Value in motion

TEMSA

Workshop manual

TEMSA

TS 45

9026-114Y

EJXU8L1

00 INDEX

Rev.00 / 25.03.14

00. FOREWORD .....

00. TOOLS .....

01. ENGINE .....

02. COOLING SYSTEM .....

03. AIR INTAKE .....

04. FAN DRIVE SYSTEM .....

05. TRANSMISSION .....

06. FRONT AXLE .....

07. REAR AXLE .....

08. FRONT SUSPENSION .....

09. REAR SUSPENSION .....

10. PROP SHAFT .....

11. PEDALS .....

12. BRAKE .....

13. STEERING .....

14. FUEL TANK SYSTEM AND EQUIPMENT .....

15. AIR LINE .....

16. EXHAUST .....

17. AIR CONDITIONING .....

18. HEATING .....

19. SEAT INSTALLATION .....

20. LIGHTS .....

21. WINDOWS .....

22. DOORS AND LIDS .....

23. INTERIOR TRIMMING .....

24. EXTERIOR TRIMMING .....

25. BODY STRUCTURE .....

26. ENGINE ROOM FIRE EXTINGUISHER .....

00 FOREWORD

Rev.00 / 25.03.14

1. ABOUT TEMSA 2

1.1. Temsa Global & the Sabancı Holding At a Glance 2

1.2. Then and Now 2

1.3. The Way Forward 3

2. GENERAL PRECAUTIONS 3

3. VEHICLE INFORMATION 4

3.1. Chassis Number 4

3.2. Vin Code 4

4. SPECIFICATIONS FOR TS 45 5

5. BEFORE START OF WORK 7

5.1. Mechanical Requested Dress Code 7

5.2. Protect seats when mechanics start working 8

6. JACKING UP THE BUS 8

7. TIGHTENING TORQUES LIST 9

8. GREASES AND LUBRICANTS LIST 10

8.1. Proposed Oil Change Intervals 10

8.2. Proposed Antifreeze & A/C Gas Change Intervals 10

8.3. Proposed Wax Norm 10

8.4. Proposed Tire Pressure Values 10

9. SYMBOL LIST 11

1. ABOUT TEMSA

1.1. TEMSA GLOBAL & THE SABANCI HOLDING AT A GLANCE

TEMSA GLOBAL is a Turkish company established in 1968 with its head office in Istanbul (Turkey). Apart from the production of buses and coaches, TEMSA GLOBAL's activities cover the construction and distribution of light commercial vehicles and the distribution of construction machinery. The company currently employs more than 2.000 people.

Temsa Global is the only automotive company selected for the TURQUALITY program that intends to create 10 well known Turkish brands in the next 10 years. Temsa Global carries out its production and sales operations in compliance with the ISO 9001-2000 Quality Management System. It was the first company in the Turkish automotive sector to receive the TS 18001 Occupational Health and Safety Management System Certificate (OHSAS) by the Turkish Standards Institute. In addition Temsa Global received the ISO 14001 Environmental Management System Certificate in 2005. Temsa Global is also the first company in Turkey within the automotive industry to comply to ISO 27001 Information Security Management System, certification of which was completed in 2007.

TEMSA GLOBAL is **part of the Tire, tire reinforcement materials and automotive business unit of Sabancı Holding. Sabancı Holding is** the parent company of the Sabancı Group, one of **Turkey's leading industrial and financial conglomerates.** In 2007, the Sabancı Group realised $14.9 billion USD consolidated revenues and a consolidated net income of $745 million USD.

1.2. THEN AND NOW

At present, TEMSA GLOBAL is Europe's second biggest independent bus & coach producer. TEMSA GLOBAL purchases its engines from a number of different suppliers (as for example DAF MAN or CUMMINS). Coaches and midi-buses manufactured by TEMSA GLOBAL are **exported to more than 40 countries**, many of which are EU member states (including France, Germany, Belgium, Italy, United Kingdom, Poland, Austria, Hungary, Greece, Bulgaria etc). In total, 75% of the buses produced by TEMSA GLOBAL are exported. The company's aim is to have a 10% market share in the European coach and midi-bus markets by 2010.

1.3. THE WAY FORWARD

TEMSA GLOBAL is determined to focus on satisfying its customers and to continue on its path of success through improvement, innovation and development with full confidence.

As one of the biggest independent bus and coach producers, taking into account the continued globalization of the automotive sector, TEMSA GLOBAL inevitably saw the need for integrating its product line with some of the worlds leading brand-name component producers. TEMSA GLOBAL will expand this cooperation with other producers, and continue to collaborate with highly reputable European consultants in an effort towards **continuous development and innovation of all its vehicles.**

In line with its vision to become a world class global brand, TEMSA GLOBAL is keen on establishing collaborations with international partners from different parts of the world to increase its presence in the commercial vehicles industry.

2. GENERAL PRECAUTIONS

Please read the rules in this Section carefully; to avoid the risk of death, injury or property damage. Qualified and trained technicians should use **The Service Information Manual**. Making repairs or service without the adequate training and using inappropriate tools and equipment may cause injury and could damage the bus. Some of the procedures require specific tools designed for specific purposes, so use the tools mentioned in the manual when necessary.

Bus service and repair must be done correctly following the structions to ensure the safety of the service technician and correct function of the bus. If a part must be replaced, the same part number or an equivalent part should be used. Pay great attention to use a replacement part of good quality.

There are **Warning**, **Caution** and **Note** statements in the Service Information which are very important for the safe service operations. Service personnel must understand these statements fully to reduce the risk of death or injury during service, repair or operations. Inappropriate service or repair may damage the bus or cause operational faults.

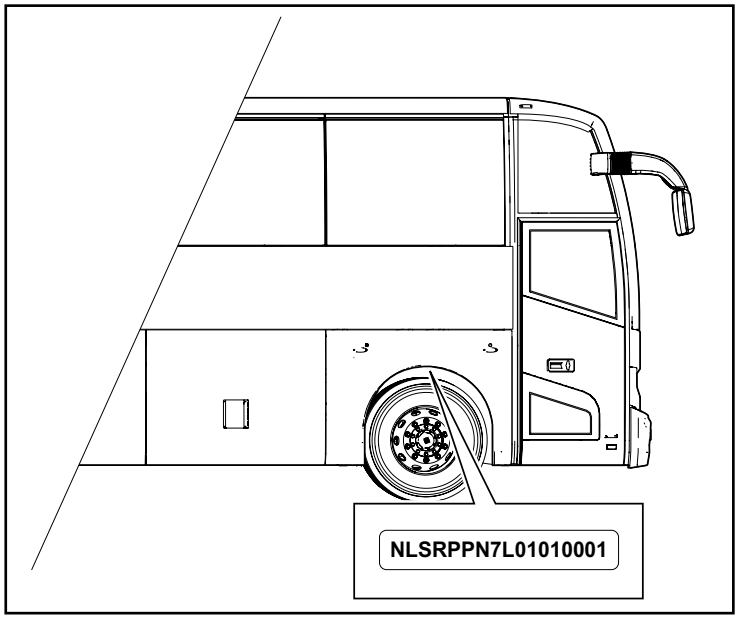

3. VEHICLE INFORMATION

3.1. CHASSIS NUMBER

Chassis number is stamped on the right side of the frame.

WARNING

Chassis number is important to know vehicle's specifications.

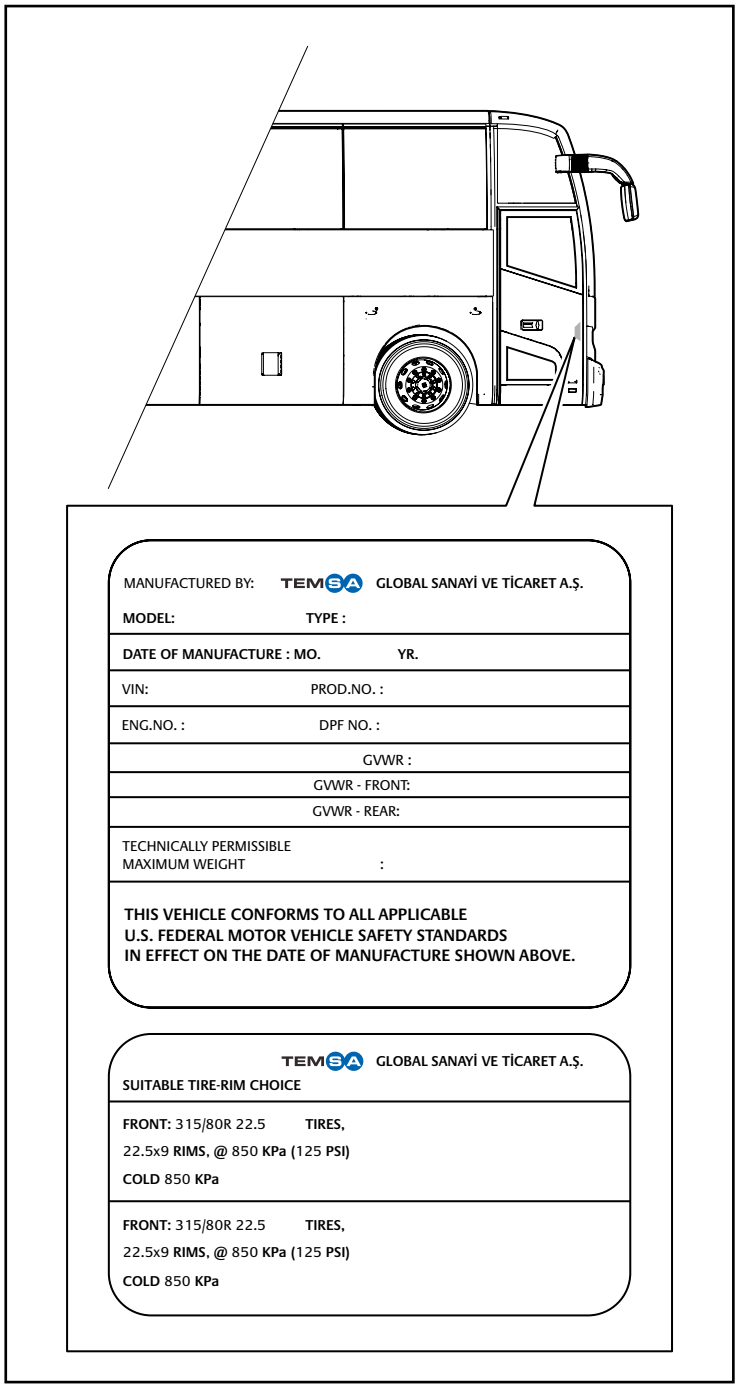

3.2. VIN CODE

Identification label is located on the area shown in the figure. The information on the label enables faster road assistance and spare parts service.

4. SPECIFICATIONS FOR TS 45

	TS45 (EJXU8L1)
Type	Longitudinal rear engine bus (semi-skeleton type)
Drive System	4 x 2
DIMENSIONS	
Overall Length	45 ft
Overall Width	102 in
Overall Height	138 in (approx.)
Turning Radius	40,2 ft
Wheelbase	310,8 in
Front Overhang	78,5 in
Rear Overhang	112 in
Body Inside Height	75,78 in
Luggage Compartment	460 ft^3
ENGINE	
Model	Cummins
Type	Diesel Turbocharged Engine
No. of Cylinder	6 in Line
Bore and Stroke	4.49 in x 5.69 in
Piston Displacement	729 in^3
Maximum Output	425 HP / 1800 rpm
Maximum Torque	1650 lb-ft / 1100 rpm
Weight Net Dry	1678 lb
Engine Cooling System	13.1 quarts
Lube Oil System	7.3 gal
Compression Ration	16.6:1
TRANSMISSION	
Model	Allison
Type	B500R
Gross Input Power	550 hp
Gross Input Torque	1700 ftlbs
Net Turbine Torque	2450 ftlbs
Full Load Governed max.	2300 rpm
Full Load Governed min.	1700 rpm
Idle Speed max.	800 rpm
Idle Speed min.	500 rpm
Transmission and Control System	Electronic Control Module (ECU)
FRONT AXLE	
Model	ZF-RL75E
Type	Independent
Capacity	15650 lb
REAR AXLE	
Model	ZF A132
Type	Ridgid
REAR AXLE	
Model	ZF RL75 A
Type	Steerable

4. SPECIFICATIONS FOR TS 45

	TS45 (EJXU8L1)
Capacity	27110 lb
Final Reduction	Single reduction, Hypoid gear
Ration	4.27
TIRES & WHEELS	
Tires	Single Front, Single Tag and Single Rear
Type	Disc Type
Tire Size	315/80 R 22.5 radial, all Steel
Loading Capacity	8267 lb/62 mph
Hub Size	11 in
STEERING	
Steering Wheel Type	ZF Servocom 8098
SUSPENSION	
Front Suspension	2 Shock Absorbers, 2 Air Bellows, Indipendent Suspension
Tag Suspension	4 Shock Absorbers, 4 Air Bellows
Rear Suspension	2 Shock Absorbers, 2 Air Bellows
BRAKES	
Service Brake	Front / Rear Disc Brakes, Full Air, ABS + ASR (ATC) + ESC + RSC
ELECTRICAL SYSTEM	
Capacity and Number of Batteries	24 Volt (2x12 Volt / 225 Ah)
Alternator	2x140 A Presto Lite (Leece Neville)
FUEL SYSTEM	
Fuel Tank Capacity	200 gal
DEF Tank Capacity	15 gal
PASSENGER CAPACITY	
Seating Arrangement	57 + 1 (max.) with Restroom

WARNING

Dress correctly to avoid injury and damage to the vehicle

5. BEFORE START OF WORK

5.1. MECHANICAL REQUESTED DRESS CODE

Always wear protective clothing. Do not wear any damaged or loose-fitting clothing and remove jewelry before starting the work. In case of long hair use hairnet.
The illustration below shows some of the correct on incorrect clothing that should been worn during work.
Sharp edges should be avoided e.g belts, watches, necklaces to prevent scatching the vehicle.

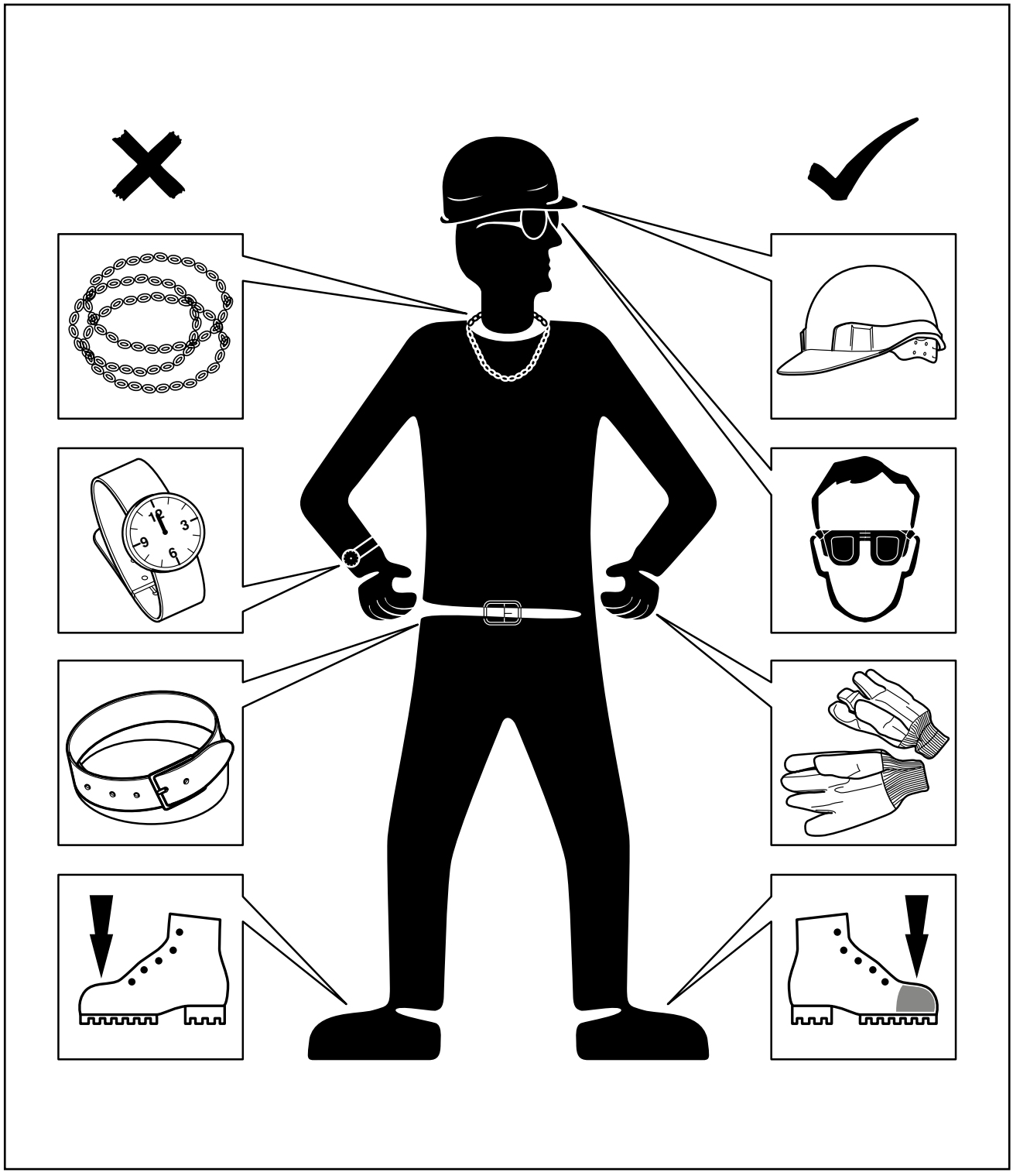

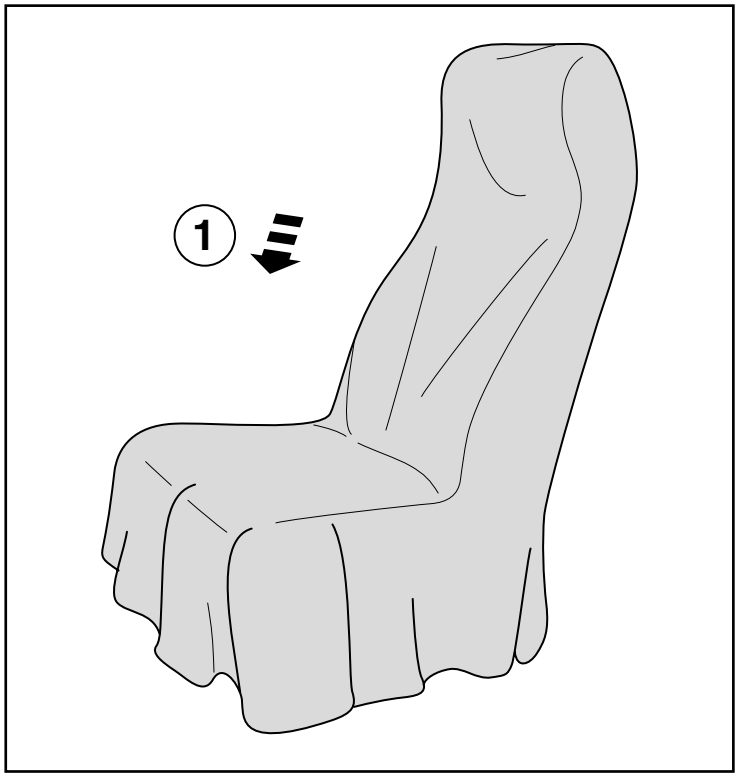

5.2. PROTECT SEATS WHEN MECHANICS START WORKING

1. Seats, trimming, upholstery stuff and carpeting should be protected with appropriate coverings.

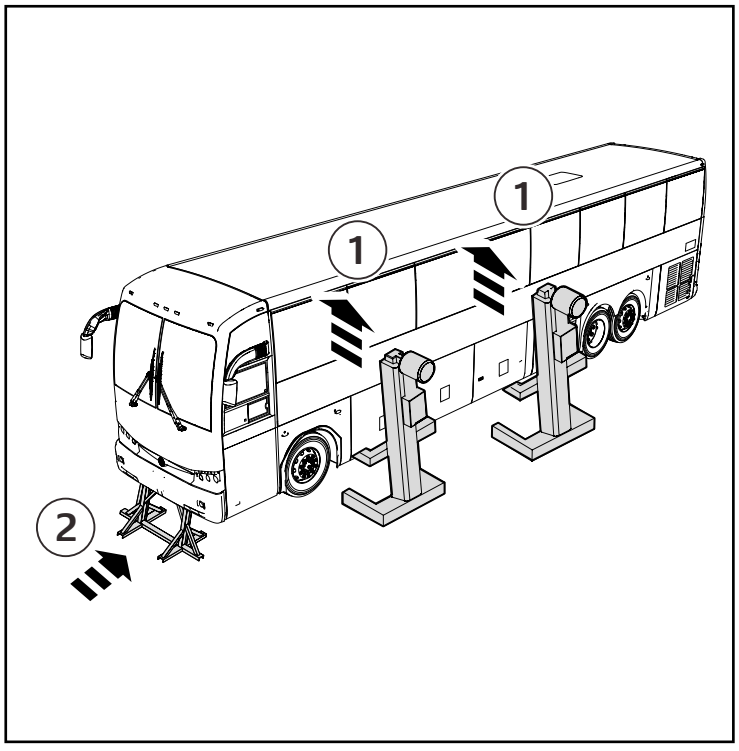

6. JACKING UP THE BUS

1. Lift up the vehicle with the lifting jack.
2. Support the frame by rigid rack after lifting bus.

WARNING

- Support the vehicle securely so it does not move.
- Do not remove the support until the entire operation is completed.

7. TIGHTENING TORQUES LIST

Quality	8.8		10.9		12.9	
	Nm	**Ft-Lbs**	**Nm**	**Ft-Lbs**	**Nm**	**Ft-Lbs**
M4	3	2.2	4,4	3.2	5	3.7
M5	5,9	4.4	8,7	6.4	10	7.4
M6	10	7.4	15	11.1	18	13.3
M8	25	18.4	36	26.6	43	31.7
M8 x 1,00	**22**	**16.2**	**30**	**22.1**	**36**	**26.6**
M10	49	36.1	72	53.1	84	62.0
M10 x 1,25	**42**	**31.0**	**59**	**43.5**	**71**	**52.4**
M12	85	62.7	125	92.2	145	107.0
M12 x 1,25	**76**	**56.1**	**105**	**77.4**	**130**	**95.9**
M14	135	99.6	200	147.5	235	173.3
M14 x 1,50	**120**	**88.5**	**165**	**121.7**	**200**	**147.5**
M16	210	154.9	310	228.7	365	269.2
M16 x 1,50	**180**	**132.8**	**250**	**184.4**	**300**	**221.3**
M18	300	221.3	430	317.2	500	368.8
M18 x 1,50	**260**	**191.8**	**365**	**269.2**	**435**	**320.9**
M20	425	313.5	610	449.9	710	523.7
M20 x 1,50	**360**	**265.5**	**510**	**376.2**	**610**	**449.9**
M22	580	427.8	820	604.8	960	708.1
M22 x 1,50	**480**	**354.0**	**680**	**501.6**	**810**	**597.5**
M24	730	538.4	1050	774.5	1220	899.9
M24 x 2,00	**610**	**449.9**	**860**	**634.3**	**1050**	**774.5**
M27	1100	811.4	1550	1143.3	1800	1327.7
M30	1450	1069.5	2100	1549.0	2450	1807.1
M33	1970	1453.1	2770	2043.1	3330	2456.2
M36	2530	1866.1	3560	2625.9	4280	3156.9

8. GREASES AND LUBRICANTS LIST

8.1. PROPOSED OIL CHANGE INTERVALS

	Class	Norm	Capacity	Changing Period (Year)
Engine Oil – Cummins	SAE 15W-40	API CH-4	27.4 lt	6 Month
Automatic Transmission Oil (Allison)	AUTRAN MBX	GM DEXRON ||| H Allison C4	25 lt	3
Differantial Oil	SAE 80W 90	ZF TE-ML 05A	16 lt	2
Power Steering Fluid	MBX DEXRON ||	MAN 339 Z1	8 lt	2
A/C Compressor	SE55 (Esther Oil)	DEA Rensio Triton	2.5 lt	-
Hub Grease	Fuchs Renolit LX-PEP 2	MAN 284 Li-H 2	1.5 kg	4
Fuel	Ultra Low Sulfur Diesel	ASTM D 2622		

8.2. PROPOSED ANTIFREEZE & A/C GAS CHANGE INTERVALS

	Class	Norm	Capacity	Changing Period (Year)
Antifreeze	MS 996047 Y	CAT DEAS SNF	40 lt	4
A/C Gas	R 134 A	-	8.5 kg	1

8.3. PROPOSED WAX NORM

	Class	Norm	Capacity	Changing Period (Year)
Wax	-	-	Efcoat	WB 463 A1

8.4. PROPOSED TIRE PRESSURE VALUES

		Class		
Pressure	Front	8.3 bar	Rear	8.3 bar

9. SYMBOL LIST

Operating Instructions in this manual includes the folowing symbols, warning words and signs:



CAUTION

This symbol is used in conditions which may cause damage or injury if necessary measures are not taken.



WARNING

This symbol is used in conditions which may cause severe damage or fatal injury if necessary measures are not taken.



DANGER

This symbol is used to indicate danger.



VISUAL INSPECTION

This symbol is used to inform the user that a visual inspection is necessary.

00 TOOLS

Rev.00 / 25.03.14

01 ENGINE 2
02 COOLING SYSTEM 3
03 AIR INTAKE 4
04 FAN DRIVE SYSTEM 5
05 TRANSMISSION 6
06 FRONT AXLE 7
07 REAR AXLE 8
08 FRONT SUSPENSION 9
09 REAR SUSPENSION 10
10 DRIVE SHAFT 11
11 PEDALS 12
12 BRAKE 13
13 STEERING 14
14 FUEL TANK & EQUIPMENT 15
15 AIR LINES 16
16 EXHAUST SYSTEM 17
17 AIR CONDITIONER 18
18 HEATING 19
19 SEAT INSTALL 20
20 LIGHTS 21
21 WINDOWS 22
22 DOORS & LIDS 23
23 INTERIOR TRIMMING 24
24 EXTERIOR TRIMMING 25
25 BODY STRUCTURE 26
26 FIRE EXTINGUISHER 27

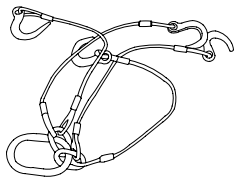

Manil Rope

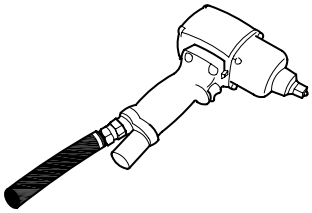

Impact Wrenches

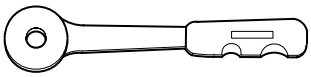

Drive Tools

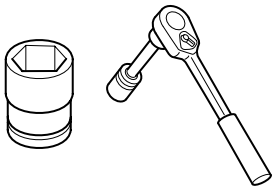

Impact Socket

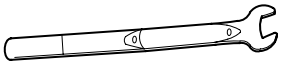

Torque Wrench



Torque Wrench 200 Nm

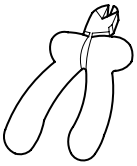

Stripping Plier

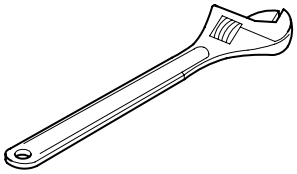

Adjustable Wrench

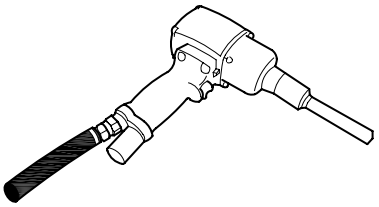

Drill



Hexagonal Keys 5

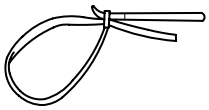

Strap Wrench

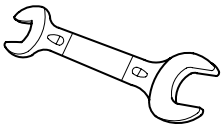

Open Wrench Double Ended

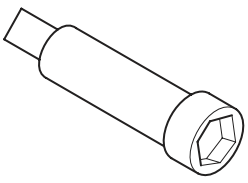

Short Arm

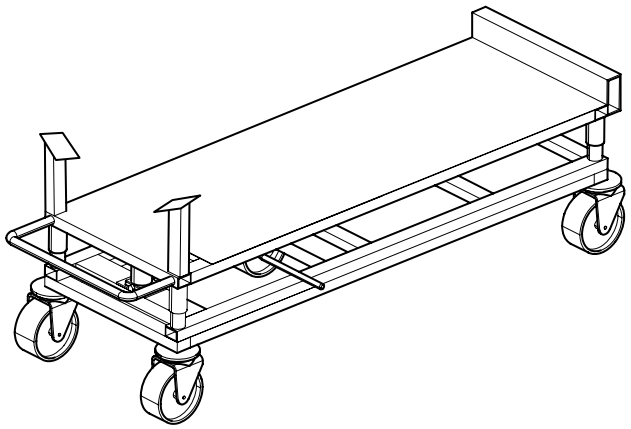

Engine Jack

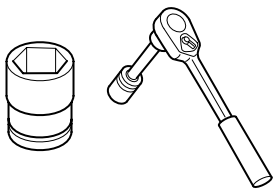

Impact Socket

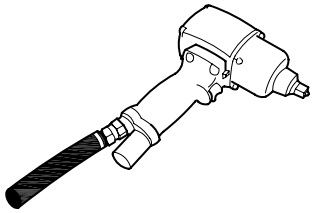

Impact Wrenches

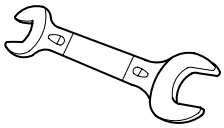

Open Wrench Double Ended

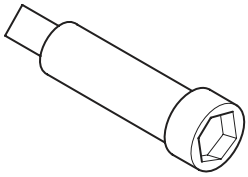

Short Arm

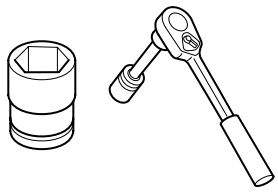 Impact Socket	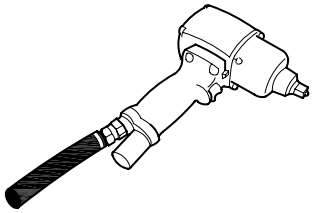 Impact Wrenches	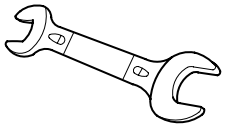 Open Wrench Double Ended
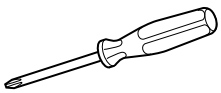 Screw Driver		

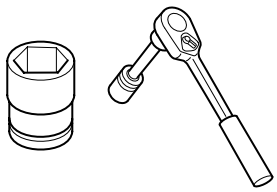 Impact Socket	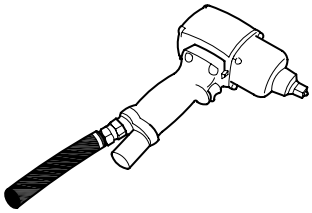 Impact Wrenches	 Hexagonal Keys 5
 T 45 Key	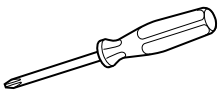 Screw Driver	

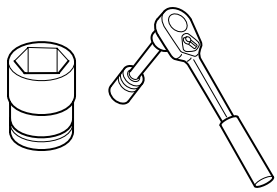

Impact Socket

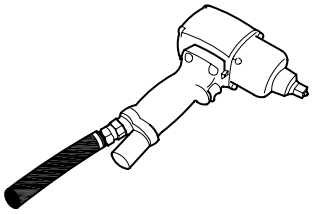

Impact Wrenches

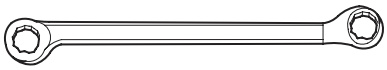

Double Ended Ring Spanner

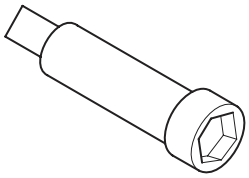

Short Arm

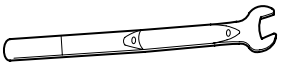

Torque Wrench

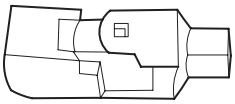

Universal Joint

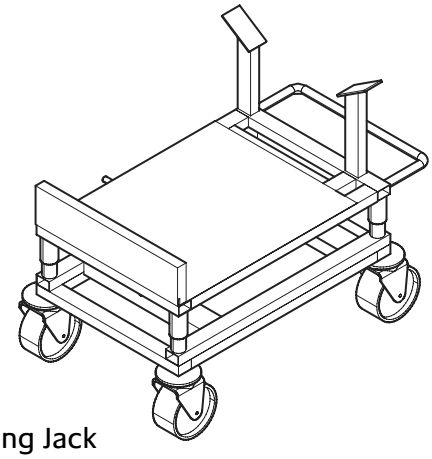

Transmission Carrying Jack



Torque Wrench 200 Nm

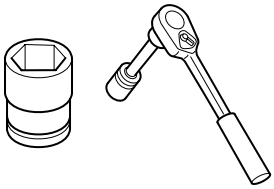

Impact Socket

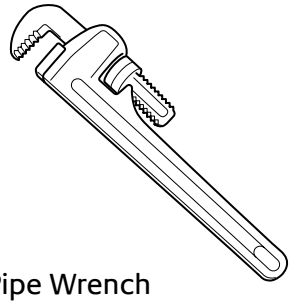

Pipe Wrench

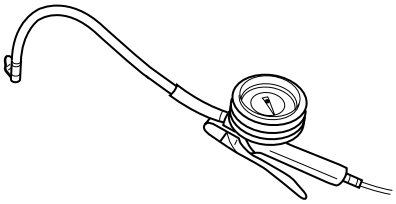

Tire Pressure Equipment

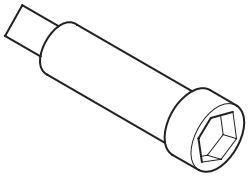

Short Arm

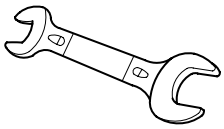

Open Wrench Double Ended



Torque Wrench 200 Nm

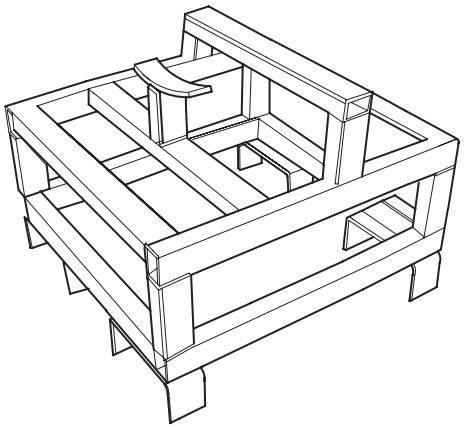

Front Axle Carrying Jack

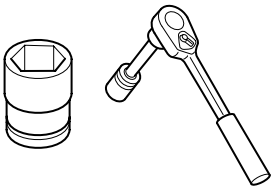

Impact Socket

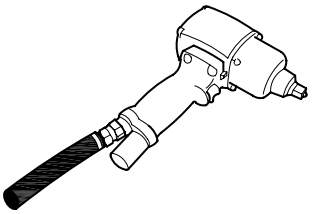

Impact Wrenches



Double Ended Ring Spanner

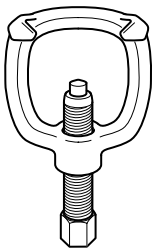

Puller

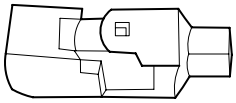

Universal Joint

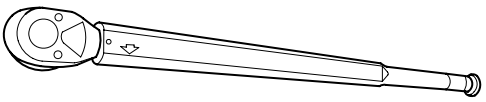

Torque Wrench 200 Nm

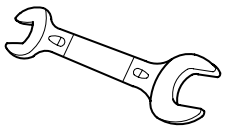

Open Wrench Double Ended

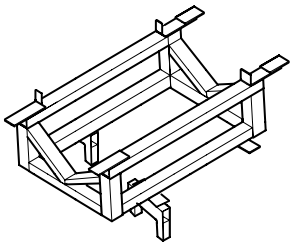

Rear Axle Carrying Jack

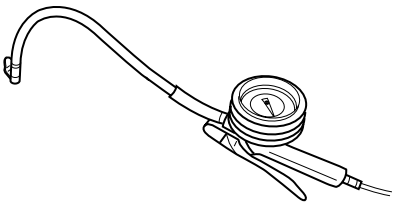

Tire Pressure Equipment

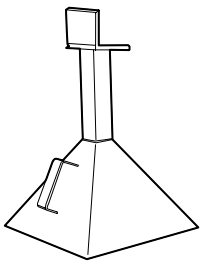

Rigid Rack

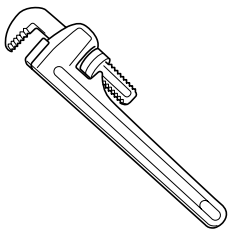

Pipe Wrench

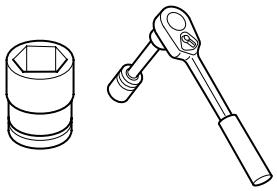

Impact Socket

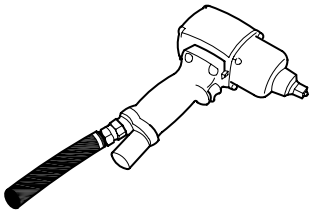

Impact Wrenches

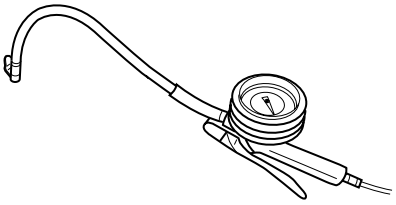

Tire Pressure Equipment

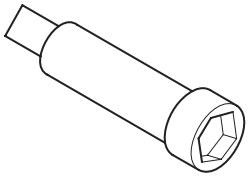

Short Arm

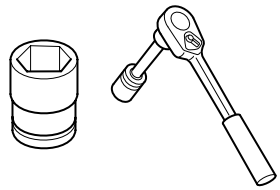	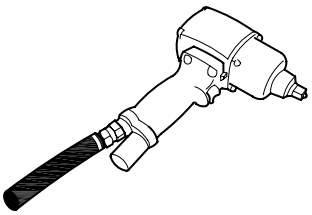	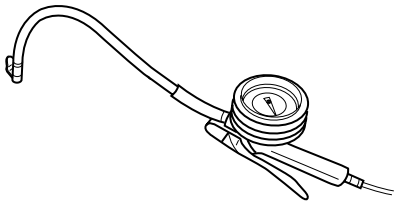
Impact Socket	Impact Wrenches	Tire Pressure Equipment

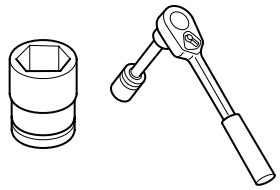 Impact Socket	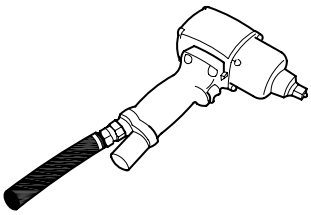 Impact Wrenches	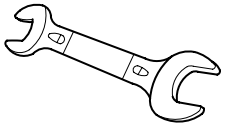 Open Wrench Double Ended
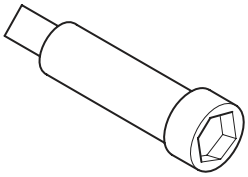 Short Arm	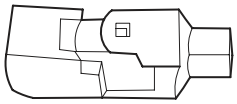 Universal Joint	 Torque Wrench 200 Nm

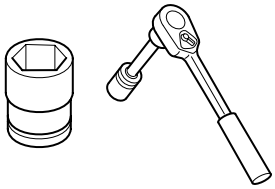 Impact Socket	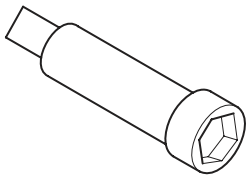 Short Arm	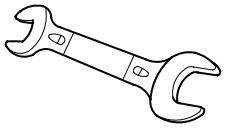 Open Wrench Double Ended

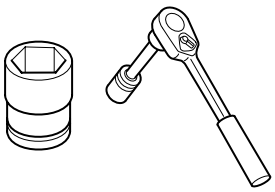

Impact Socket

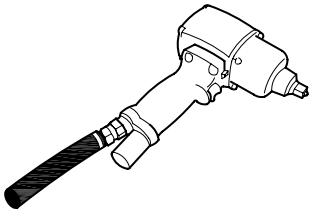

Impact Wrenches

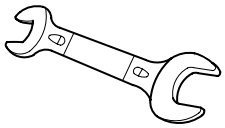

Open Wrench Double Ended

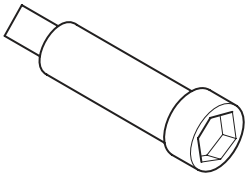

Short Arm

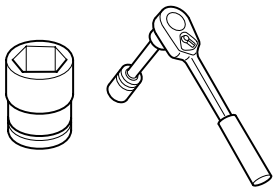

Impact Socket

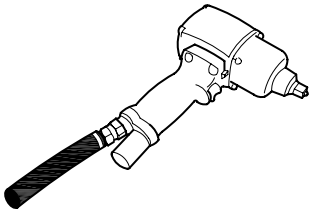

Impact Wrenches



Hexagonal Keys 5

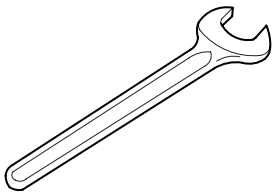

Open Wrench

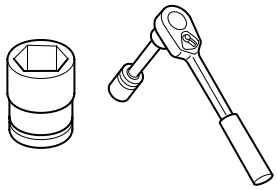	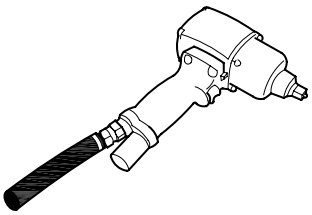	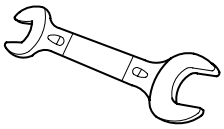
Impact Socket	Impact Wrenches	Open Wrench Double Ended
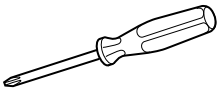	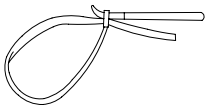	
Screw Driver	Strap Wrench	Double Ended Ring Spanner

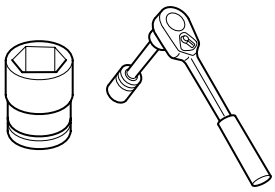

Impact Socket

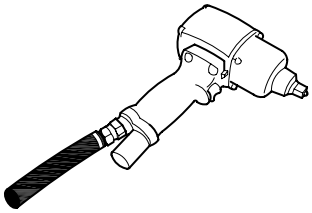

Impact Wrenches

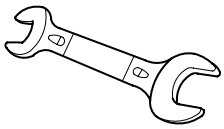

Open Wrench Double Ended

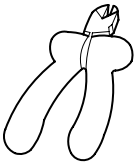

Stripping Plier

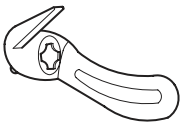

Polyemide Scissors



Double Ended Ring Spanner

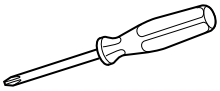

Screw Driver

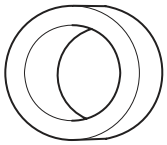

Band

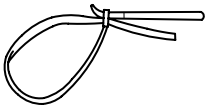

Strap Wrench

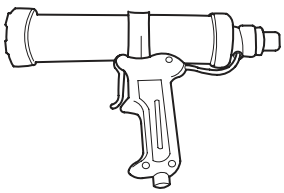

Sealer Machine

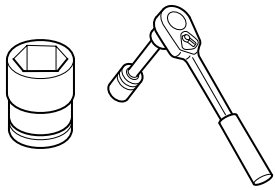 Impact Socket	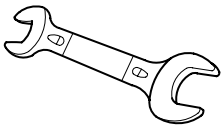 Open Wrench Double Ended	 Double Ended Ring Spanner

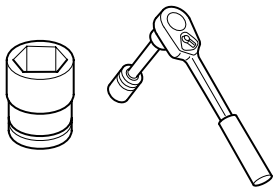 Impact Socket	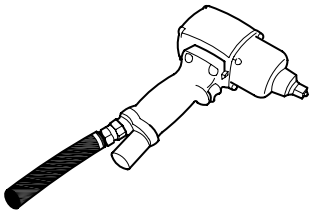 Impact Wrenches	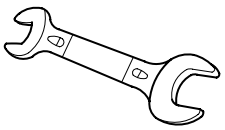 Open Wrench Double Ended
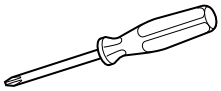 Screw Driver	 Sonic	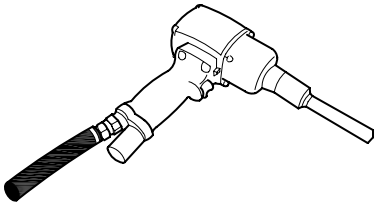 Drill
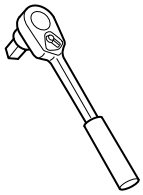 Rachet Lever	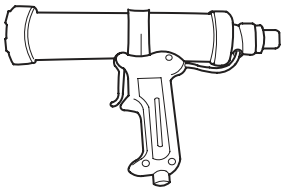 Sealer Machine	

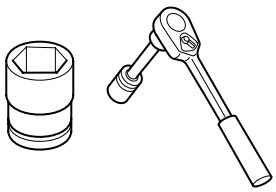 Impact Socket	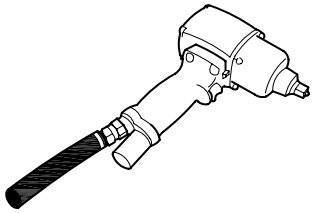 Impact Wrenches	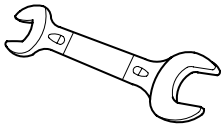 Open Wrench Double Ended
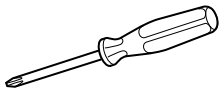 Screw Driver	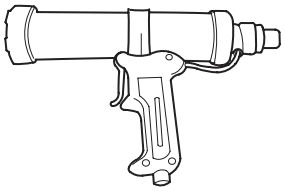 Sealer Machine	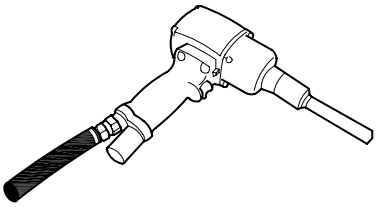 Drill
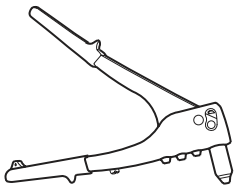 Rivet Machine	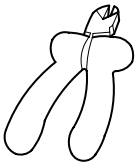 Stripping Plier	

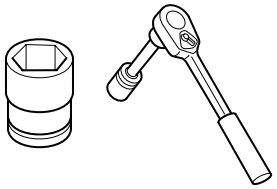 Impact Socket	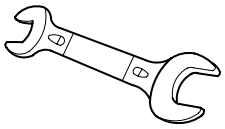 Open Wrench Double Ended	

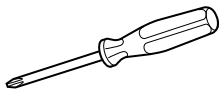

Screw Driver

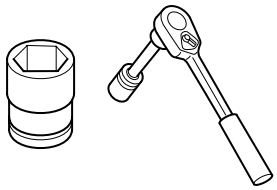 Impact Socket	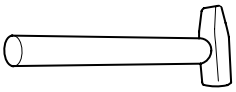 Hammer	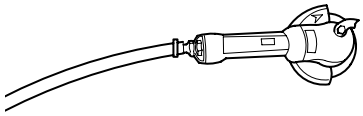 Grinder
 Gasoline	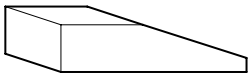 Chock	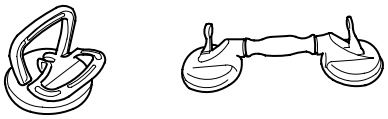 Rubber Suction
 Activator	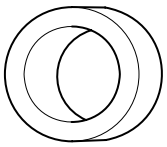 Band	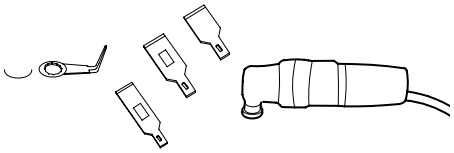 Sealer Cutting Machine
 Primer	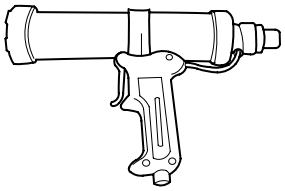 Sealer Machine	

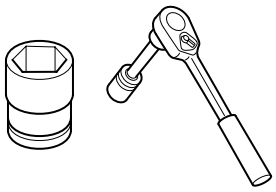 Impact Socket	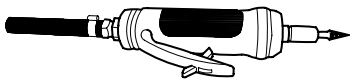 Sonic	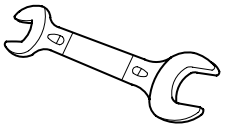 Open Wrench Double Ended
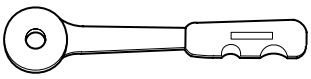 Drive Tools	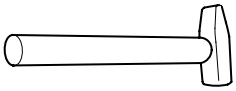 Hammer	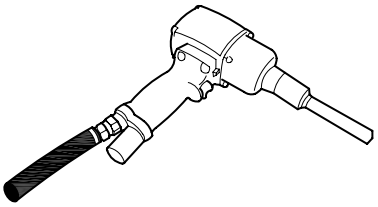 Drill
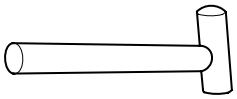 Plastic Hammer	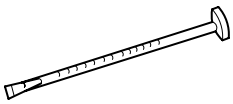 Chisel	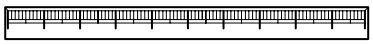 Steel Ruler
 Hexagonal Keys 5	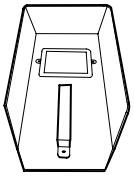 Welding Mask	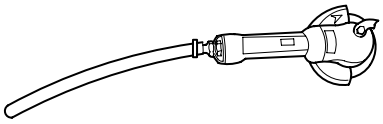 Grinders
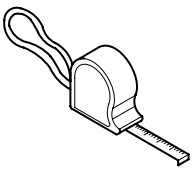 Meter	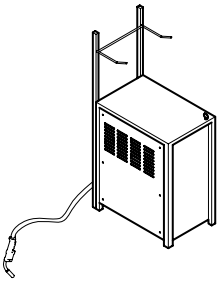 Mig Welding Machine	

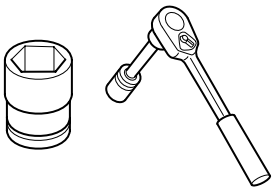

Impact Socket

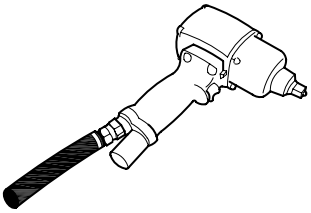

Impact Wrenches

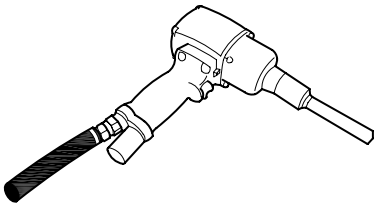

Drill

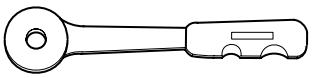

Drive Tools

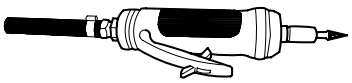

Sonic

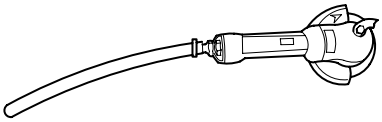

Grinders

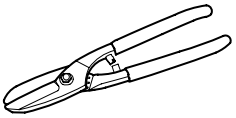

Metal Sheet Scissors

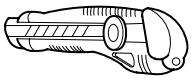

Cutter

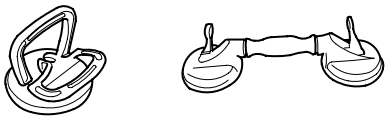

Rubber Suction

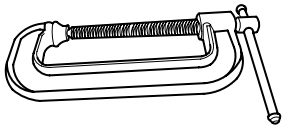

Clump

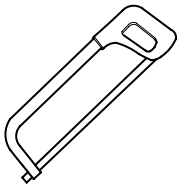

Saw

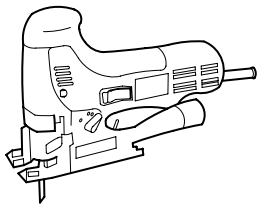

Jig Saw

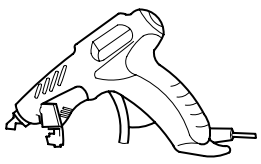

PVC Machine

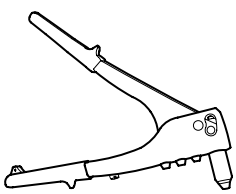

Rivet Machine

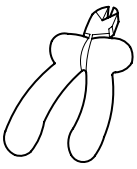

Stripping Plier



Adhesive Material Cup

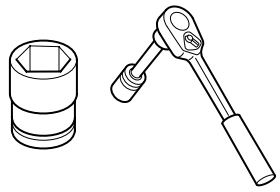 Impact Socket	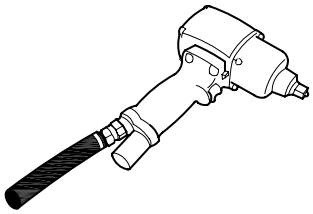 Impact Wrenches	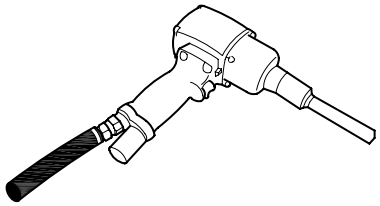 Drill
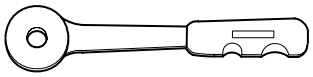 Drive Tools	 Sonic	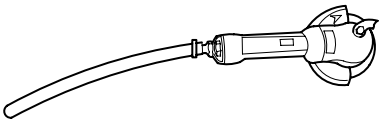 Grinders
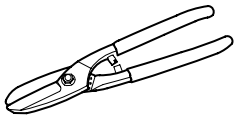 Metal Sheet Scissors	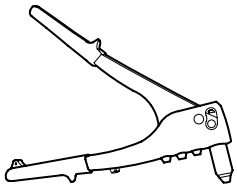 Rivet Machine	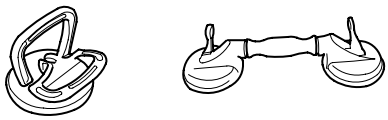 Rubber Suction
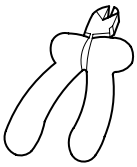 Stripping Plier	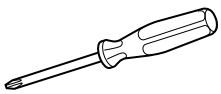 Screw Driver	 Adhesive Material Cup

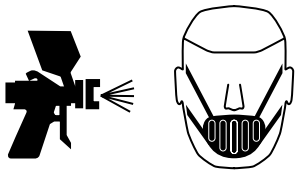 Spray Gun	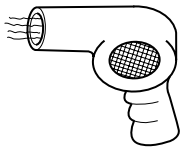 Dryer

	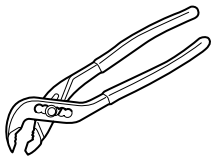	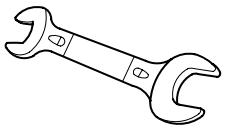
Hexagonal Key 6	Adjustable Wrench	Open Wrench Double Ended

01 ENGINE

Rev.00 / 25.03.14

1. TOOLS 3

2. SPECIFICATIONS 4

2.1. Specifications – Cummins Engine 4

3. STRUCTURE AND OPERATION 5

3.1. Safety Instruction 5

3.2. Start-Up Instruction 6

3.3. Welding On The Chassis 7

3.3.1 Welding On The Chassis – Areas On Chassis Where Welding Is Not Permitted 9

3.4. Assembly View Of The Engine – Allison Transmission 10

4. SERVICE PROCEDURE 11

4.1. Removing The Engine 11

4.2 Exploded View Of The Engine Assy – Cummins 25

4.3. Installation Of The Engine 26

4.4. Removing The Alternator – Cummins Engine 27

4.5. Removing The Water Pump 28

GENERAL

- If work is performed by people who do not have the necessary training to carry out the work or if this information is handled carelessly or totally ignored, this may result in severe injury and/or death. Inaddition, serious damage to the vehicle may occur.
- Always read the safety instructions in full before starting certain operations. The safety instructions stipulate which aspects must be considered to achieve maximum safety. The information is given that is very important for health and safety.
- Always work in adequately ventilated rooms with sufficient lighting, free from dirt and clutter. Never leave tools or parts lying around, keep away from (high-) voltage sources that present a risk of short-circuiting. Always wear protective clothing. Do not wear any damaged or loose-fitting clothing and remove jewelry before starting the work. In case of long hair use hairnet.

1. TOOLS

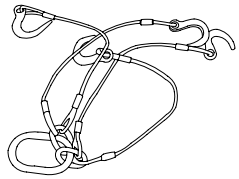 Manil Rope	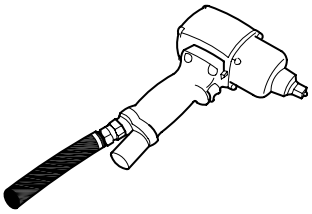 Impact Wrenches	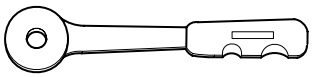 Drive Tools
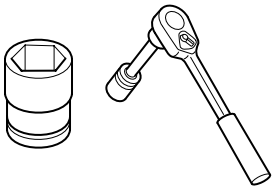 Impact Socket	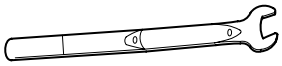 Torque Wrench	 Torque Wrench 200 Nm
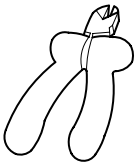 Stripping Plier	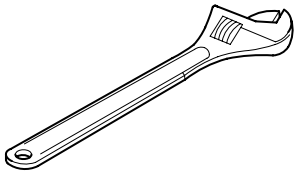 Adjustable Wrench	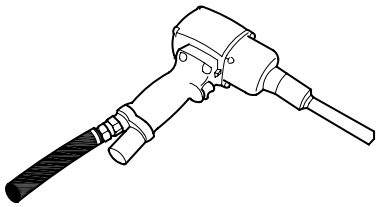 Drill
 Hexagonal Keys 5	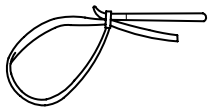 Strap Wrench	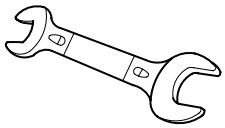 Open Wrench Double Ended
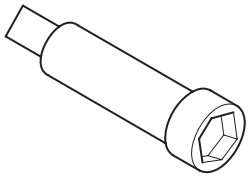 Short Arm	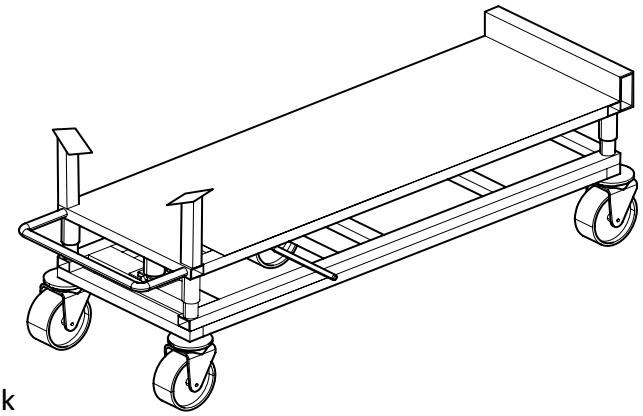 Engine Jack	

2. SPECIFICATIONS

2.1. SPECIFICATIONS – CUMMINS ENGINE

ENGINE	
Model	Cummins
Type	Diesel Turbocharged Engine
No. of Cylinder	6 in Line
Bore and Stroke	4.49 in x 5.69 in
Piston Displacement	729 in^3
Maximum Output	425 HP / 1800 rpm
Maximum Torque	1650 lb-ft / 1100 rpm
Weight Net Dry	1678 lb
Engine Cooling System	13.1 quarts
Lube Oil System	7.3 gal
Compression Ration	16.6:1

3. STRUCTURE AND OPERATION

3.1. SAFETY INSTRUCTION

Hereby declares that:

- Engines to which this declaration applies do **NOT** (completely) comply with the regulation of the Machineguideline 98/37/EC. The product is appropriate to be assembled in or with other machines till a complete product on which the mentioned guideline is to be applicable.
- Guideline 98/37/EC as most recently amended applies to engines intended to be built as parts into a machine or to be assembled with other machines to form a machine.
- These engines individually therefore do not comply in every respect with the provisions of the aforementioned guideline.
- It is forbidden to put aforementioned product into use before the machine into which it is built or of which it will be part has been found and declared to be in compliance with the provisions of the machine guideline and with the national legislation designed to implement this guideline.

General:

- Always work with high-quality tools and use them in the correct prescribed manner. Never replace original parts or fastening parts by imitations or parts of a quality other than that originally fitted.
- Do not leave the engine running in a closed or unventilated room. Make sure there are adequate extraction facilities for the exhaust gases. When a new engine is started, paint may come loose from the V-belt, loose parts may be flung off or fluid can be released.Always wear protective clothing, particularly face protection.
- Don't repair vehicle when engine is running.

Components:

- Maintain a safe distance from rotating and/or moving components. When removing or fitting heavy components, always use lifting gear made for that purpose or approved hoisting tools. Always fasten the component properly to the hoisting or lifting gear.

Fluids & Lubricants:

- Take care when working on systems that may be under pressure, such as hydraulic, fuel and cooling systems, etc. Do not remove the cooling-system filler cap while the engine is running and at operating temperature. Coolant, hydraulic oil and the various kinds of lubricants that are used for the vehicle or the engine may be harmful to health in the event of physical contact. The instructions shown on the packaging of these fluids and/or lubricants must be observed at all times. To prevent (risk of) fire, no highly flammable fluids may be used near the engine. Always collect leaking fuel in a suitable container.



CAUTION

Where the warning symbol shown opposite appears, information is provided that is essential for the mechanic's health and safety. This warning symbol is also shown where circumstances occur that could endanger vehicle safety or damage the vehicle. Observe all warning and safety instructions that are given in the safety instructions. Always read the warnings and directions given in the safety instructions and on labels and stickers affixed for your safety and health. Do not ignore them!



CAUTION

When changing oil: hot oil can cause severe physical injury.

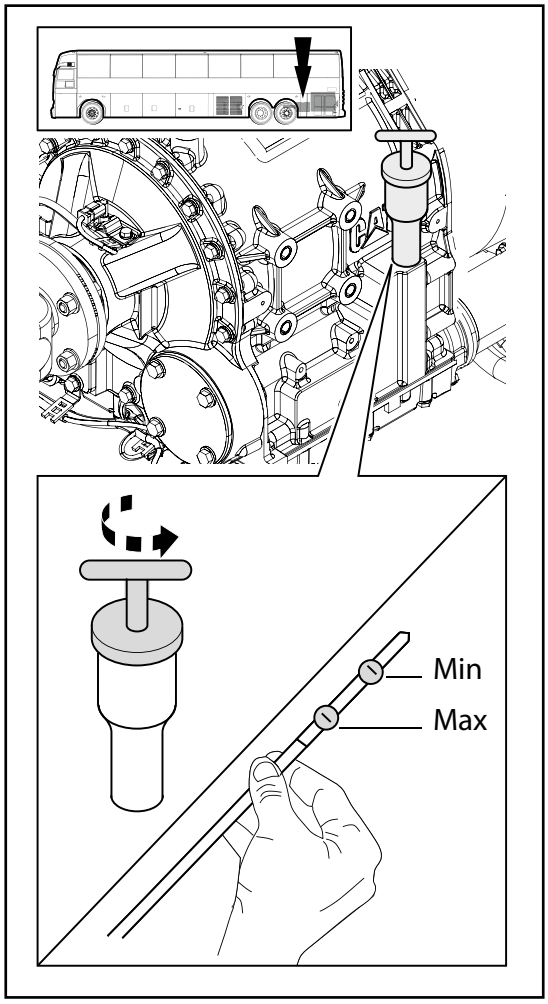

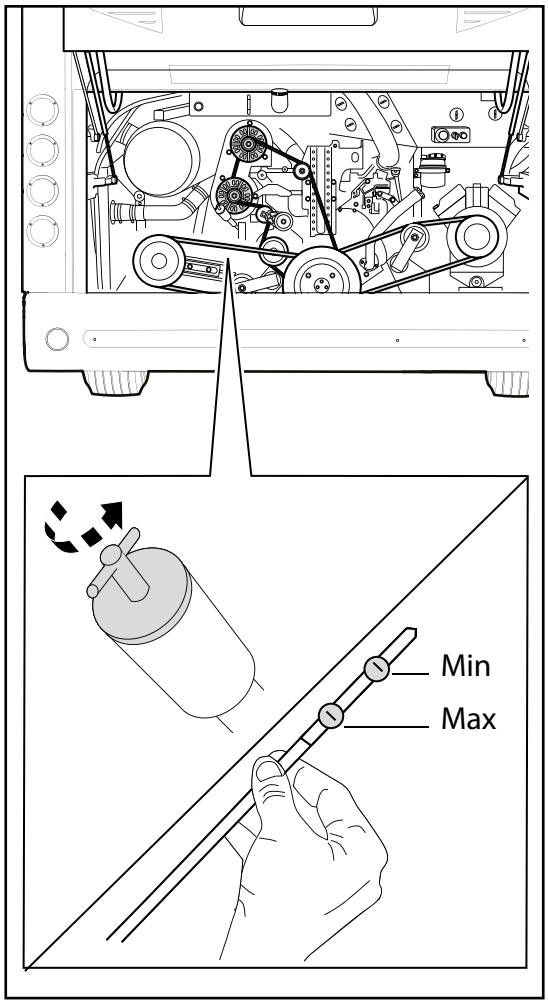

3.1. SAFETY INSTRUCTION

Electronic System:

- Always disconnect the battery's earth connection when working on the vehicle. Caution: Never loosen the battery terminal while the engine is running. Due to the sudden load change on the alternator it could generate a peak voltage and thus damage electrical components.

3.2. START-UP INSTRUCTION

Check Installation:

The following aspects must have been checked. They are shown below in the correct order. Always read this checklist in full before starting the operations. The following points must be performed by the person starting the engine, since this is the only way to ensure that all of them have been properly checked. Always observe the information shown on safety cards and stickers.

Before the engine is started:

1. General visual inspection: Check the entire installation visually. Examine carefully whether the engine mounting has been secured according to instructions and that hoses and wiring are sufficiently far away from exhaust and moving/rotating parts. Look carefully for any loose oil and water lines, couplings and loose drive belts or (poly) V-belts.
2. Coolant level: Check that the engine is completely filled with coolant.
3. Oil level: Make sure the vehicle is on a flat, horizontal surface. Check the oil level by taking out the dip stick, cleaning it with a lint-free cloth, replacing it in the holder and then again taking it out of the holder and reading off the oil level. The oil level must always be between the two marks. If necessary, add oil through the filler opening.Always use oil of the same make and the same type. Be very careful not to add too much oil.
4. Check Axial play: Check if there is enough axial play on the crankshaft after the transmission has been mounted. This must be between approx. 0.25 and 0.06 mm.
5. Check Starting switch: Make sure that the starting switch is not locked in some way.
6. Check battery cables: B - cable properly connected to battery min pole and central grounding point on engine. B+ cable properly connected to battery plus pole and starter motor terminal. Check battery cables to vehicle main switch. (if applicable)
7. Disengage the driveline: Press down the clutch pedal or actuate the release cylinder so that the engine can run freely and the starter motor does not drive the gearbox during starting. Also put the gearbox in "neutral". This also means that the vehicle cannot suddenly start moving during starting.

3.2. START-UP INSTRUCTION

Starting the engine:
When starting the vehicle, make sure that the engine fires within 20 seconds and in any event never continue starting without interruption for more than 1 minute. This is to prevent the starter motor from overheating.

Engine is running:
1. Oil pressure: If the oil-pressure sensor indicates no pressure, stop the engine at once, find the cause of the problem and then correct it before going through the entire starting procedure in full.
2. Coolant level: Check the coolant level while the engine is running. If the system contains air anywhere, vent it with the engine running. This will reduce the coolant level. If the level is too low, it must be filled to the correct level. The system is under pressure, so first turn as far as the safety, let the pressure escape and then turn the cap until it comes off.
3. Leak checks: Check the engine for leaks. Oil, fuel or coolant may be leaking somewhere even though this does not happen when the engine is stopped. If this is the case, stop the engine and locate and correct the cause. Then perform starting procedure again.
4. Engine noises and vibrations: Check the engine for unusual noises or abnormal vibrations. If they occur, stop the engine and locate and correct the cause. Then perform the starting procedure again.
5. Fast idling: If everything is in order, the engine can slowly be made to idle rapidly. Continue to check for leaks and unusual noises and vibrations. If they occur, stop the engine, locate and correct the problem and then perform the starting procedure again.

Stop engine:
If all of these steps have been performed without error or problems the engine may be turned off and the installation for starting the engine is in order. Remember however that a new engine has to be run in before being subjected to maximum load. Instructions for running in are given in the engine instruction booklet.

3.3. WELDING ON THE CHASSIS

Chassis Material
DIN 1.4003 type stainless steel tubes and bended sheets are used. In some specific areas st-52 (DIN 1.0421) type material parts exist.

Welding Material
- DIN 8556: SG-X2CrNi 19 9
- AWS A5.9:ER 308 L Si
- EN 12072: G - 199 L Si

Welding Gas
- 97,5 % Ar + 2,5 O2

Welding Method
- MIG,MAG, TIG, Electrical Arc Welding

Not Permissible welding area on chassis
- 3.3.1 shows the areas that can not be welded. The other parts on chassis not shown are accepted as critical parts which can be welded on only by the operators authorized by Temsa.

3.3. WELDING ON THE CHASSIS



CAUTION

If the connectors are not disconnected, serious damage may be caused to the electronic parts of various vehicle systems.

The following welding instructions should be observed at all times:

- Always disconnect the batteries (starting with the negative lead).
- Disconnect the connectors of electrical and electronic equipment (sensors and actuators) and the battery terminals if they are less than 1 meter away from the chassis part to be welded or the earth terminal of the welding equipment.
- Disconnect the connectors between engine and vehicle.
- Disconnect the connectors of electrical and electronic equipment if they are less than 50 cm away from the part to be welded or the earth terminal of the welding equipment.

General:

- The earth terminal should never be attached to vehicle components such as engine, axles and springs. Arcing on these parts is not permitted, because of the risk of damage to bearings, springs, etc.
- The earth terminal must make good contact and be placed as close as possible to the part to be welded.
- Plastic pipes, rubber parts and parabolic springs should be well protected against welding spatter and temperatures higher than 70°.
- The contact switch must not be in the accessory or contact position. The contact key should be removed.
- Reconnect in reversed order of disconnecting. Ensure that a good earth connection is made between chassis, engine and cab.

3.3.1 WELDING ON THE CHASSIS – AREAS ON CHASSIS WHERE WELDING IS NOT PERMITTED

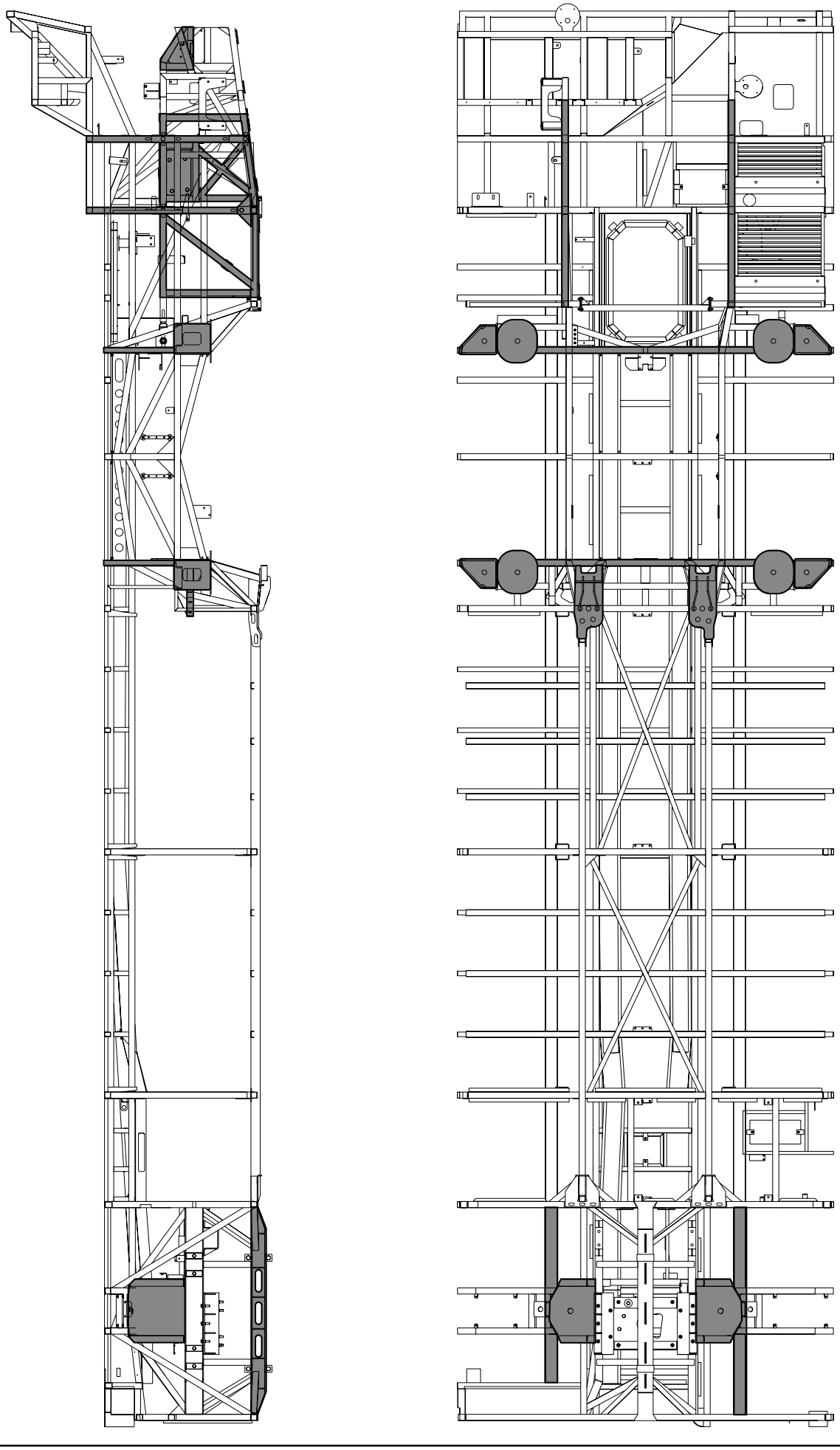

3.4. ASSEMBLY VIEW OF THE ENGINE – ALLISON TRANSMISSION

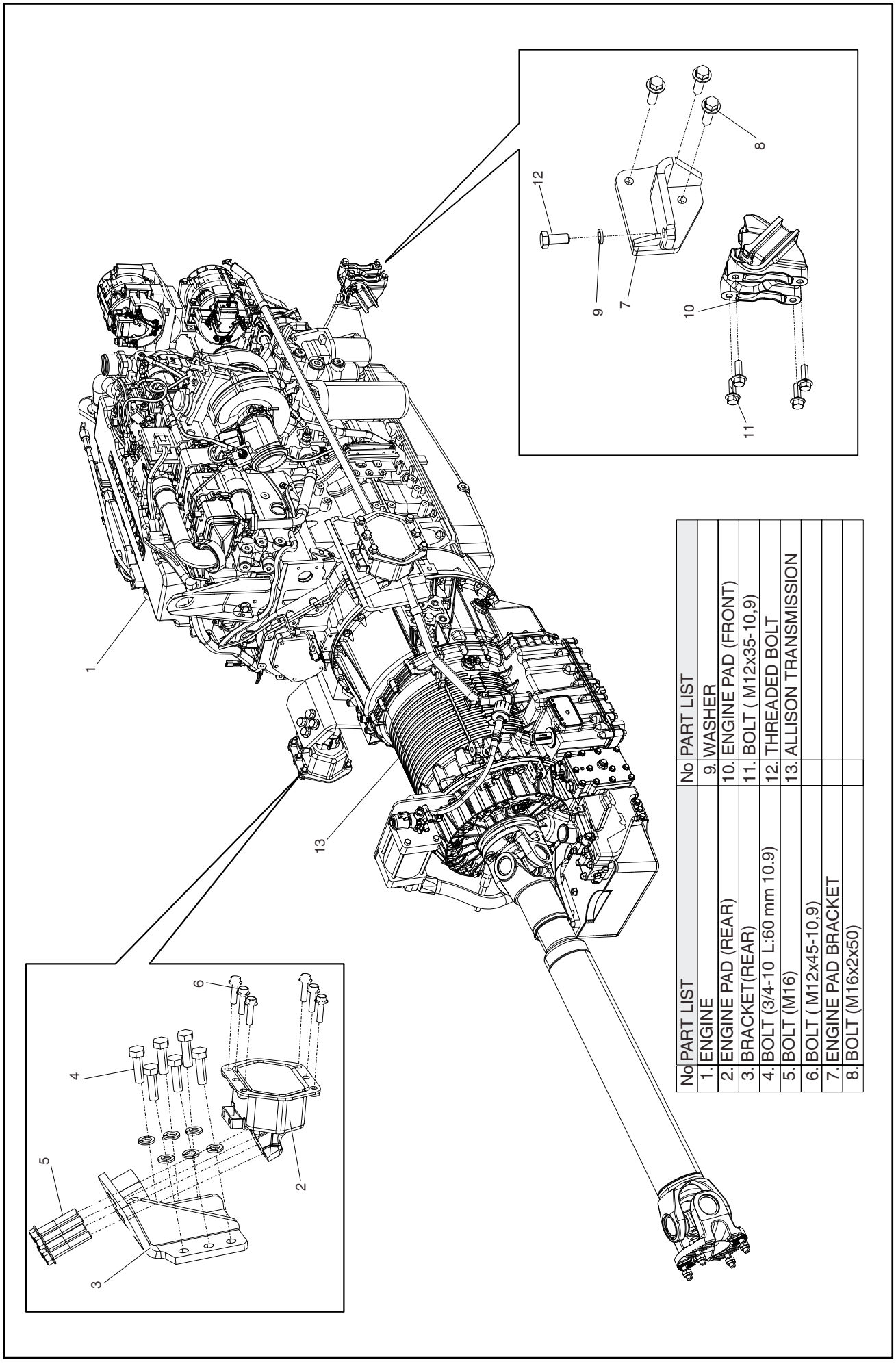

No	PART LIST
1.	ENGINE
2.	ENGINE PAD (REAR)
3.	BRACKET(REAR)
4.	BOLT (3/4-10 L:60 mm 10.9)
5.	BOLT (M16)
6.	BOLT (M12x45-10,9)
7.	ENGINE PAD BRACKET
8.	BOLT (M16x2x50)

No	PART LIST
9.	WASHER
10.	ENGINE PAD (FRONT)
11.	BOLT (M12x35-10,9)
12.	THREADED BOLT
13.	ALLISON TRANSMISSION

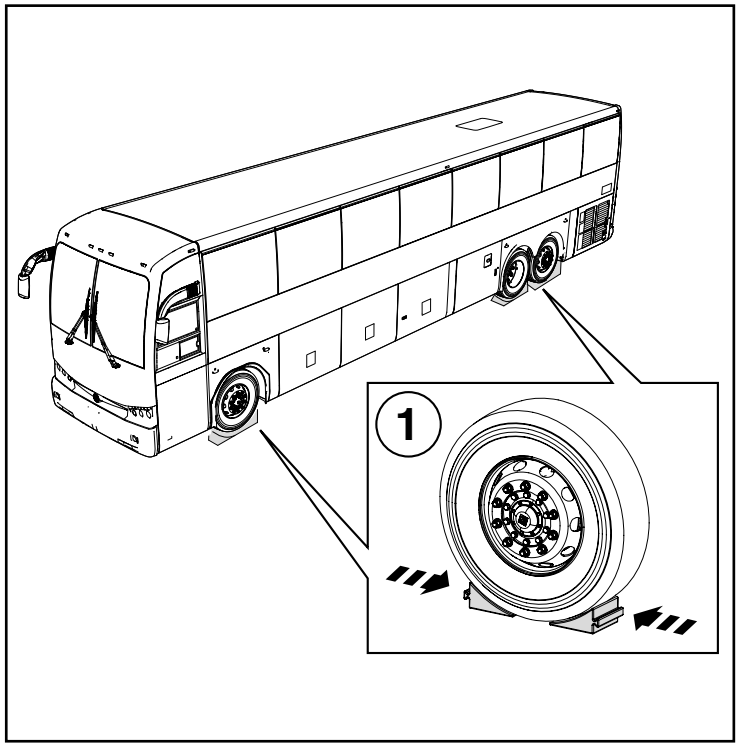

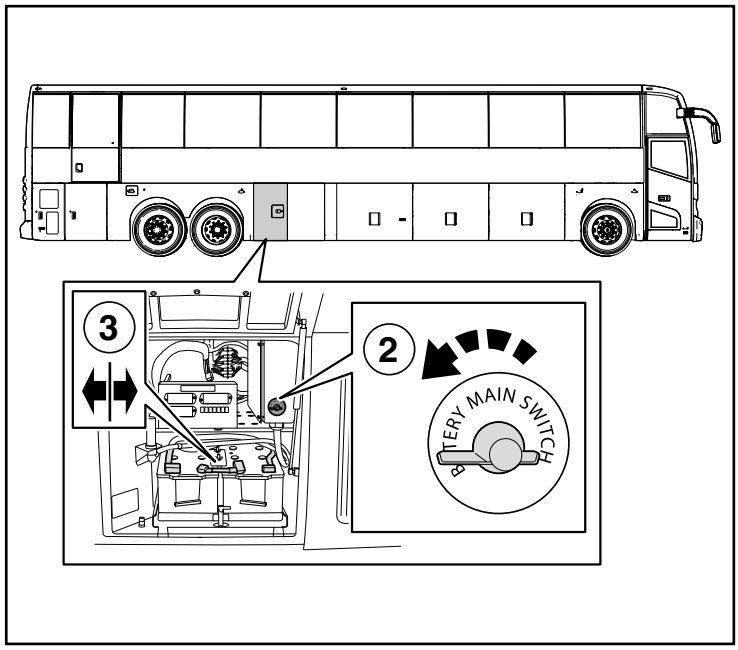

4. SERVICE PROCEDURE

4.1. REMOVING THE ENGINE

WARNING

- Before starting the service procedure, wear protective clothing.
- The engine must be cooled before its removal.

1. Apply chocks to the wheel.

WARNING

- Chock the wheels securely so the vehicle does not move.
- Do not remove the chocks until the entire operation is completed.

2. Turn off battery main switch.
3. Disconnect Battery.

WARNING

Hair, hands or clothing can be caught in the belt drive or coupling! Serious injuries are possible. Ensure that motor cannot be started while carrying out maintenance work!

4.1. REMOVING THE ENGINE

4. Open the engine maintenance lid.
5. Remove the rear bumper.

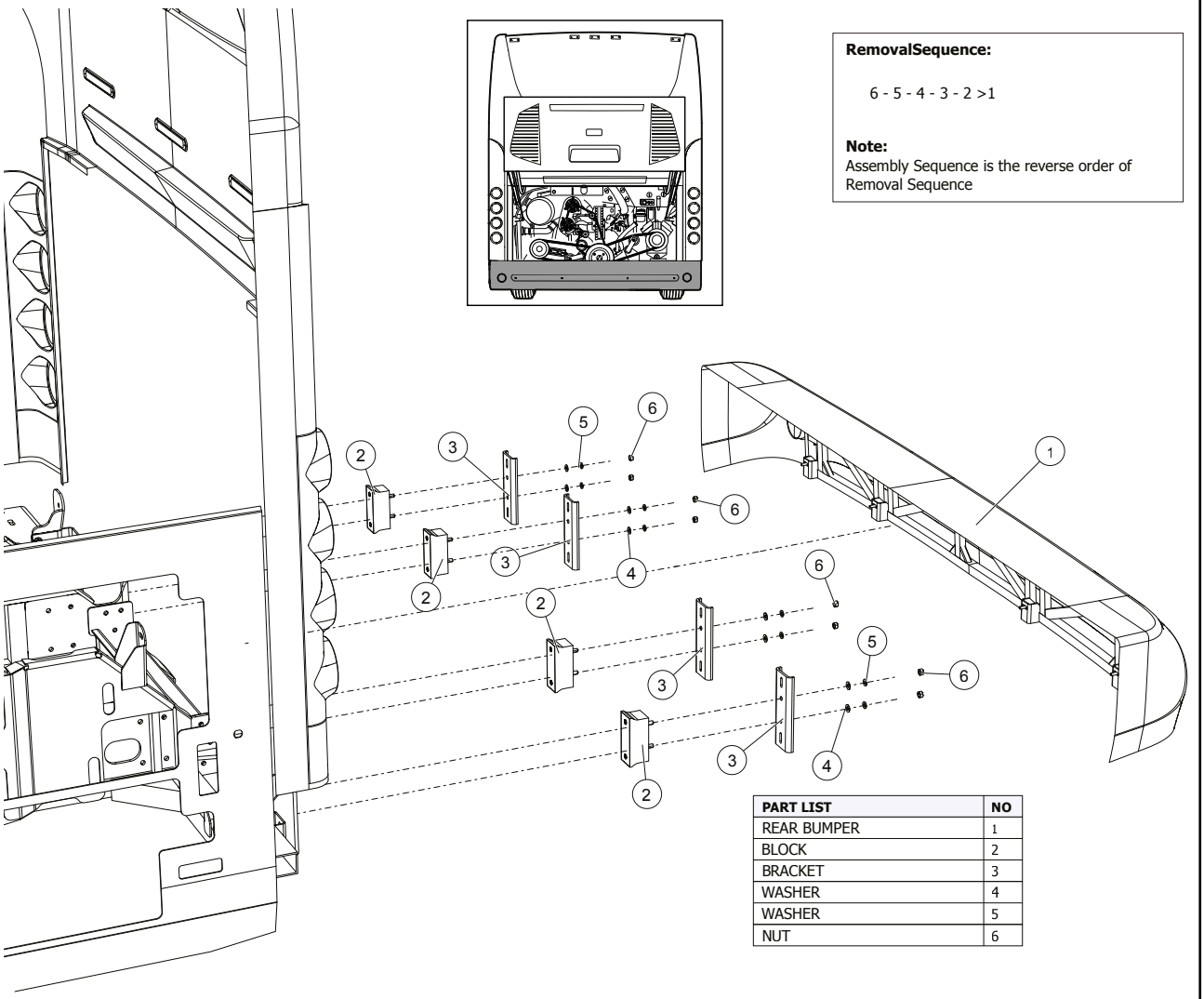

PART LIST	NO
REAR BUMPER	1
BLOCK	2
BRACKET	3
WASHER	4
WASHER	5
NUT	6

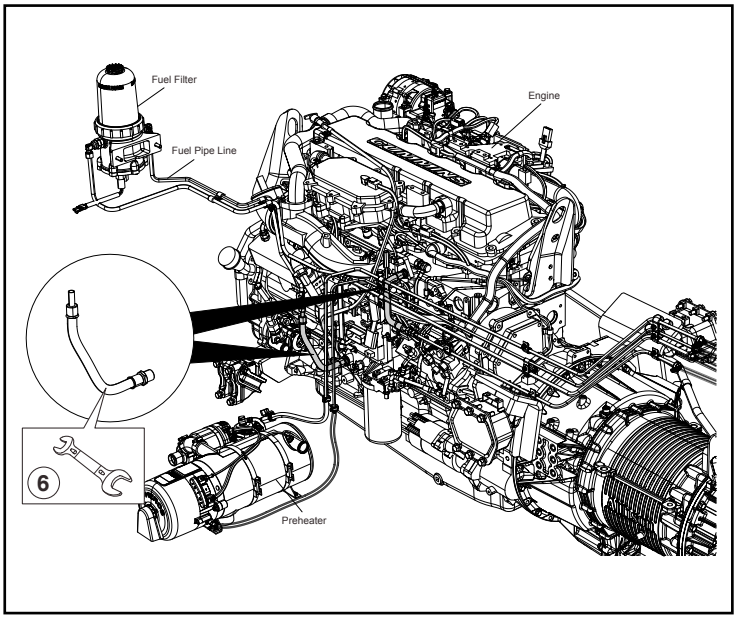

6. Disconnect the fuel hoses.

WARNING

After disconnection take care that no fuel leaks this could cause fire.

4.1. REMOVING THE ENGINE

7. Disconnect the speedometer cable, but before you need to remove the access hatch, the bolt and the bracket.

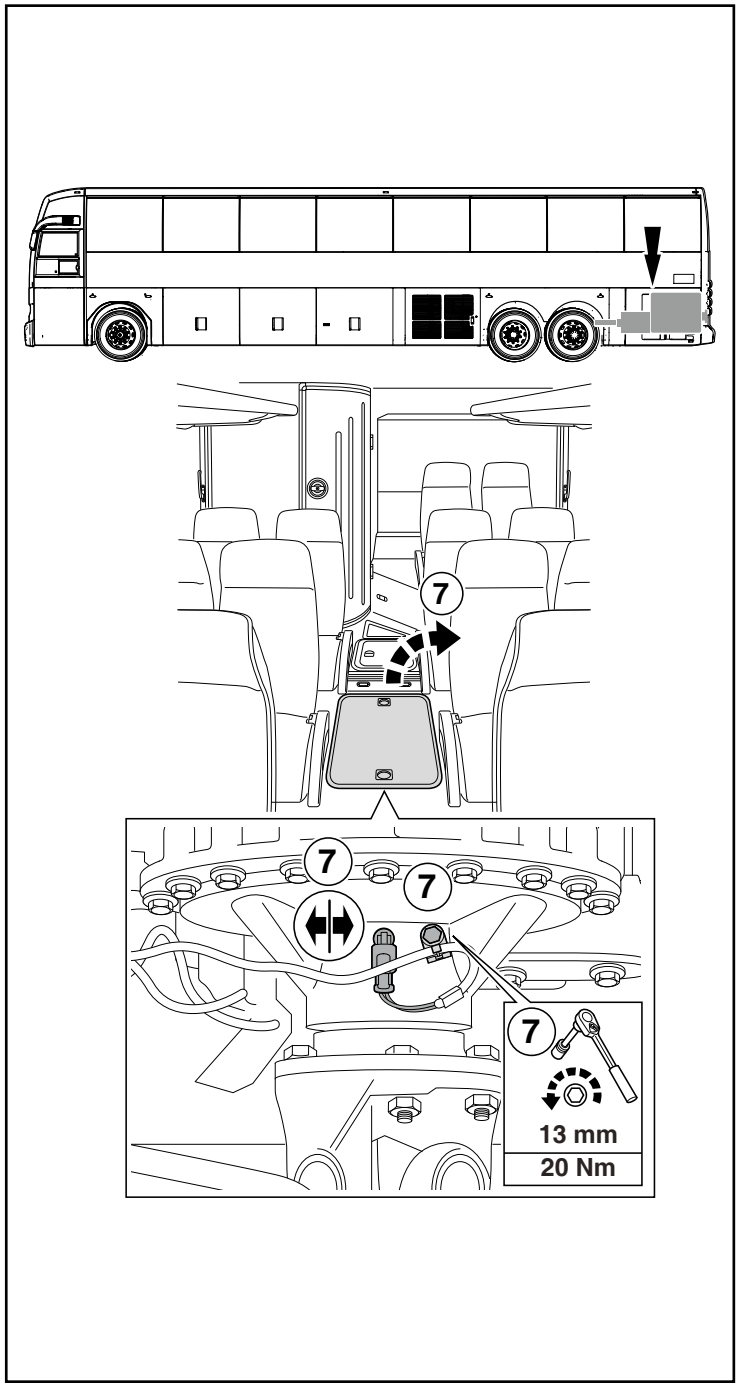

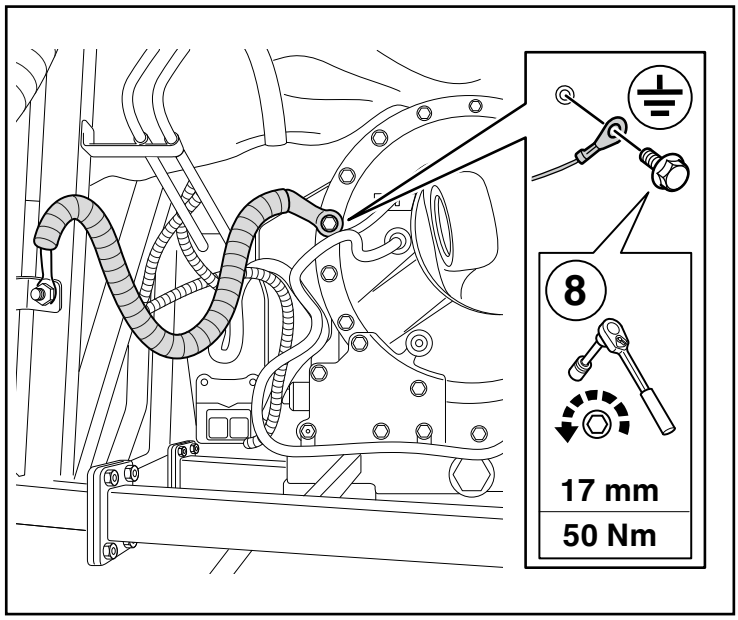

8. Remove the ground connection cable.

CAUTION

- Use care not to splash hydraulic fluid on painted surfaces because it could damage the paintwork.
- Wipe off hydraulic fluid immediately when you splash it on the paintwork.

4.1. REMOVING THE ENGINE

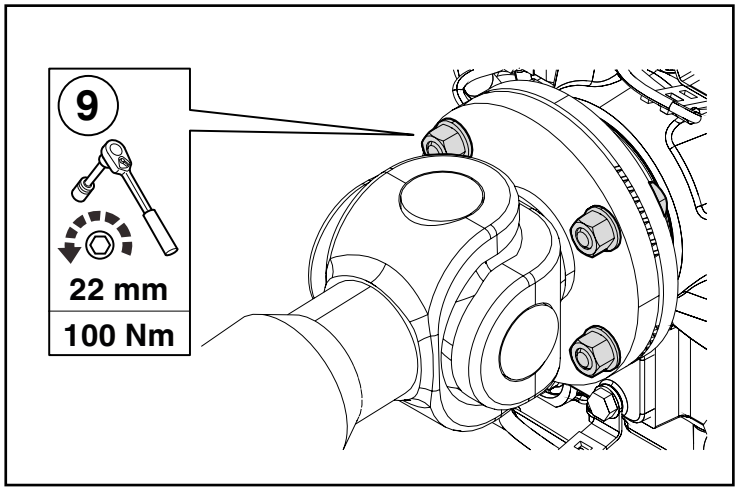

9. Remove the propeller shaft, transmission connection nuts, then remove the propeller shaft from the transmission.

> **WARNING**
> After removal of the propeller shaft, tie the shaft to the frame with a rope or etc.

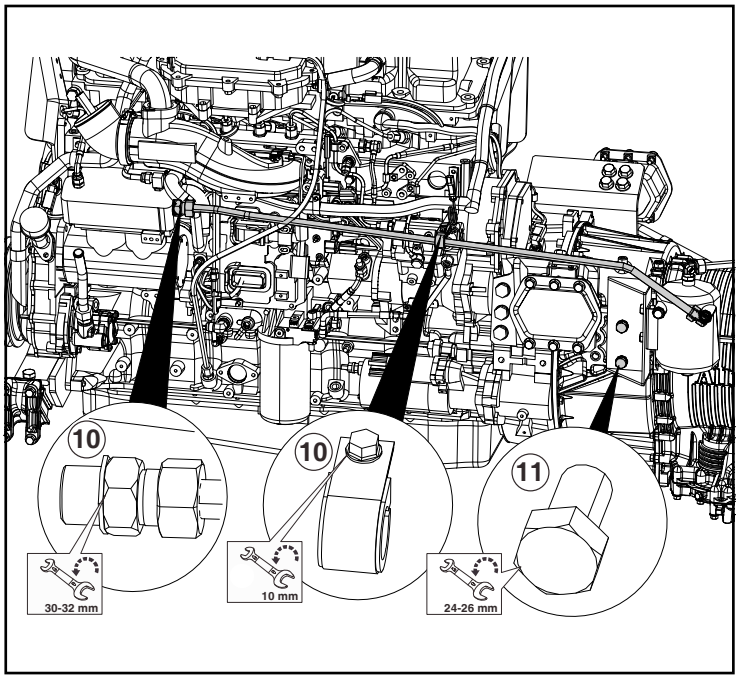

10. Remove the engine air connection pipe.

11. Unscrew surge tank bracket connection bolts.

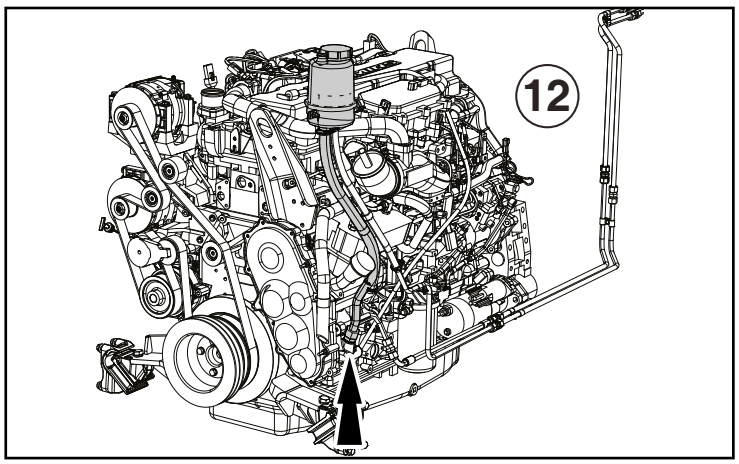

12. Disconnect the steering hydraulic oil pipe connection.

> **CAUTION**
> - Take care not to splash hydraulic fluid on painted surfaces because it could damage the paintwork.
> - Wipe off hydraulic fluid immediately when splashed on paintwork.

4.1. REMOVING THE ENGINE

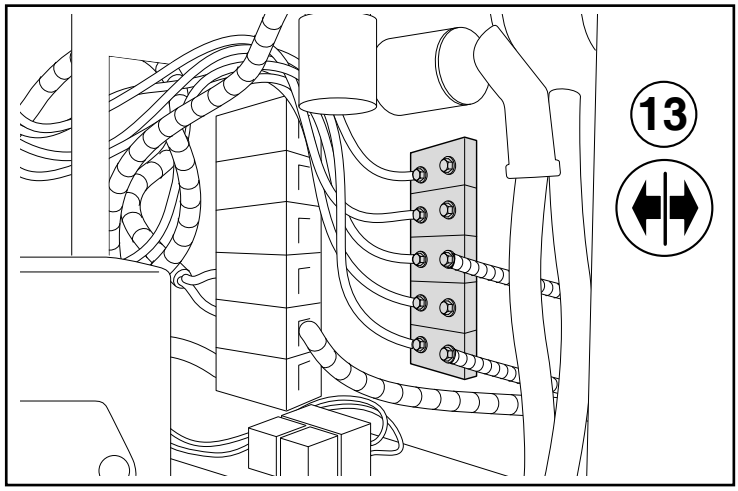

13. Disconnect all engine electrical cable connection sockets.

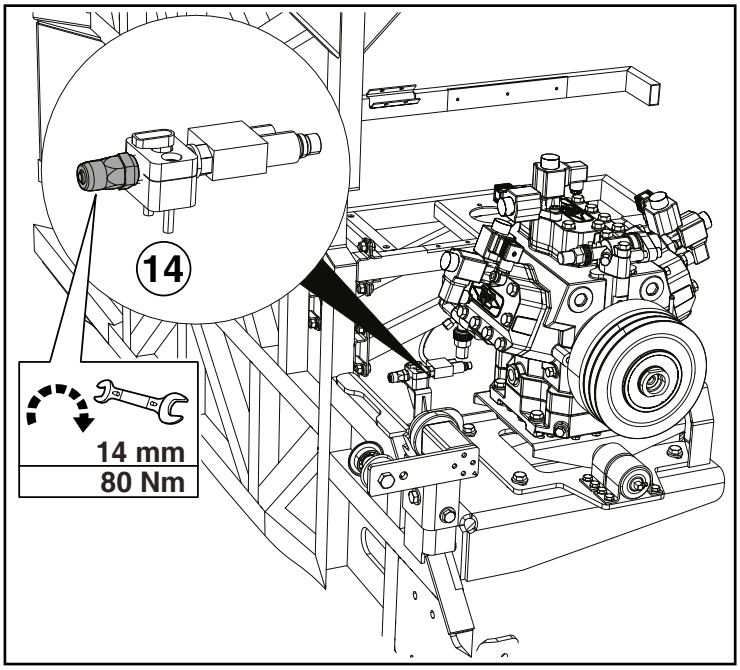

14. Remove the connector and discharge the air.

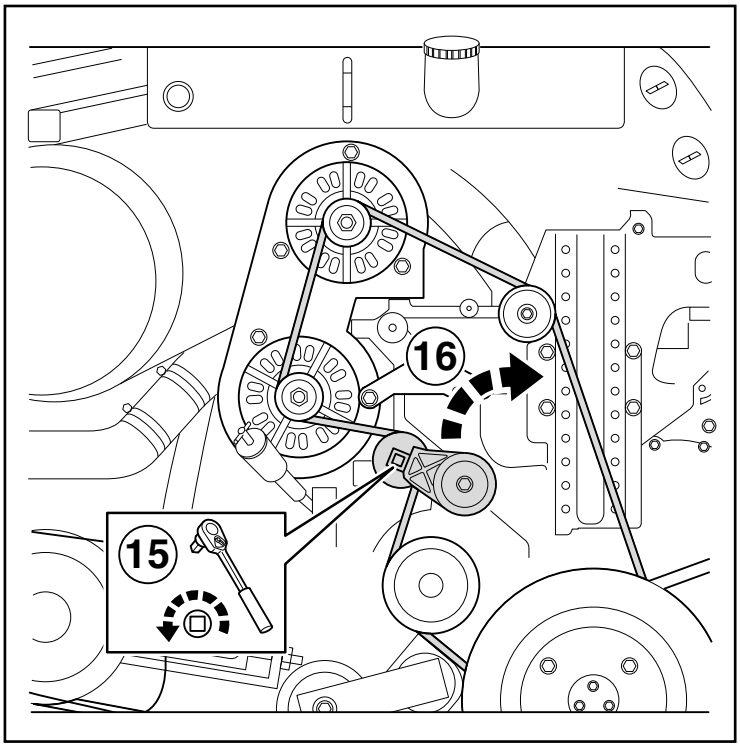

15. Release alternator belt.
16. Turn alternator belt tensioner clockwise to release.

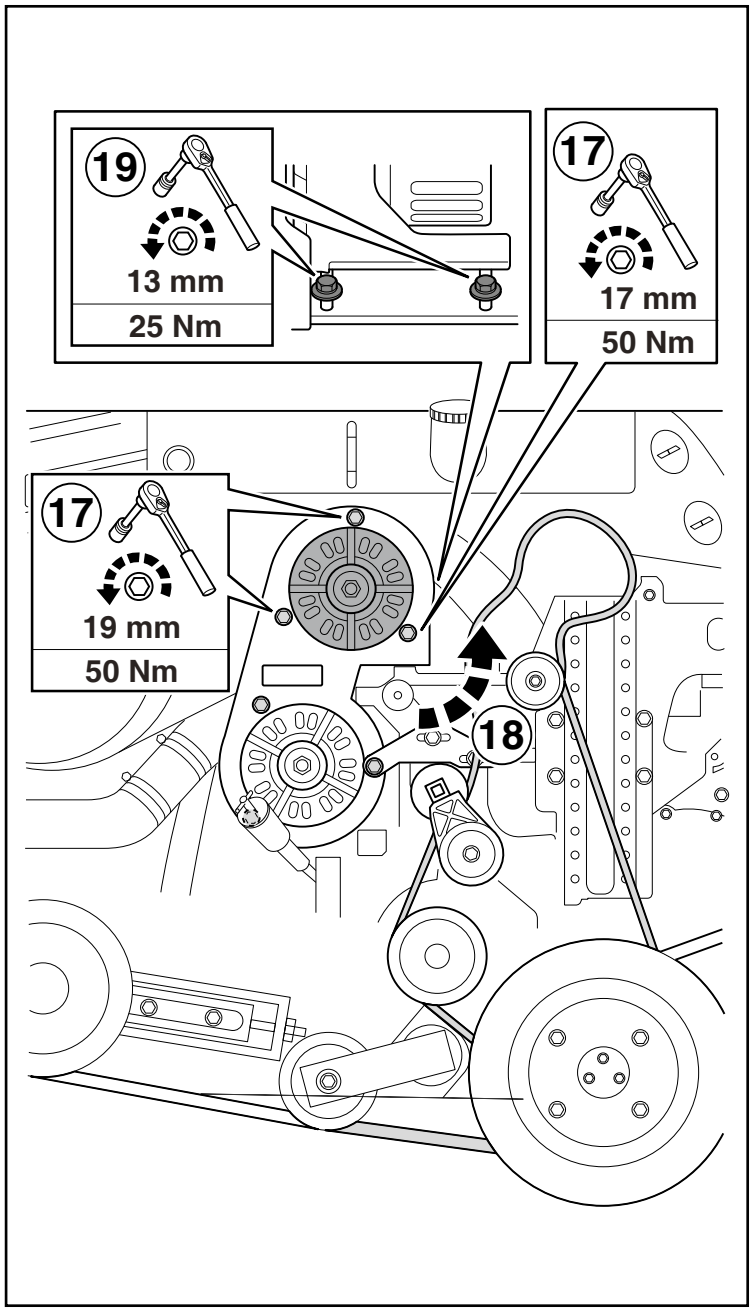

4.1. REMOVING THE ENGINE

17. Unscrew the 3 alternator fixation bolts 19 mm and 17 mm.
18. Turn alternator to the right to access right fixation bolts.
19. Unscrew 2 fixation bolts 13 mm.

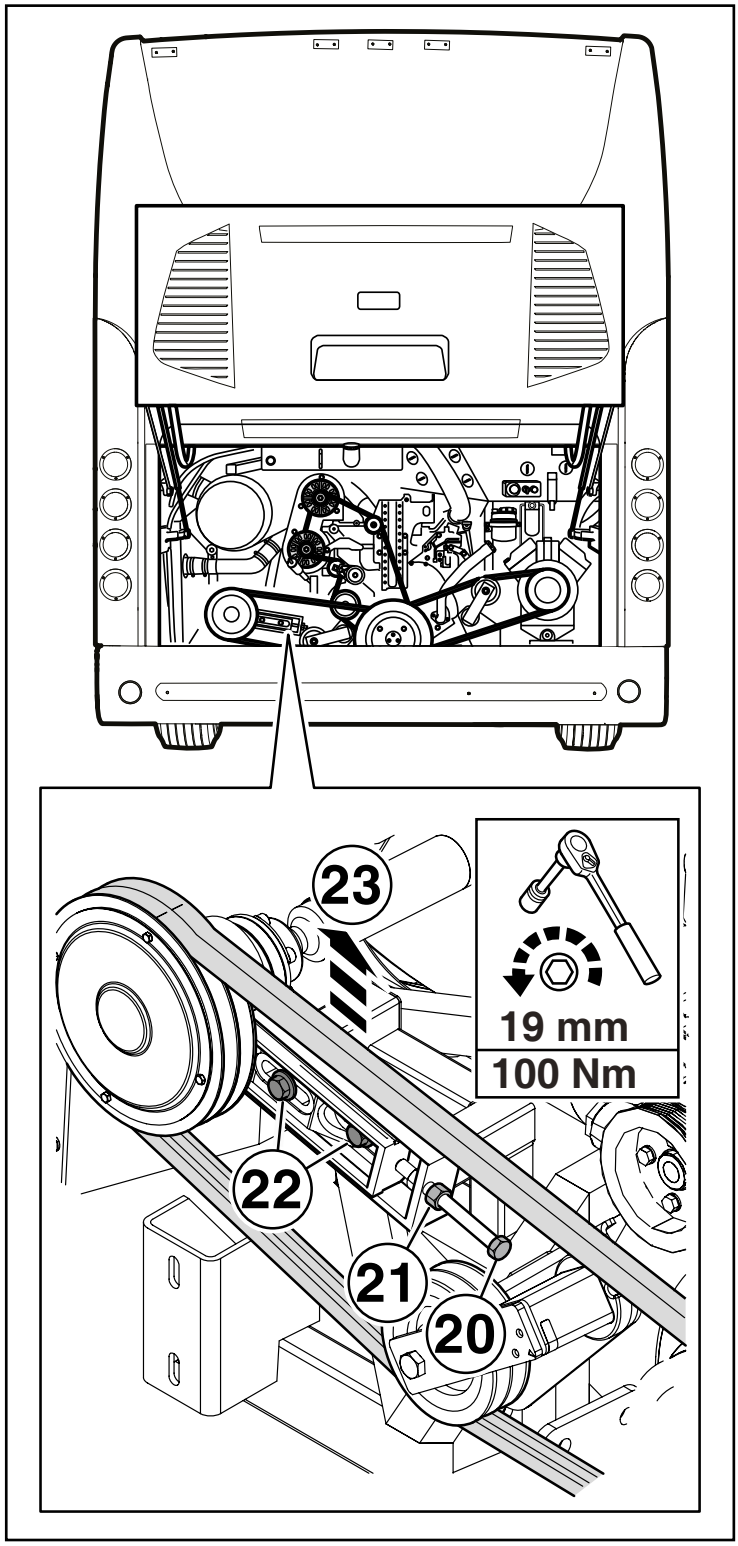

4.1. REMOVING THE ENGINE

20. Loosen the nut.
21. Loosen the tension bolt.
22. Loosen the bolts on the tensioning bracket.
23. Remove fan drive belt.

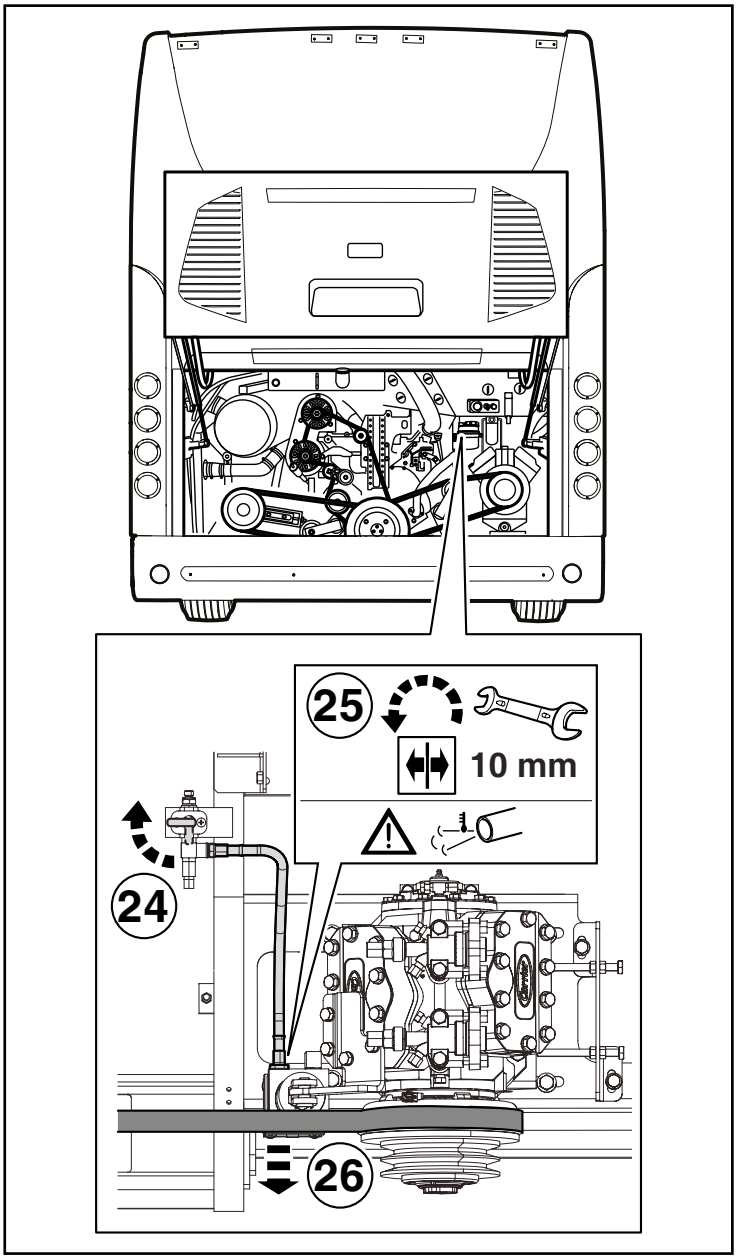

4.1. REMOVING THE ENGINE

24. Turn off the pressured air line for the compressor belt tension piston.
25. Loosen the air hose and release air.
26. When the adjustable bolts and pulley bolt are loosened A/C, compressor can be rotated anti-clockwise then the V-belt can be removed safely.

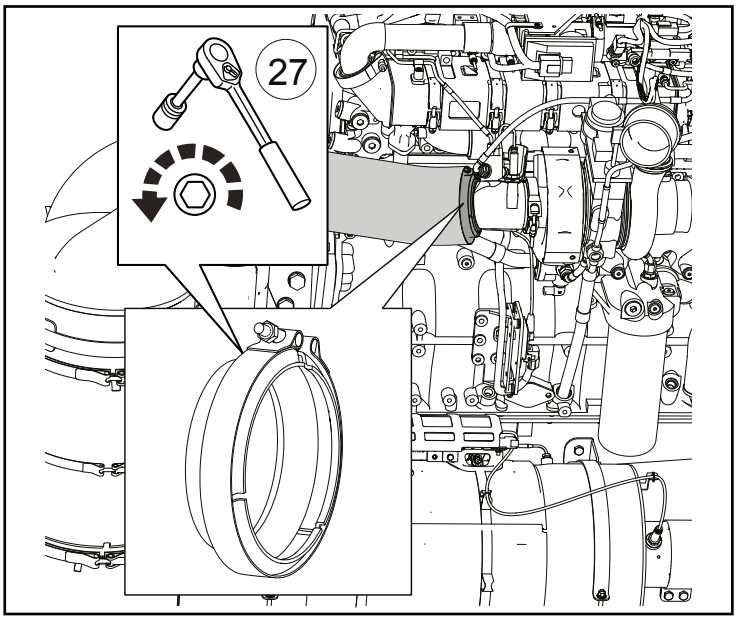

27. Loosen the screws of flexible exhaust pipe, engine connection clamps and remove the exhaust pipe from the engine.

4.1. REMOVING THE ENGINE

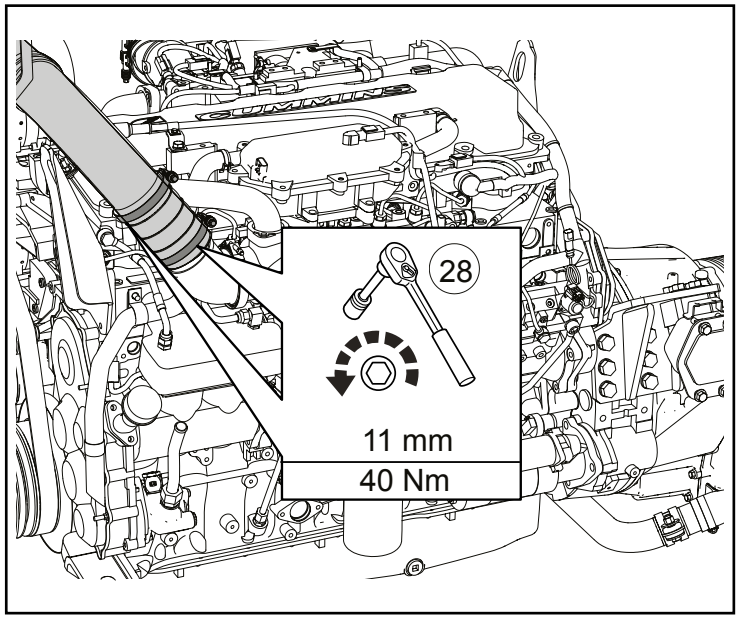

28. Loosen the engine connection clamps and remove the intercooler pipes from the engine.

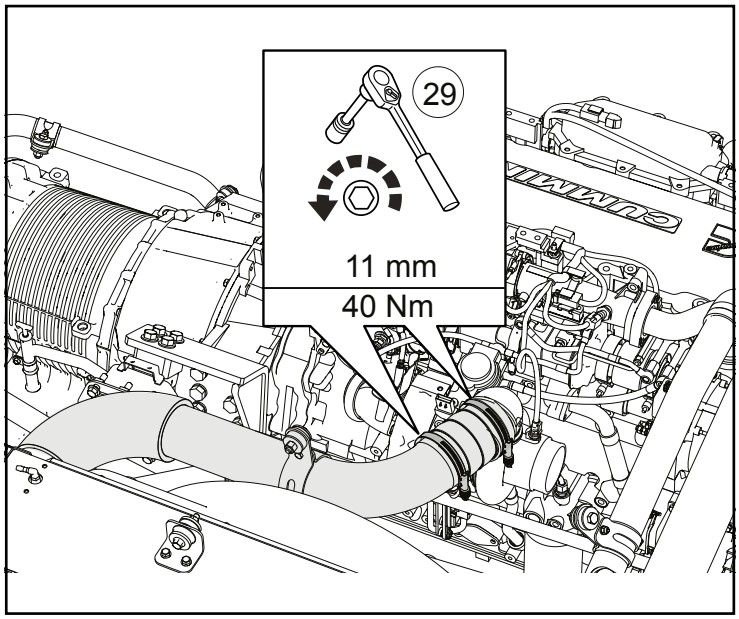

29. Loosen the intercooler pipes connection clamps and remove the intercooler pipes from the engine.

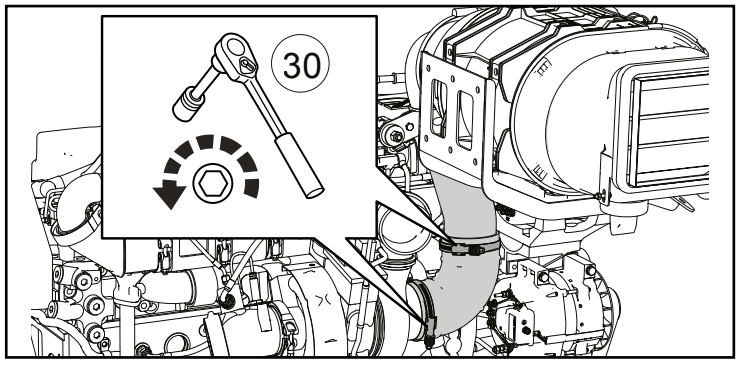

30. Remove the air intake system pipe clamps and remove the air intake pipes from the engine.

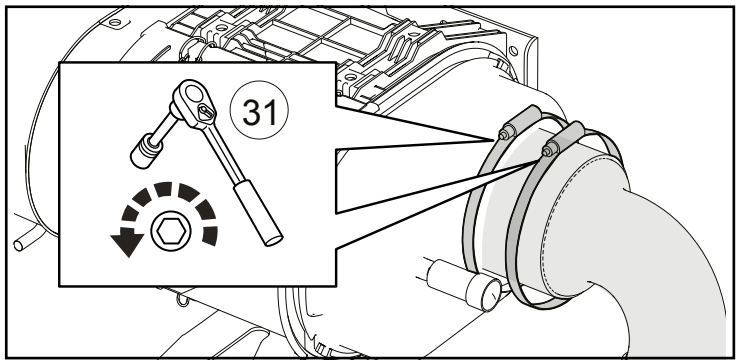

31. Remove the air intake system pipe clamps and remove the air intake pipes from the engine.

4.1. REMOVING THE ENGINE

32. Loosen the cold water radiator pipe clamp.
33. Disconnect the cold water radiator hose from the radiator
34. Drain coolant from the bung below the radiator.

WARNING

- To avoid injury, make sure the coolant has cooled sufficiently before draining it out.
- Unless care is taken, opening the pressure cap when the coolant is hot can cause the coolant to spray out. Cover the pressure cap with a cloth, and loosen the cap slowly to bleed off the pressure before opening it fully.

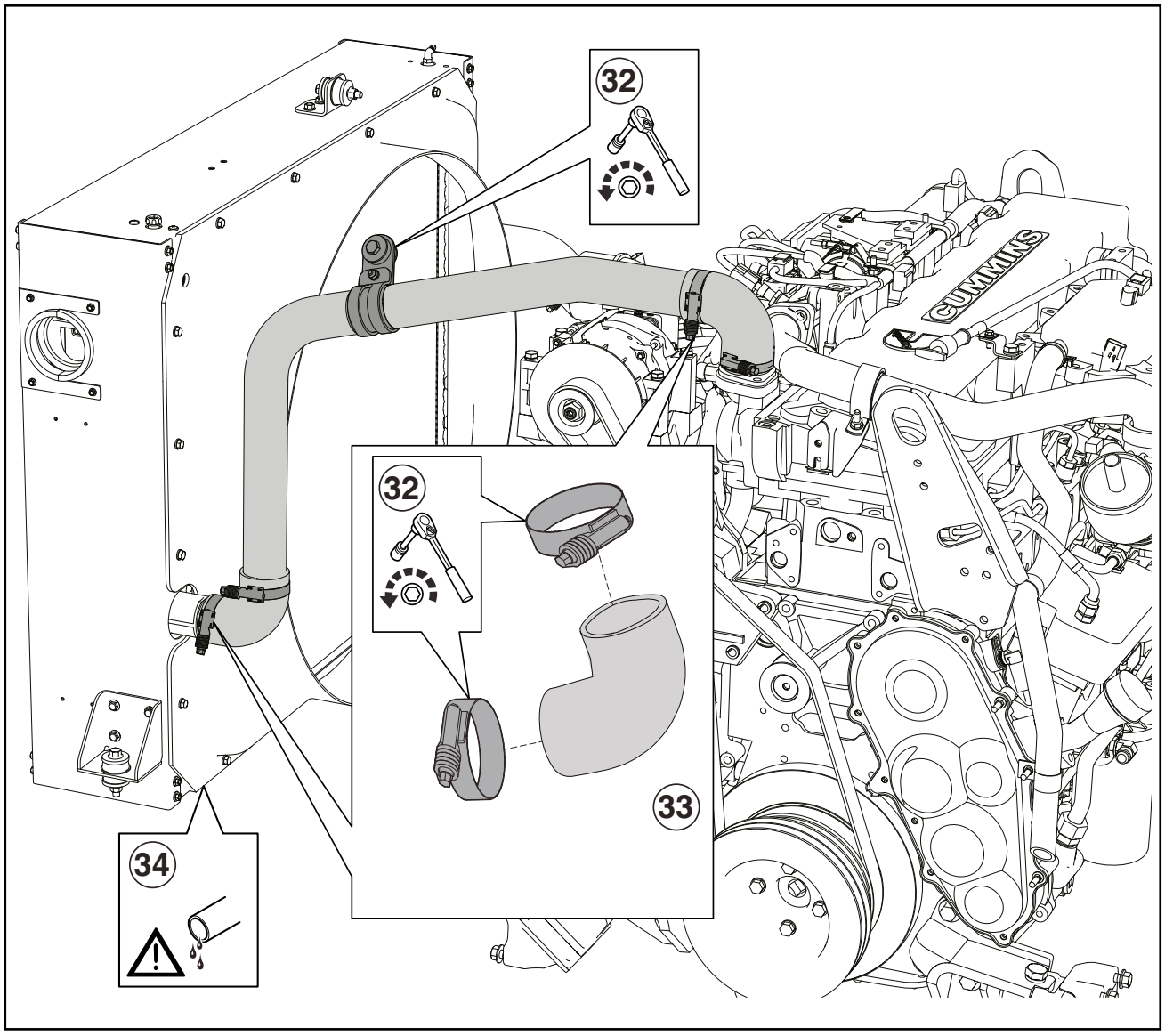

4.1. REMOVING THE ENGINE

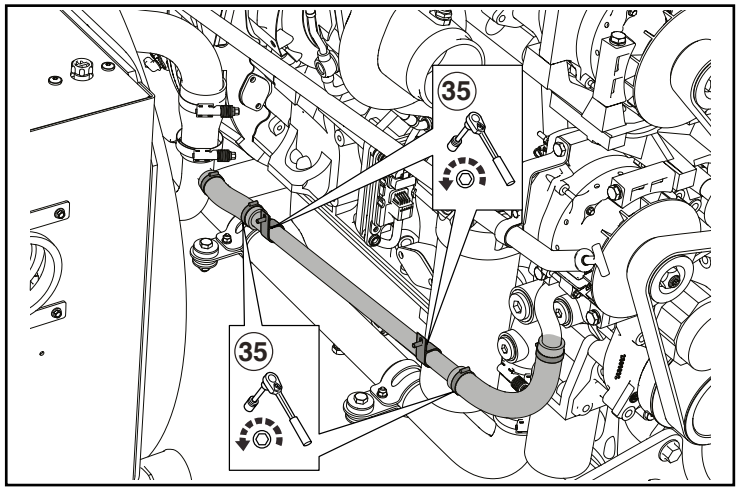

35. Loosen the hot water radiator pipe clamp and disconnect the hot water radiator hose from the radiator.

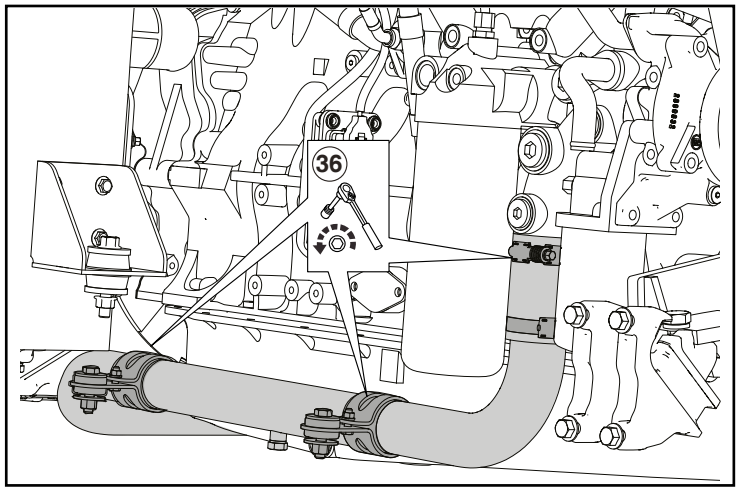

36. Loosen the cooling system pipe, engine connection clamps and remove the cooling system pipes from the engine.

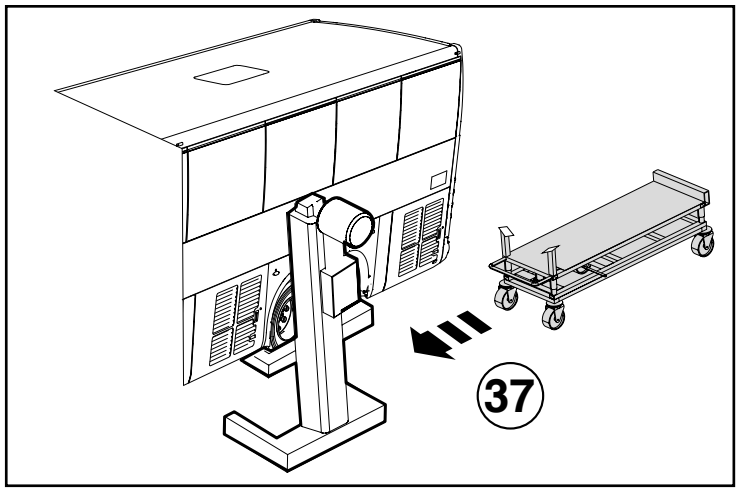

37. Put the engine, transmission jack under the vehicle.

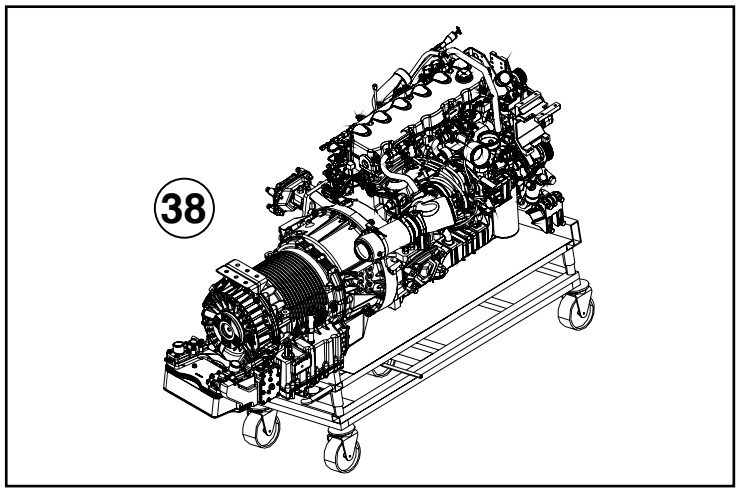

38. Support the engine with a suitable engine, transmission jack.

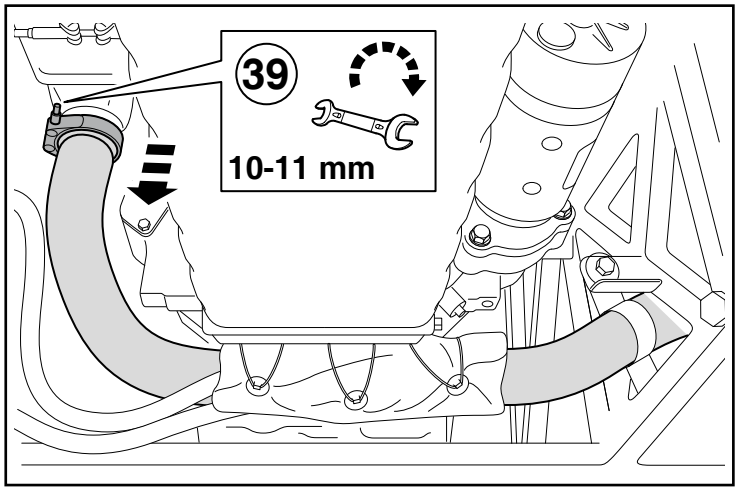

4.1. REMOVING THE ENGINE

39. Remove ARD gas pipe.

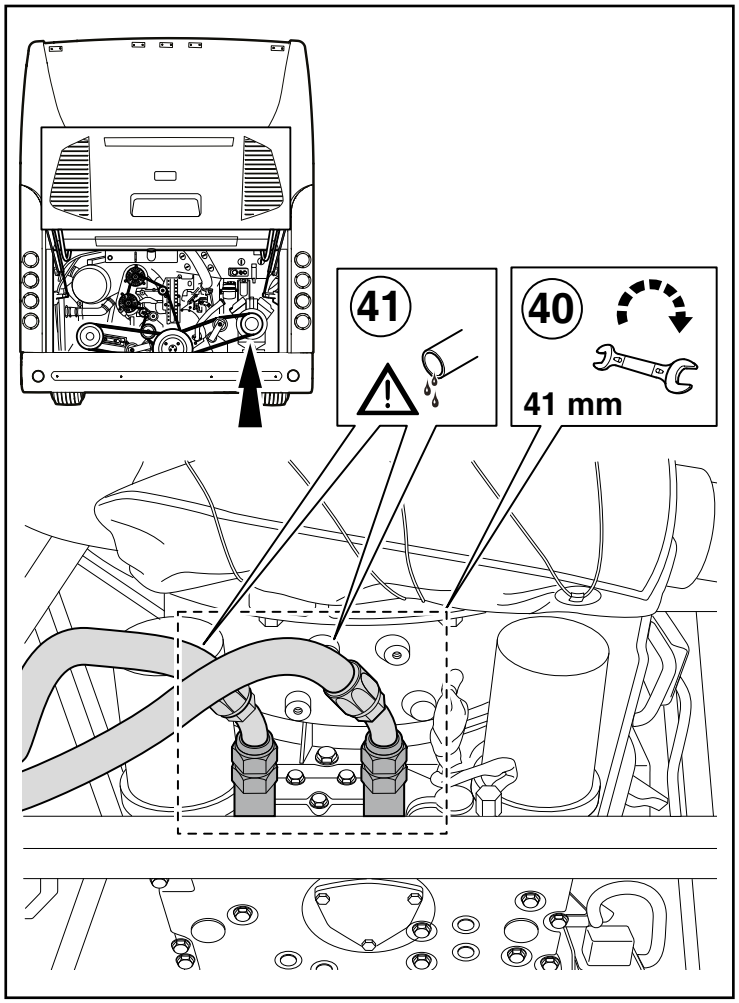

40. Remove transmission oil hoses (tool size: 41 mm).
41. Drain oil.

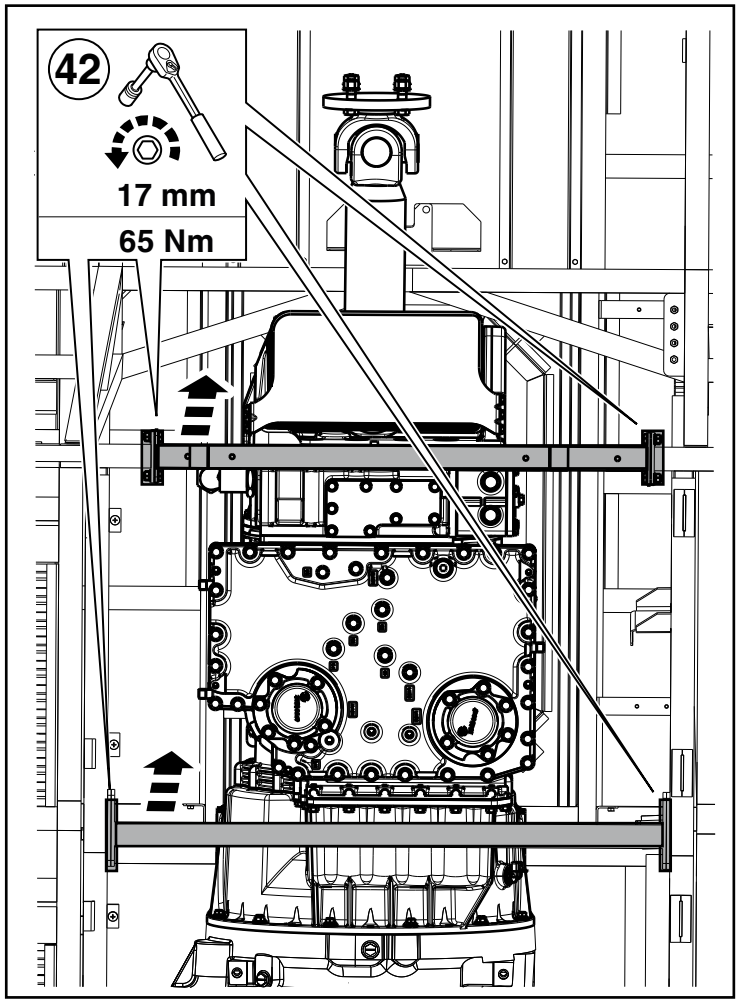

4.1. REMOVING THE ENGINE

42. Remove both engine carrier traverses, (tool size: 17 mm).

CAUTION

When moving the engine be careful not to allow it to hit the rear body of the vehicle.

CAUTION

Before dismantling the engine, check that the pipings and wirings have been disconnected excatly.

4.1. REMOVING THE ENGINE

43. Remove the engine mounting support bolts (tool size: 36 mm).
44. Remove the engine mounting support bolts (tool size: 22 mm).
45. Remove engine pads by loosen bolts (tool size: 24 mm).
46. Move the engine to the rear of the vehicle and casette.
47. For assembly of the engine and casette, follow reverse sequence of disassembly.

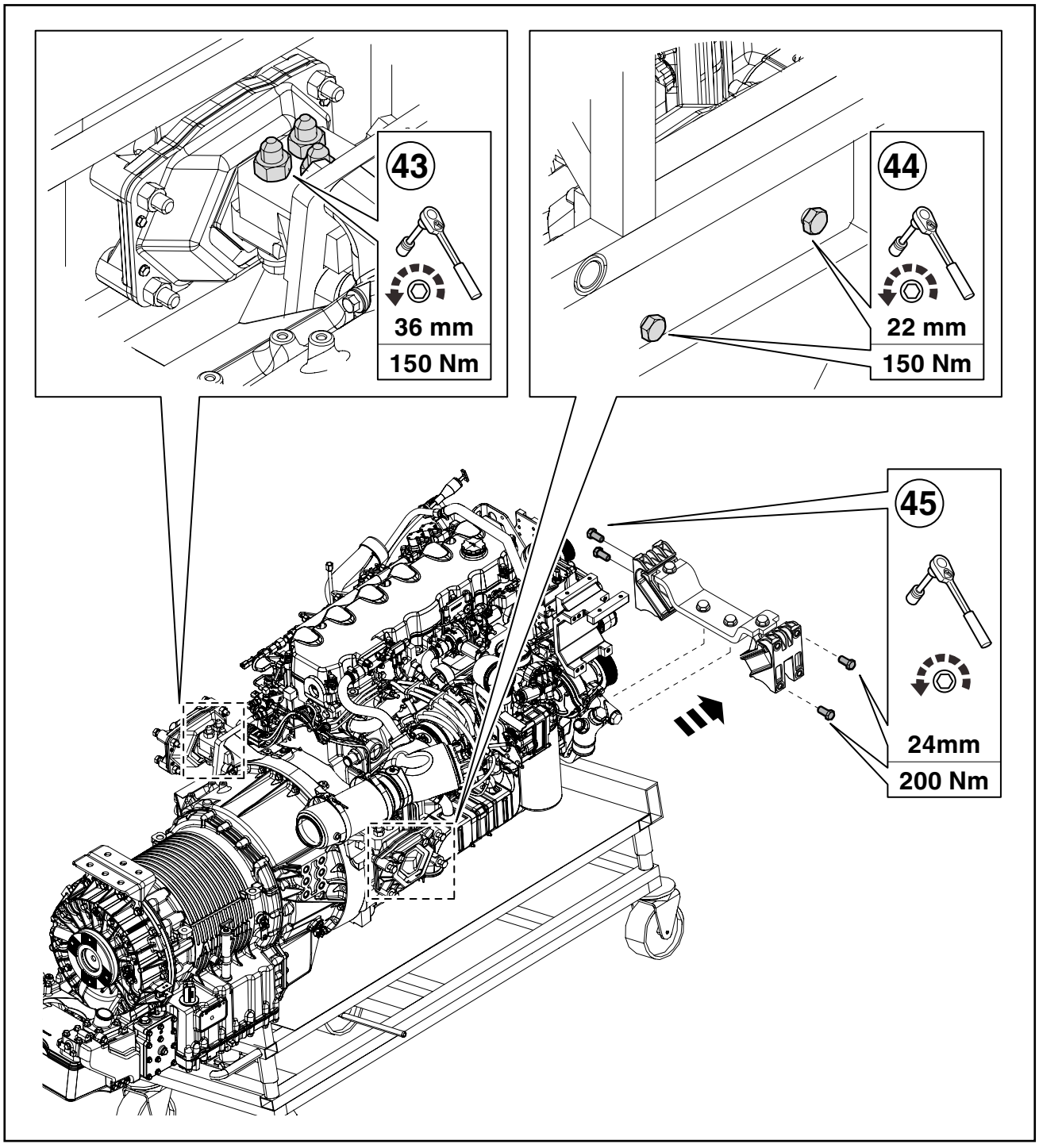

4.2 EXPLODED VIEW OF THE ENGINE ASSY – CUMMINS

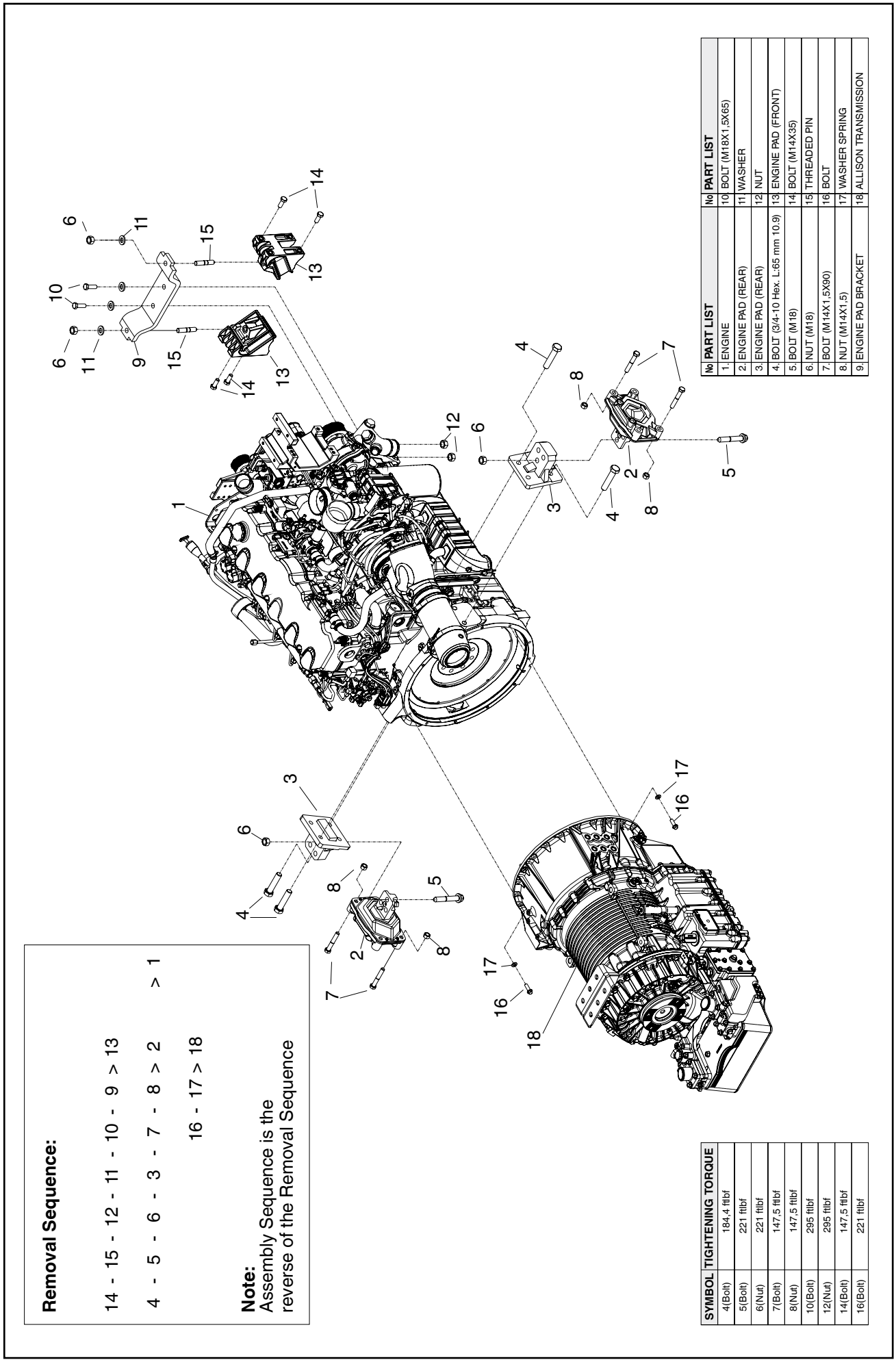

No	PART LIST	No	PART LIST
1.	ENGINE	10.	BOLT (M18X1.5X65)
2.	ENGINE PAD (REAR)	11.	WASHER
3.	ENGINE PAD (REAR)	12.	NUT
4.	BOLT (3/4-10 Hex. L.65 mm 10.9)	13.	ENGINE PAD (FRONT)
5.	BOLT (M18)	14.	BOLT (M14X35)
6.	NUT (M18)	15.	THREADED PIN
7.	BOLT (M14X1,5X90)	16.	BOLT
8.	NUT (M14X1.5)	17.	WASHER SPRING
9.	ENGINE PAD BRACKET	18.	ALLISON TRANSMISSION

SYMBOL	TIGHTENING TORQUE
4(Bolt)	184,4 ftlbf
5(Bolt)	221 ftlbf
6(Nut)	221 ftlbf
7(Bolt)	147,5 ftlbf
8(Nut)	147,5 ftlbf
10(Bolt)	295 ftlbf
12(Nut)	295 ftlbf
14(Bolt)	147,5 ftlbf
16(Bolt)	221 ftlbf

4.3. INSTALLATION OF THE ENGINE

For assembly of the engine, follow reverse sequence of removal operations.

Operations after Installation
Check the oil level to see that the oil is filled to the FULL level. If the oil level is lower than FULL level, refill the oil.

Note:
Before checking the oil level wait a few minutes until engine oil completely reaches the oil pan.

Oil Specifications:
- CJ4
- CAT Deo ULS 15W-40

1. Fill the coolant to specified level.
2. After filling, check if the coolant is filled up to the FULL level in the reservoir tank.
3. If the level is lower than FULL, refill the coolant.



CAUTION

Coolant is a toxic fluid. Protect skin and eyes. Coolant is harmful to the environment. After use, it should be processed as industrial chemical waste.

4.4. REMOVING THE ALTERNATOR – CUMMINS ENGINE

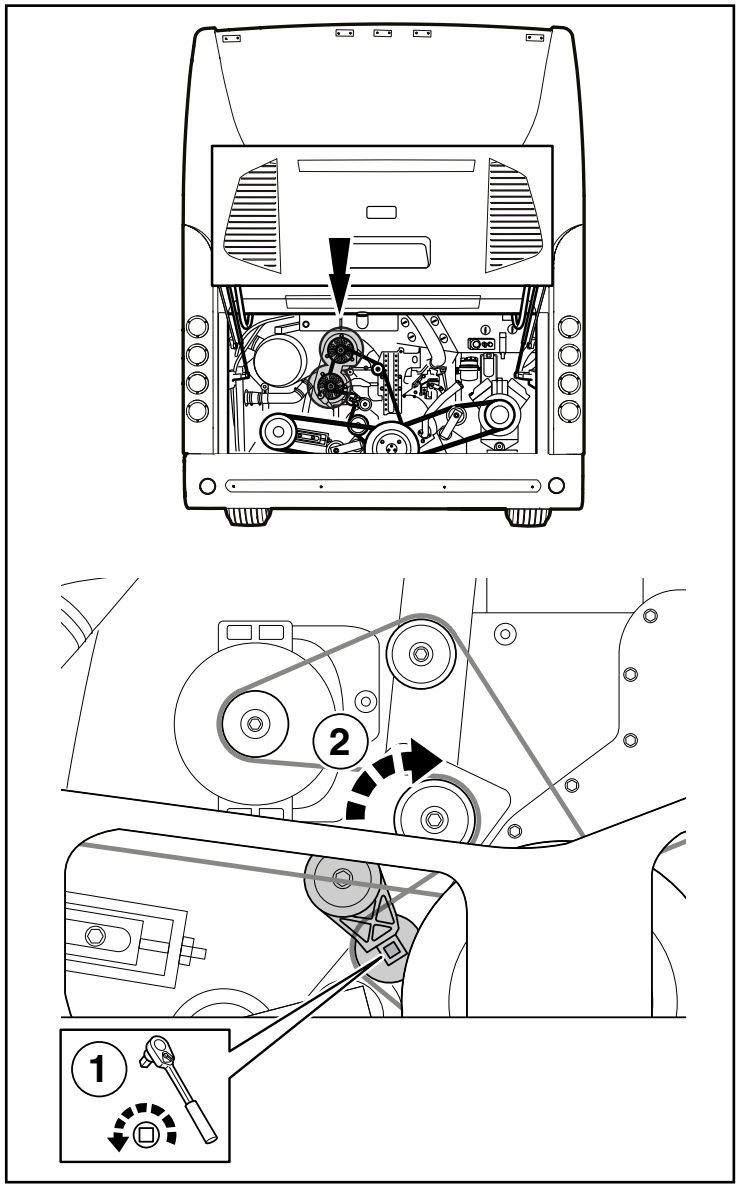

1. Release alternator belt.
2. Turn alternator belt tensioner clockwise to release.

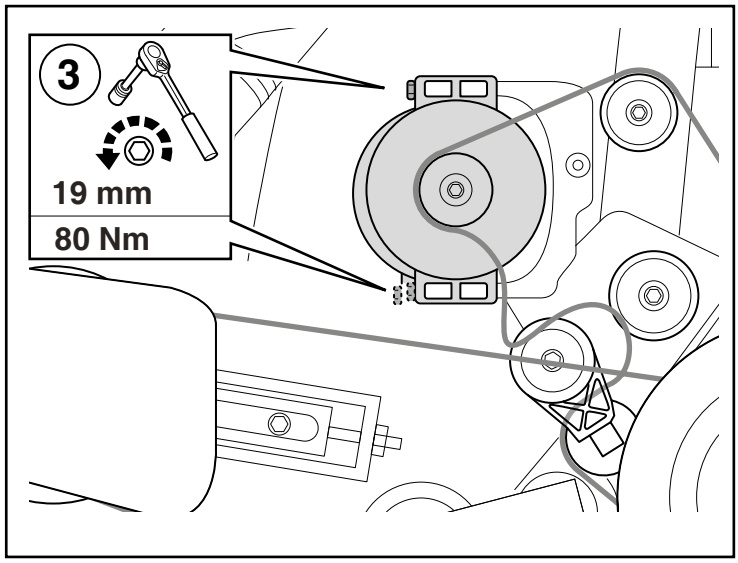

3. Unscrew the 3 alternator fixation bolts.

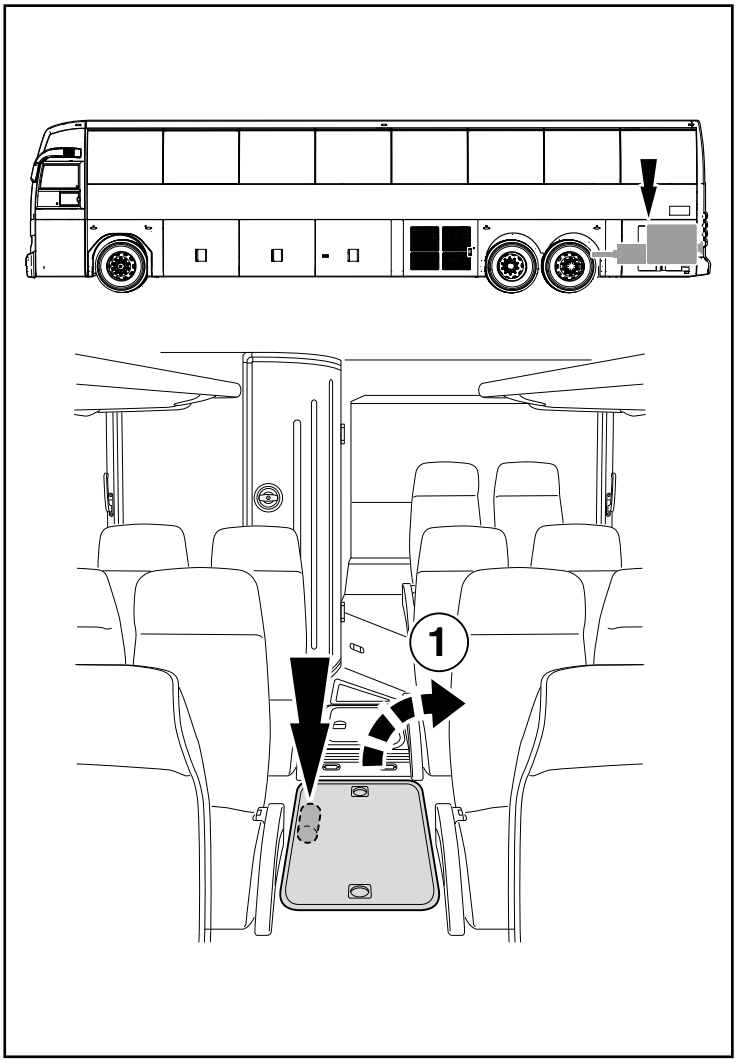

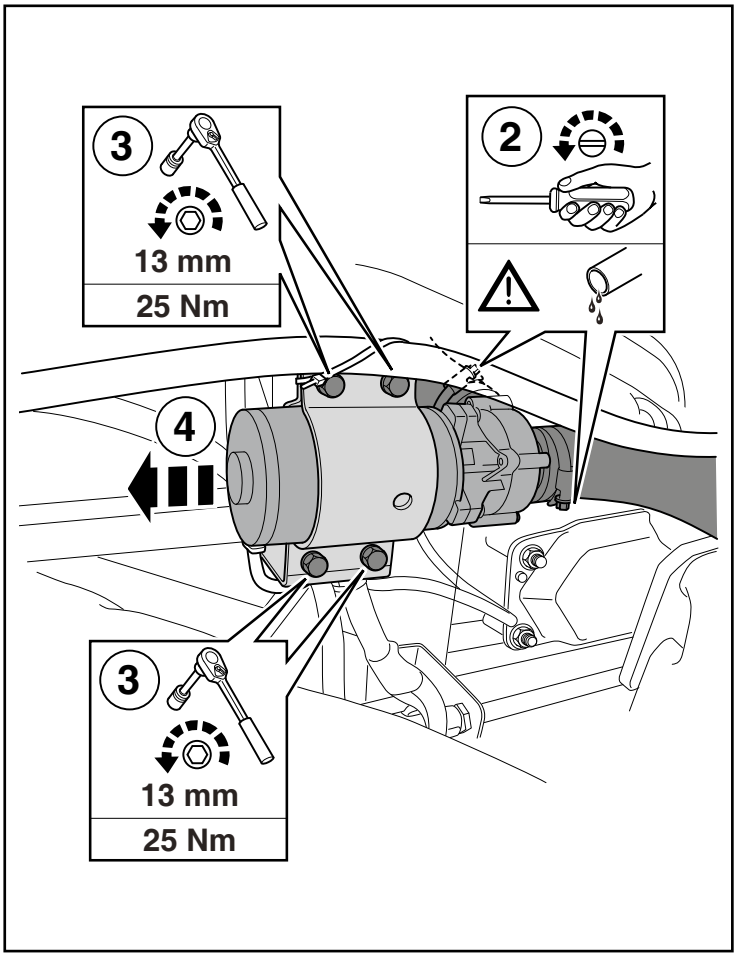

4.5. REMOVING THE WATER PUMP

Note:
Before removing water pump the water valves should be closed and electrical connections disconnected.

1. Remove the access hatch located inside the vehicle at the rear.
2. Unscrew 2 clamps to disconnect the pipes. Warning risk of fluid loss.
3. Unscrew 4 bolts 13 mm and remove bracket.
4. Remove water pump.

02 COOLING SYSTEM

Rev.00 / 25.03.14

1. TOOLS **2**

2. SPECIFICATION **3**

2.1. Cummins Engine 3

3. SERVICE PROCEDURE **4**

3.1. Removal Of The Radiator 4

3.2. Removal Of The Reservoir Tank 8

3.3. Exploded View Of The Cooling System 10

4. CLEANING PROCEDURE **12**

4.1. Air Bleeding Of Cooling System 13

4.2. Gas Leak Testing 13

5. TROUBLESHOOTING **14**

GENERAL

- If work is performed by people who do not have the necessary training to carry out the work or if this information is handled carelessly or totally ignored, this may result in severe injury and/or death. Inaddition, serious damage to the vehicle may occur.
- Always read the safety instructions in full before starting certain operations. The safety instructions stipulate which aspects must be considered to achieve maximum safety. The information is given that is very important for health and safety.
- Always work in adequately ventilated rooms with sufficient lighting, free from dirt and clutter. Never leave tools or parts lying around, keep away from (high-) voltage sources that present a risk of short-circuiting. Always wear protective clothing. Do not wear any damaged or loose-fitting clothing and remove jewelry before starting the work. In case of long hair use hairnet.

1. TOOLS

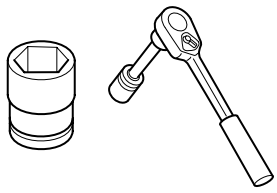 Impact Socket	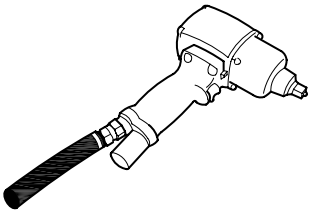 Impact Wrenches	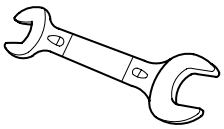 Open Wrench Double Ended
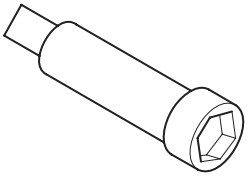 Short Arm		

2. SPECIFICATION

2.1. CUMMINS ENGINE

C9 DITA 350 hp		
Minimum operating block coolant temperature	160ºF	71ºC
Coolant Capacity	13.1 quarts	12.4 L
Engine coolant circuit thermostat opening temperature	180ºF	82ºC
Minimum fill rate (low level alarm required for most engines)	200ºF	93ºC
Minimum coolant expansion space (% total system capacity)	3 gpm	11 L/min
Minimum drawdown (% total system capacity): 5% minimum + 1% greater than amount not filled at initial fill	6%	
Maximum deseration time	25 min	
Minimum pressure cap rating at sea level	15 psi	103 kPa
Full-ON Fan engine coolant outlet temperature	210ºF	99ºC
Full-ON Fan charge air cooler outlet temperature	150ºF	66ºC
Winter fronts - must not restrict air passage area below:	120 in^2	774 cm^2

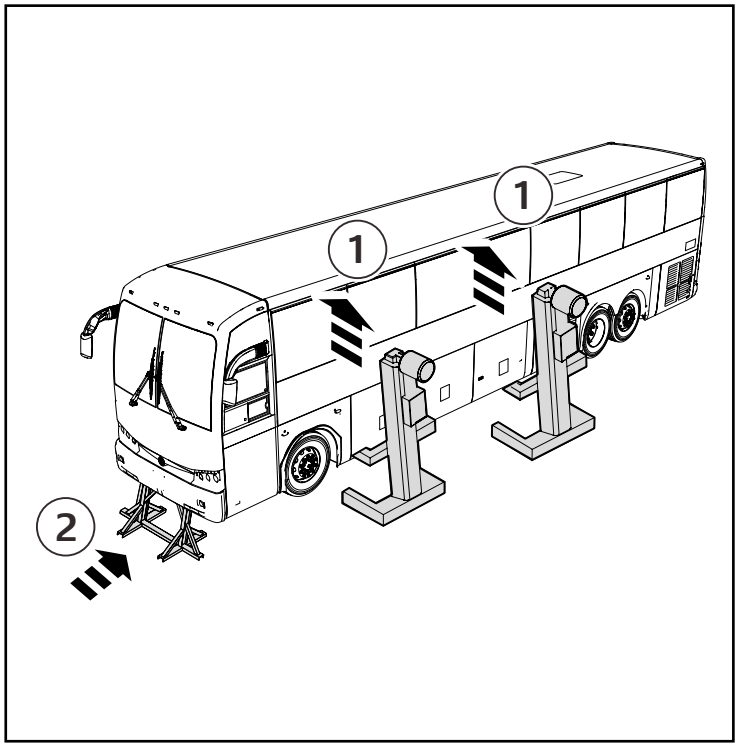

3. SERVICE PROCEDURE
3.1. REMOVAL OF THE RADIATOR

1. Lift up the vehicle with the lifting jack.
2. Support the frame by rigid rack after lifting bus.
3. Loosen the hot water radiator pipe clamp.
4. Disconnect the hot water radiator pipe from the radiator and drain coolant.
5. Disconnect the radiator air outlet pipe connection clamps.
6. Remove air pipe from the radiator.
7. Isolation plates should be removed.
8. Radiator chocks should be removed (4 chocks).

CAUTION

Before draining the coolant, loosen the reservoir tank pressure cap to reduce the pressure in the cooling system.

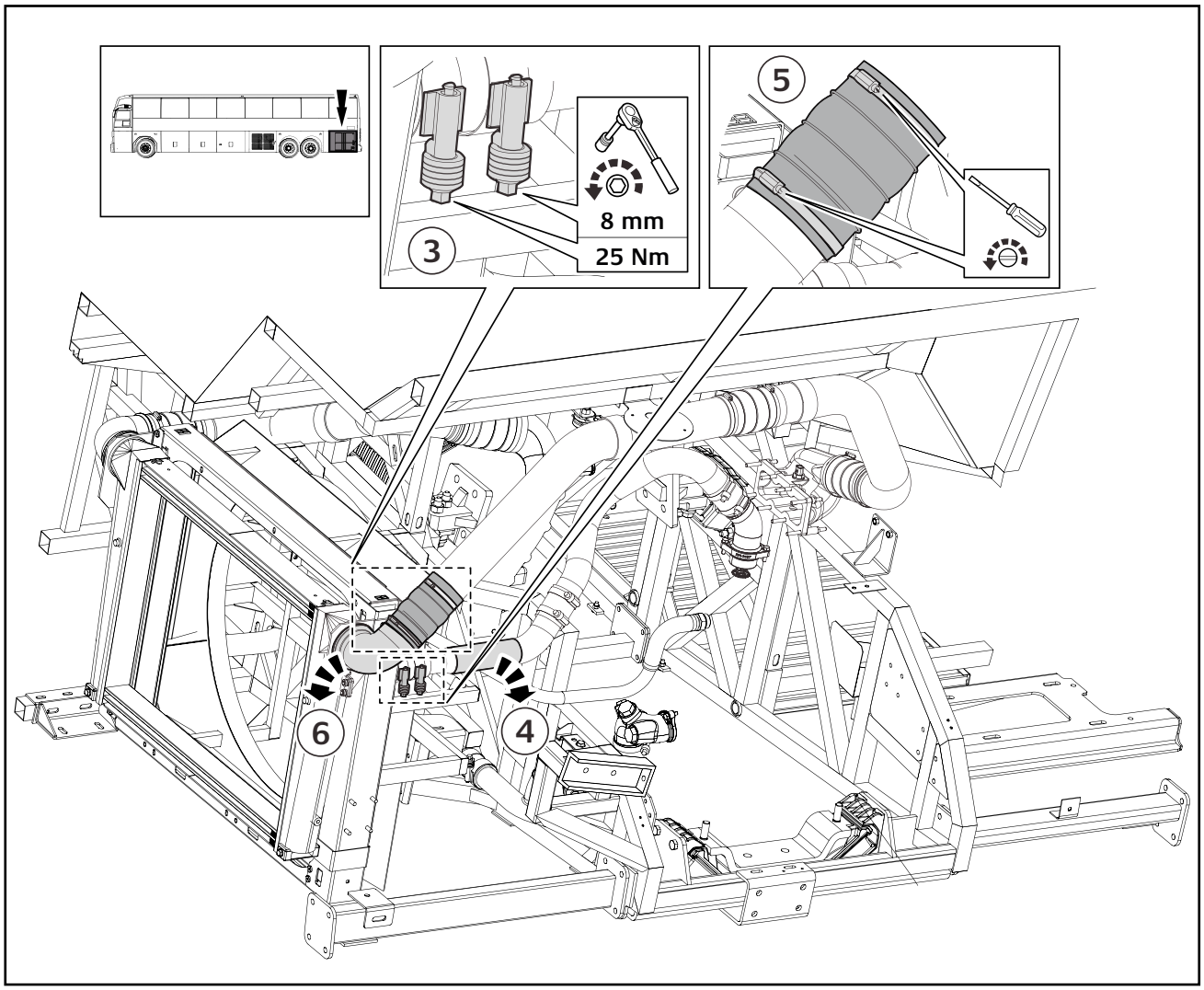

3.1. REMOVAL OF THE RADIATOR

9. Remove the fan drive radiator connection upper bracket bolts, tool size 22mm.
10. Remove the fan drive radiator connection lower bracket bolts, tool size 22mm..

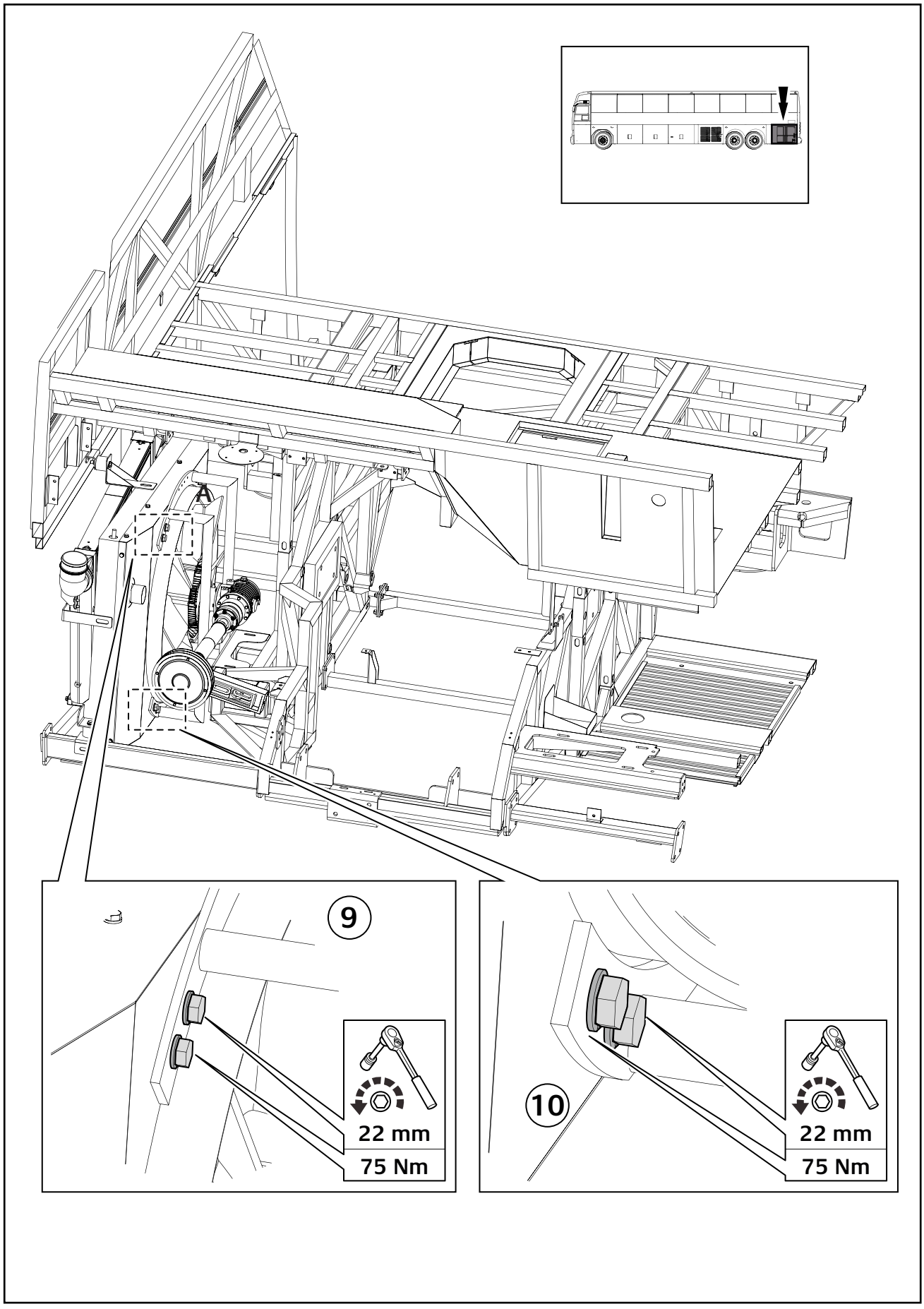

3.1. REMOVAL OF THE RADIATOR

11. Loosen the cold water radiator pipe clamp.
12. Disconnect the radiator air inlet pipe connection clamps.
13. Remove air pipe from the radiator.

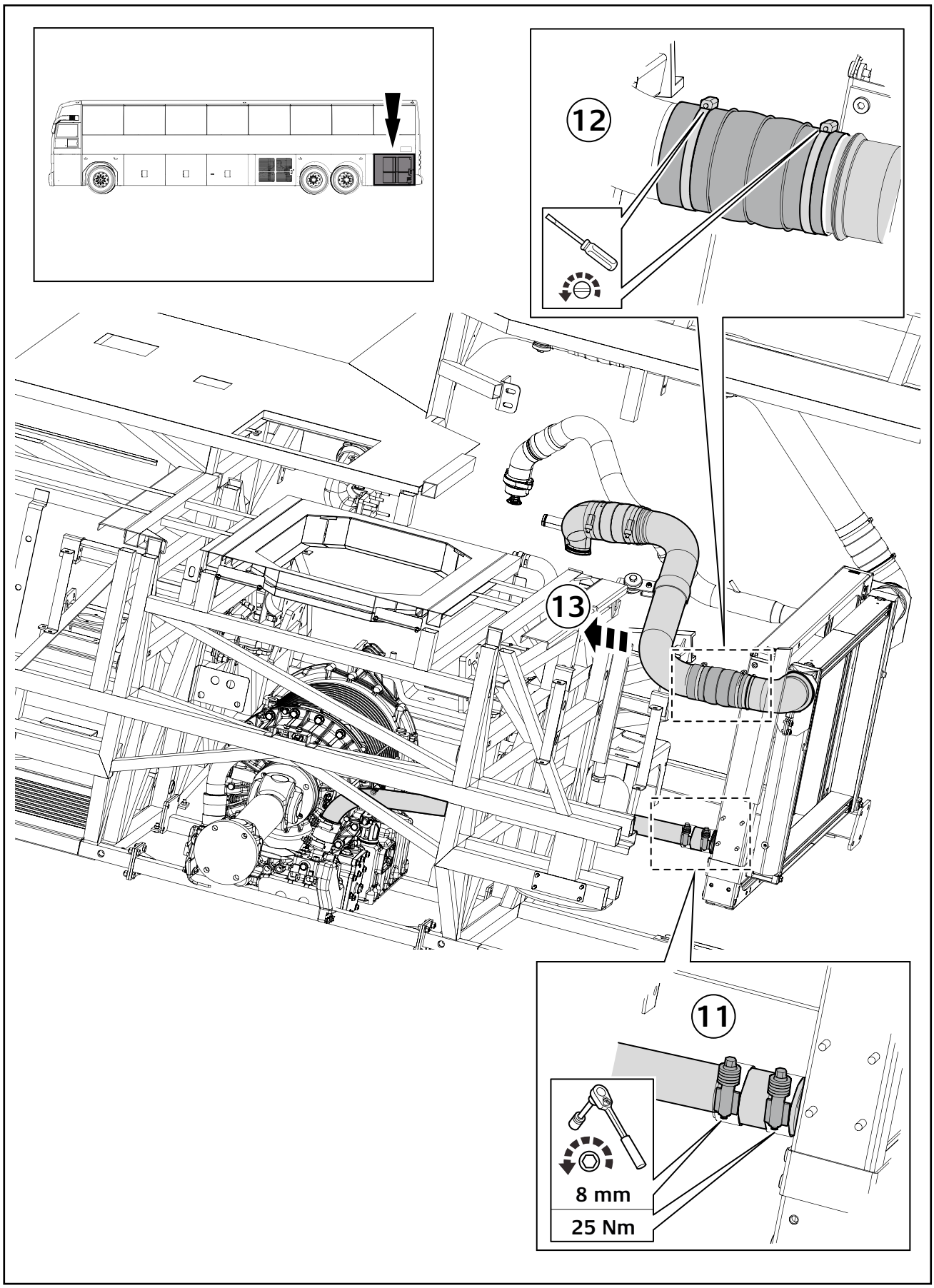

3.1. REMOVAL OF THE RADIATOR

14. Place the radiator lifting jack under the vehicle.

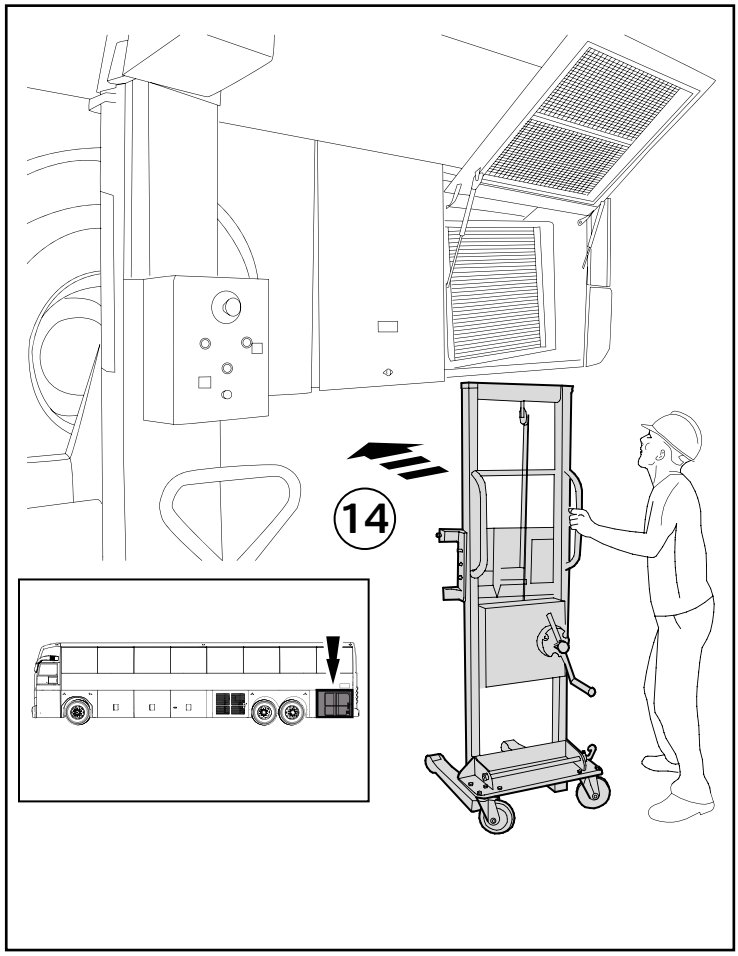

WARNING

Before dismounting the radiator, check that the piping and fixations have been completely disconnected.

15. Loosen the right and left side bracket bolts then remove radiator from the chassis completely.

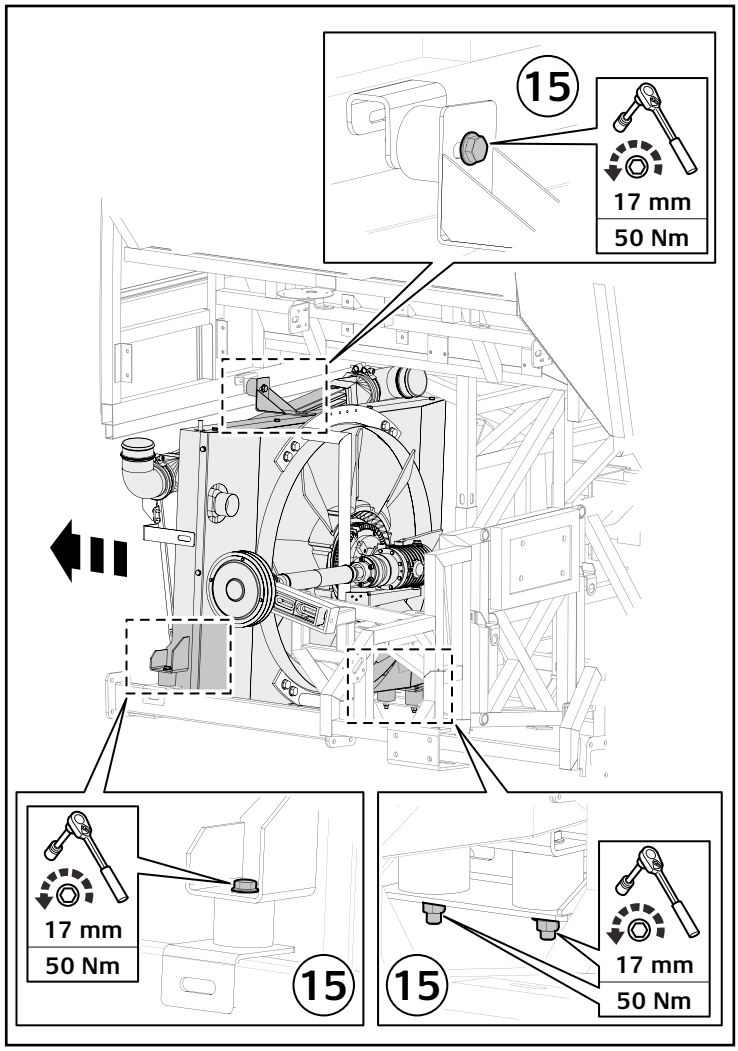

WARNING

When taking out the radiator from the body, be careful that it does not hit surrounding body parts.

3.2. REMOVAL OF THE RESERVOIR TANK

1. Disconnect the pump connection hose clamp (reservoir tank side), then remove the hose from reservoir, drain coolant.
2. Disconnect the hose (connect to the engine air ventile) clamp, then remove hose from reservoir.
3. Disconnect drainage hose connection clamp bolts, then remove the hose from the radiator.
4. Disconnect the hose which connects the radiator with air ventile, then remove hose from radiator.

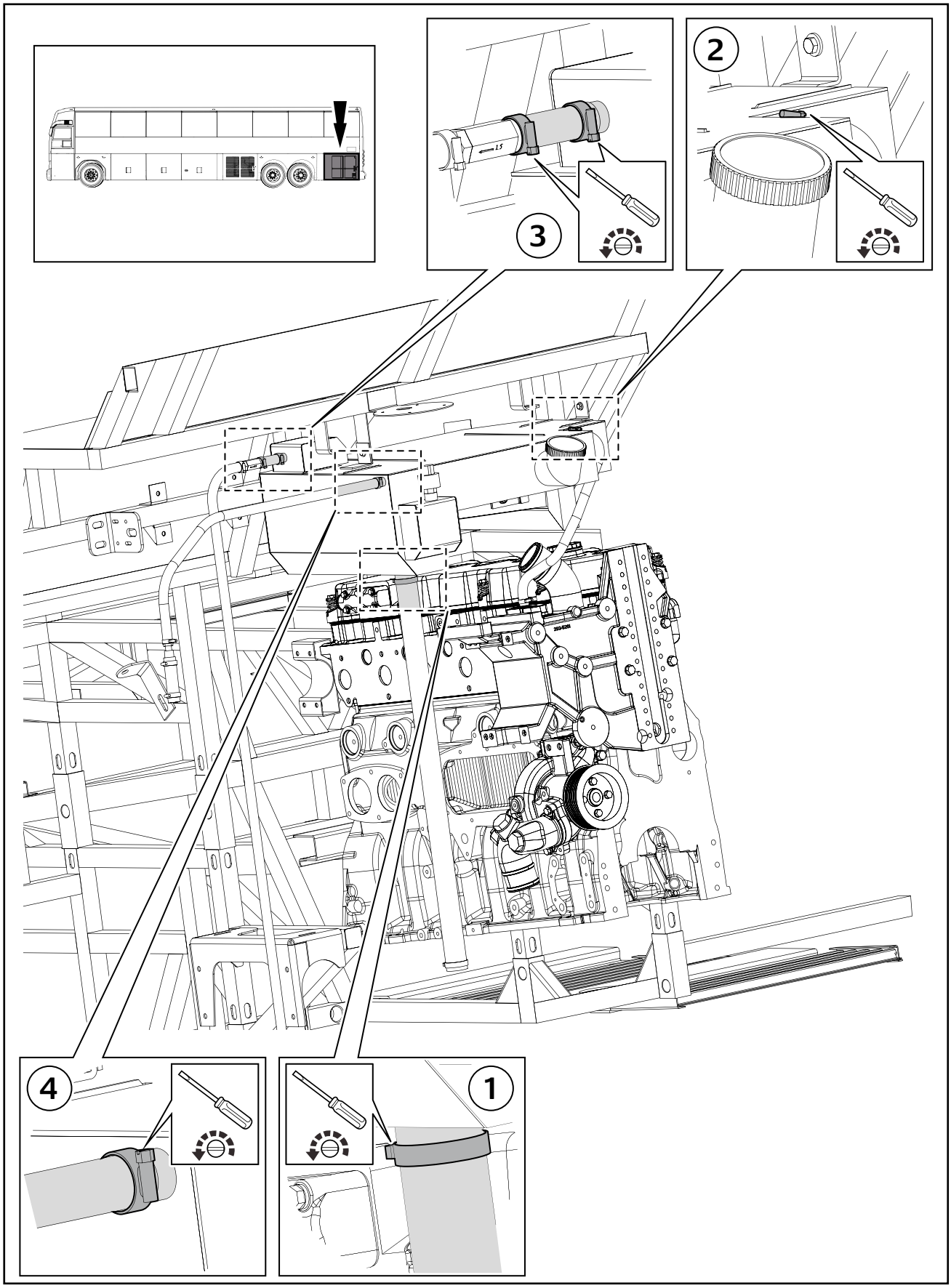

3.2. REMOVAL OF THE RESERVOIR TANK

5. Disconnect the reservoir tank chassis connection bolts and nuts, tool size 13 mm then remove the reservoir tank from vehicle.

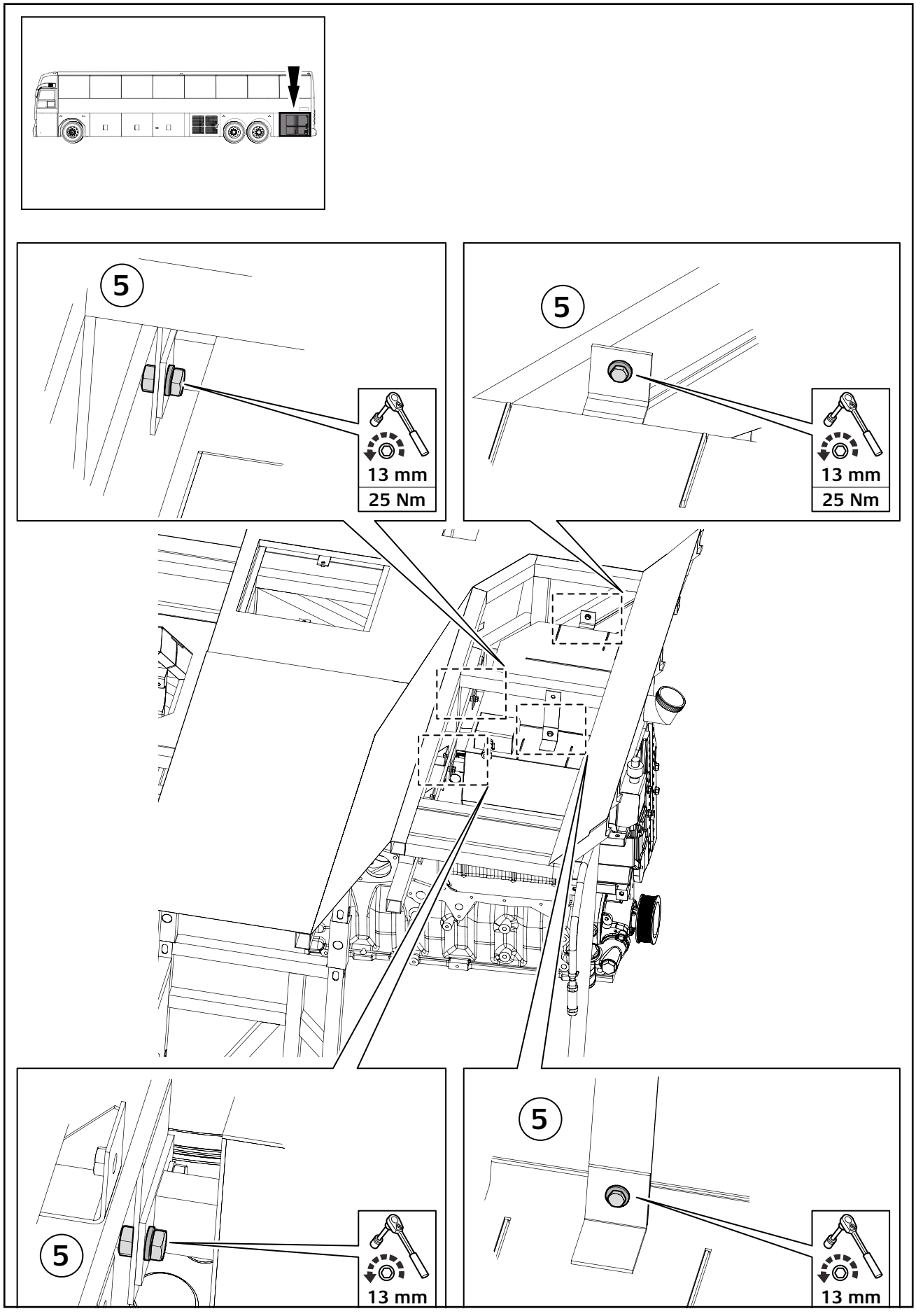

Removal Sequence;

24 - 26 - 25
> 23
27 - 28
20 - 21 - 22
> 19
30 - 33 - 21 - 32
37 - 38 - 34 - 39 > 16
35 - 33 - 34
> 29
30 - 33 - 31 - 32
1-10-9-13-12-14
11 - 6 - 7 - 8 > 1
3 - 5 - 4 - 2
48 - 44 - 45 - 46 - 48
48 - 41 - 42 - 43
50 - 51 - 52
57 - 56 > 40
55 - 56
60 - 59
60 - 58

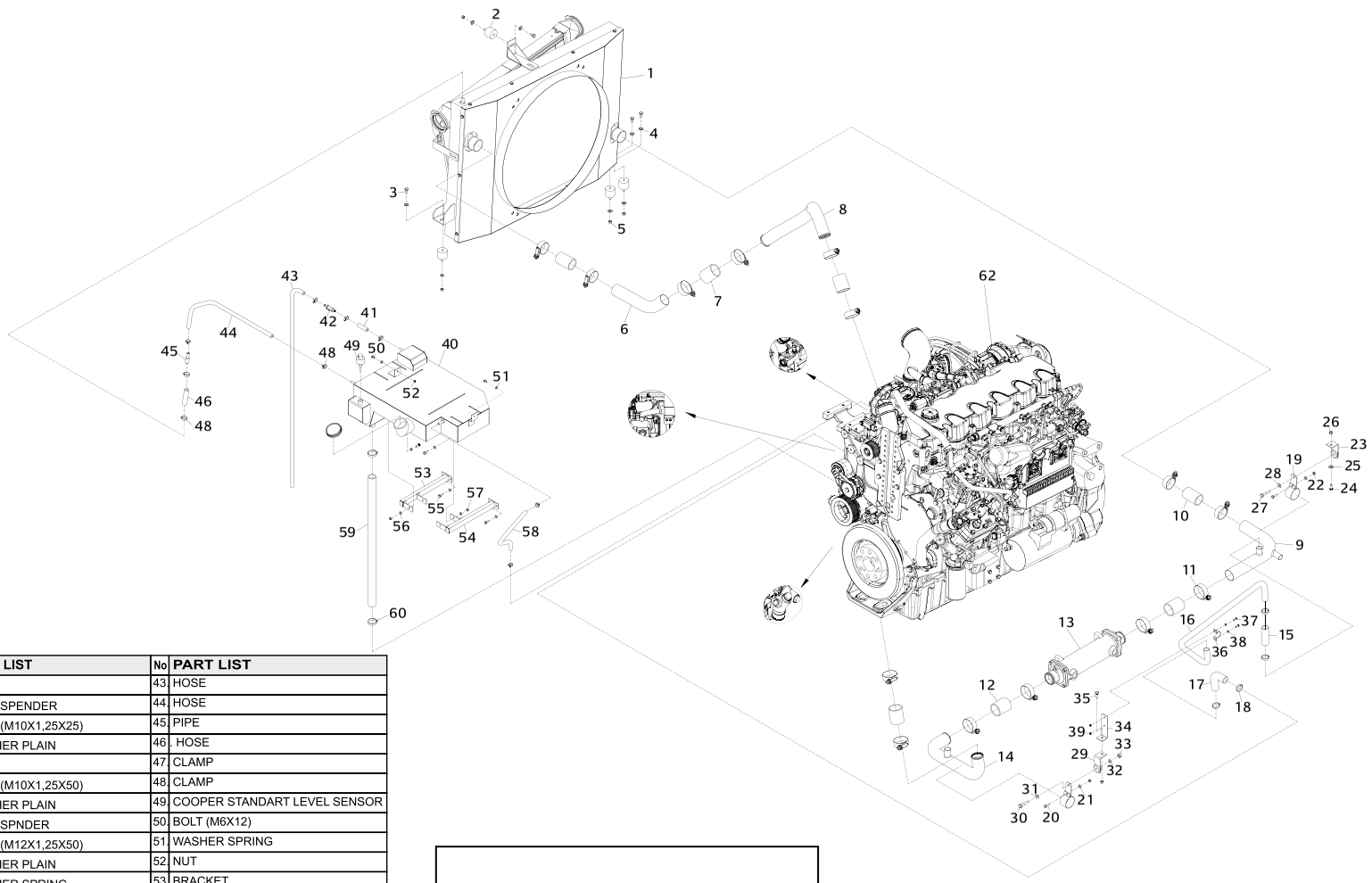

No	PART LIST	No	PART LIST	No	PART LIST
1.	RADIATOR	22.	NUT	43.	HOSE
2.	RADIATOR HAMMER BELLOW	23.	L - SUSPENDER	44.	HOSE
3.	BOLT (M10X1,25X16)	24.	BOLT (M10X1,25X25)	45.	PIPE
4.	WASHER PLAIN	25.	WASHER PLAIN	46.	HOSE
5.	NUT	26.	NUT	47.	CLAMP
6.	HOT WATER PIPE ENTRANCE TO RADIATOR	27.	BOLT (M10X1,25X50)	48.	CLAMP
7.	HOSE	28.	WASHER PLAIN	49.	COOPER STANDART LEVEL SENSOR
8.	HOT WATER THERMOSTAT EXIT PIPE	29.	L - SUSPNDER	50.	BOLT (M6X12)
9.	COLD WATER RADIATOR EXIT PIPE	30.	BOLT (M12X1,25X50)	51.	WASHER SPRING
10.	AIR VENTILE HOSE	31.	WASHER PLAIN	52.	NUT
11.	CLAMP	32.	WASHER SPRING	53.	BRACKET
12.	HOSE	33.	NUT	54.	BRACKET
13.	COOLER	34.	L - BRAKET	55.	BOLT (M8X1,25X20)
14.	COLD WATER PIPE	35.	BOLT (M10X25)	56.	WASHER PLAIN
15.	STRAIGHT HOSE	36.	CLAMP	57.	NUT
16.	ENGINE-OIL COOLER BYPASS LINE	37.	BOLT (M6X16)	58.	HOSE
17.	HOSE WATER	38.	WASHER SPRING	59.	HOSE
18.	CLAMP	39.	NUT	60.	CLAMP
19.	CLAMP	40.	EXPANSION TANK	61.	COVER
20.	BOLT (M8X1,25X16)	41.	HOSE		
21.	WASHER PLAIN	42.	VENTILE		

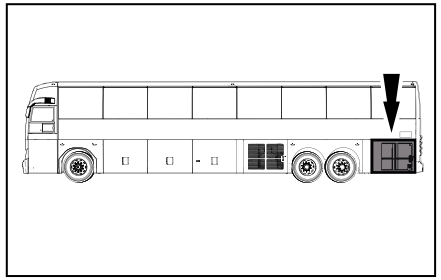

Removal Sequence;

9 - 17 - 15 - 16 - 8 - 10
2
> 1
2 - 4 - 3
9 - 17 - 13 - 11 - 12 - 14 - 7
22 - 19 - 20 - 21 13
> 18 > 12
23 - 25 - 24 - 21 15

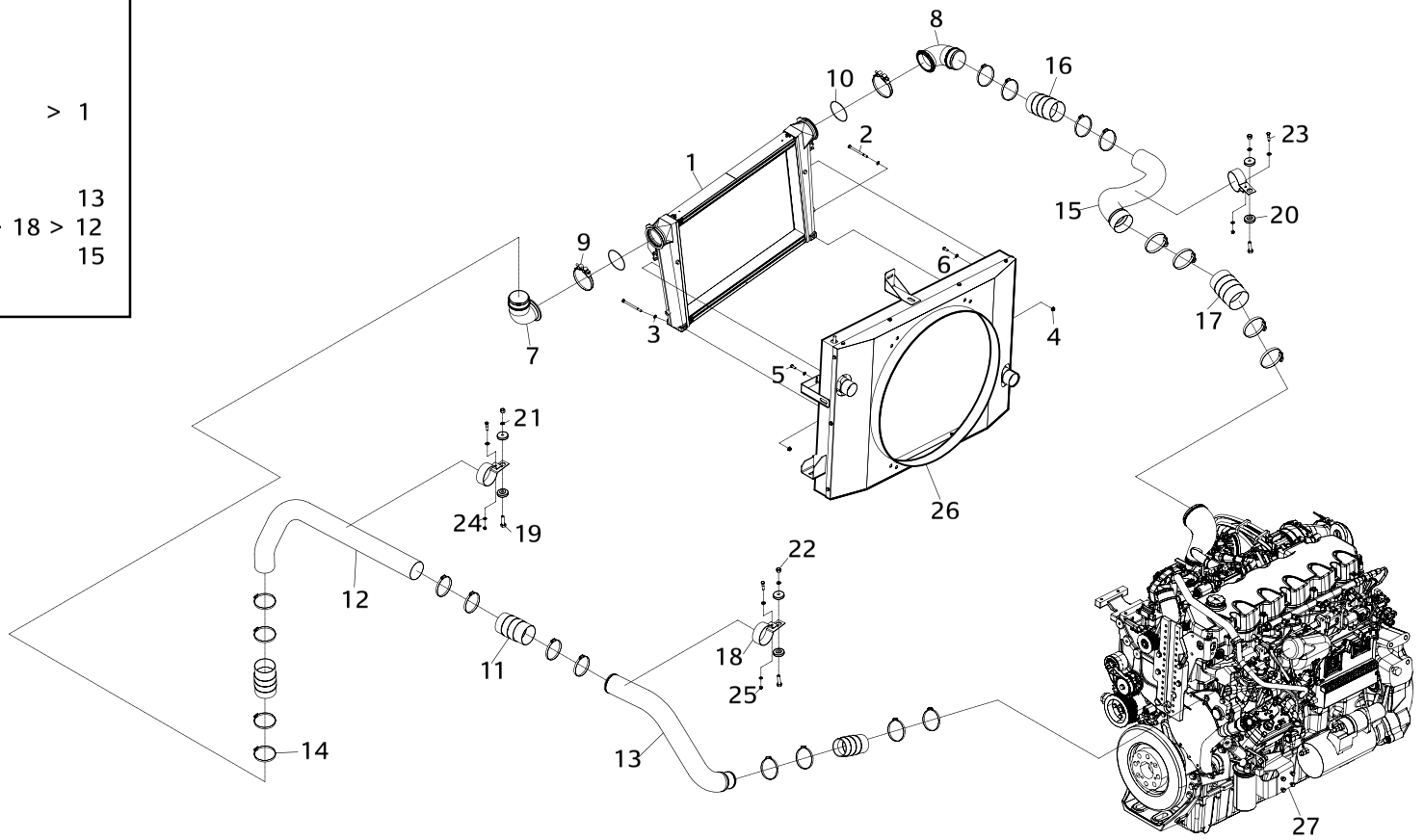

No	PART LIST
1	INTERCOOLER
2	BOLT (M8X1,25X110)
3	WASHER PLAIN
4	FLANGE NUT (M8X1,25)
5	BOLT (M8X1,25X20)
6	WASHER SPRING
7	ELBOW
8	ELBOW
9	CLAMP NORMAL
10	O-RING
11	SPIRAL HOSE
12	COLD AIR PIPE
13	COLD AIR ENGINE ENTRANCE PIPE
14	CLAMP
15	HOT AIR PIPE
16	SPIRAL HOSE
17	SPIRAL HOSE
18	CLAMP
19	BOLT (M12X1,25X50)
20	BELLOW
21	WASHER SPRING
22	NUT
23	BOLT (M8X1,25X30)
24	WASHER SPRING
25	NUT
26	RADIATOR
27	ENGINE

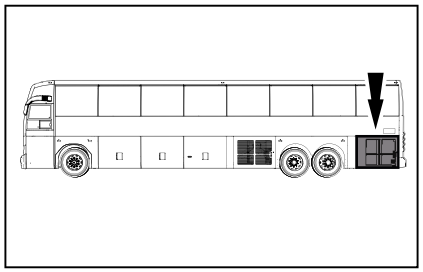

4. CLEANING PROCEDURE

Run the engine and keep the coolant at a temperature of approximately 194°F such that the thermostat valves remain open and the coolant circulates continuously in the radiator.

- To increase the coolant temperature quickly, cover the front of the radiator with cardboard or a similar material.
- If cleaning is carried out after a large amount of rust has accumulated,the radiator may start to leak.
- Carefully examine the radiator for leaks after cleaning the cooling system. Soft water to be used should have the following properties.

REQUIRED PROPERTIES OF SOFT WATER.	
Total hardness	300 ppm or less
Sulfate SO_4	100 ppm or less
Chloride Cl	100 ppm or less
Total dissolved solids	500 ppm or less
pH	6 to 8

CAUTION

Do not use hard water as it causes scale and rust.

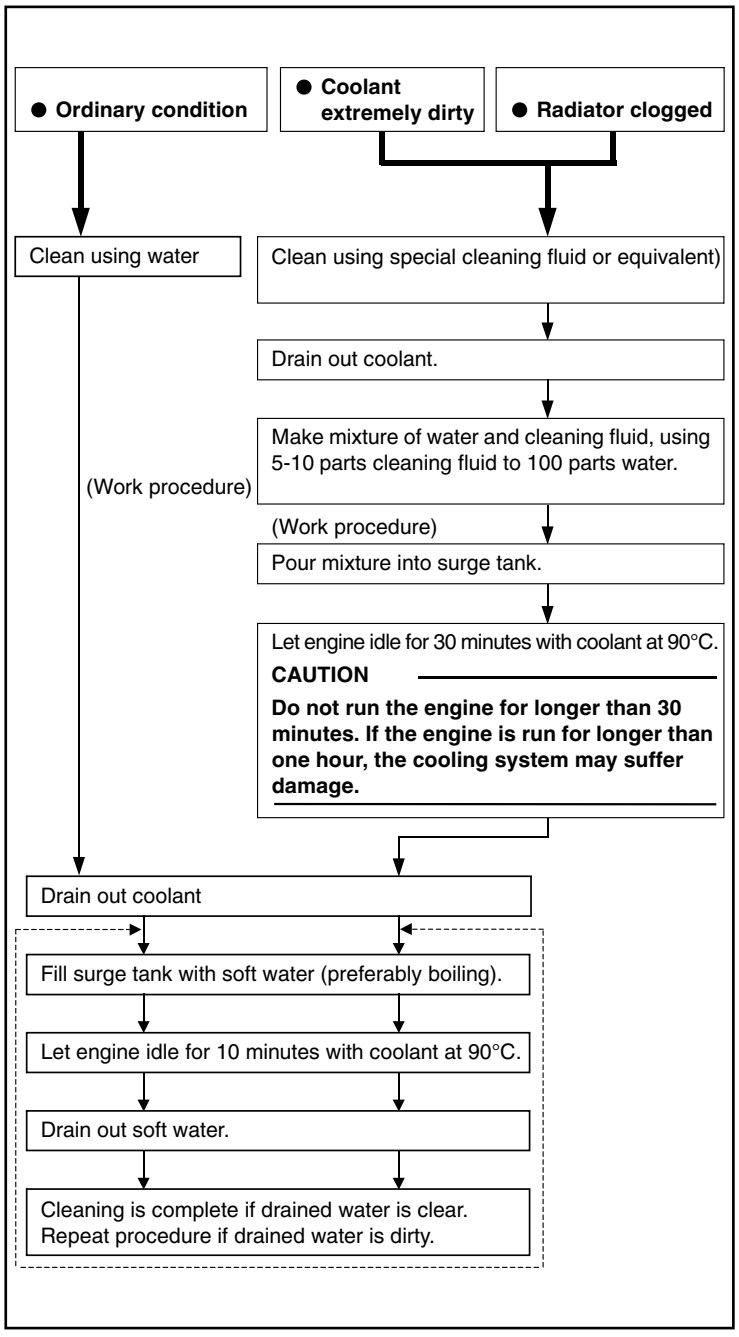

As shown on the left, the cleaning method for the cooling system depends on the system's condition.

WARNING

Coolant, Antifreeze, and Radiator Antirust are flammable. Keep them away from heat and naked flames.

DANGER

If you accidently splash Coolant, Antifreeze, or Radiator Antirust in your eyes, wash it out immediately with water and seek medical help..

4. CLEANING PROCEDURE

Note

- After cleaning the cooling system with cleaning fluid, fill it with coolant as soon as possible.
- To prevent freezing of the coolant and corrosion of the cooling system, add the specified amount of Antifreeze or Radiator Antirust to the coolant.

4.1. AIR BLEEDING OF COOLING SYSTEM

- Fill the system with coolant until the coolant level in the surge tank is slightly lower than the tank opening. If the level were up to the opening, the coolant would over flow the opening as it becomes warm and expands.
- Let the engine idle with the coolant at a temperature of 90°C until the cooling system is completely bled of air.
- After bleeding the cooling system of air, add coolant to the reservoir tank and surge tank as required.

4.2. GAS LEAK TESTING

The presence of air or exhaust gas in the coolant increases corrosion and rust in the cooling system. Check for air or exhaust gas in the coolant using the following procedure.

- Remove the pressure cap.
- Run the engine and let the coolant temperature reach approximately 90°C.
- If bubbles appear continuously in the coolant, air or exhaust gas is leaking in to the cooling system.
- If the coolant contains air, the cylinder head bolts, water pump mounting bolts, or hose connections may be loose. Alternatively, the hoses may be damaged.
- If the coolant contains exhaust gas, it is possible that the cylinder head gasket is damaged or that the cylinder head is cracked.



WARNING

Make sure the coolant is cool before loosening the pressure cap. If the coolant is hot, it may spray out.

Do not use hard water as it causes scale and rust.



CAUTION

If the tension of the V belts and are excessive, not only the belts but also the bearings of the components driven by them will be damaged.
Keep the V-belts free of oil and grease. If contaminated with oil or grease, they may slip, causing poor cooling performance of the fan.

5. TROUBLESHOOTING

SYMPTOMS / POSSIBLE CAUSES			Overheating (insufficient cooling)	Overcooling	Abnormal noise	Excessive coolant loss
Possible Causes	V-belt	Loose or broken	X		X	
		Excessive tension			X	
		Oil on belt	X			
	Automatic cooling fan coupling	Bearing faulty	X		X	
		Bimetal dameged	X			
		Bimetal contaminated with foreign matters	X	X		
		Silicone oil leakage	X		X	
	Idler Pulley	Bearing faulty	X		X	
	Bearing Case	Bearing faulty	X		X	
Water pump		Water pump fitted poorly	X			X
		Bearing defective	X		X	
		Impeller defective	X			
		Unit seal defective	X			X
		Loose fit between shaft and flange and/or impeller	X		X	
Thermostat		Case fitted poorly	X			X
		Gasket defective	X			X
		Valve opening temperature too high; valve remains closed	X			
		Valve opening temperature too low; valve remains open		X		
		Water leaking from water temperature sensor, overheat unit, and/or water temperature gauge unit	X			X
Radiator		Space between core and fins clogged				
		Core cracked and/or soldered joints separated	X			X
Surge tank		Pressure cap not sufficiently airtight	X			
		Water leaking from water level sensor	X			X
Cooling Fan		Fan shroud fitted poorly	X		X	
Oil cooler		Oil cooler fitted poorly	X			X
		Gasket defective	X			X
Cylinder Head		Cylinder head fitted poorly	X			X
		Gasket defective				X
Coolant quantity insufficient and/or coolant dirty			X			X
Coolant passages dirty and/or clogged			X			
Hoses fitted poorly						X
Ambient temperature extremely low				X		

03 AIR INTAKE

Rev.00 / 25.03.14

1. TOOLS **2**

2. SPECIFICATION **3**

2.1. Air Intake Pr Engine 4

2.2. Pr Engine Air Compressor 4

3. SERVICE PROCEDURE **5**

3.1. Removal Of The Air Filter Element 5

3.1. Removal Of The Air Filter Element 6

3.2. Removal Of The Intercooler Pipes 7

3.3. Removal Of The Filter Housing 8

3.4. Removal Of The Air Intake System Pipes 9

3.5. Exploded View Of The Air Intake System 10

3.6. Exploded View Of The Turbocharger Pipes 11

4. CHECKING THE RE-EMPLOYABILITY OF THE FILTER ELEMENT **12**

5. CLEANING OF THE FILTER ELEMENT **13**

5.1. Cleaning Of The Filter Element By Spraying 13

5.2. Cleaning By Washing 13

6. MOUNTING OF THE FILTER ELEMENT **14**

7. TROUBLESHOOTING **14**

GENERAL

- If work is performed by people who do not have the necessary training to carry out the work or if this information is handled carelessly or totally ignored, this may result in severe injury and/or death. Inaddition, serious damage to the vehicle may occur.
- Always read the safety instructions in full before starting certain operations. The safety instructions stipulate which aspects must be considered to achieve maximum safety. The information is given that is very important for health and safety.
- Always work in adequately ventilated rooms with sufficient lighting, free from dirt and clutter. Never leave tools or parts lying around, keep away from (high-) voltage sources that present a risk of short-circuiting. Always wear protective clothing. Do not wear any damaged or loose-fitting clothing and remove jewelry before starting the work. In case of long hair use hairnet.

1. TOOLS

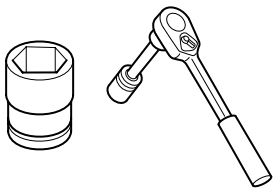 Impact Socket	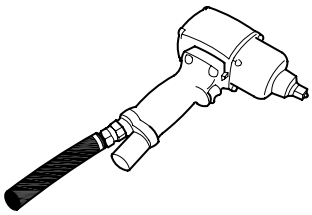 Impact Wrenches	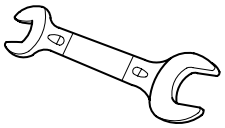 Open Wrench Double Ended
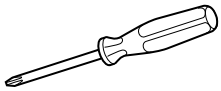 Screw Driver		

2. SPECIFICATION

2.1. AIR INTAKE PR ENGINE

CUMMINS 425 HP				
Air Intake System	Maximum Allowable w/Clean Dry Element	3.7 kPa	14.9 in H_2O	0.537 psi
Restriction Limits	Maximum Allowable w/Dirty Element	6.2 kPa	14.9 in H_2O	0.899 psi

2.2. PR ENGINE AIR COMPRESSOR

CUMMINS 425 HP	
Swept volume	30.21 cu in
Piston diameter	2.95 in
Stroke	2.21 in
Flow capacity	147.9 gpm; 8 bar
Power draw	6.7 hp; 8 bar
Intake max. pressure	43.5 psi
Working max. pressure	145 psi
Max discharge pressure	203 psi
Number of cylinders	6
Max rpm	3000 rpm
Weight	3204 lb
Length	133.9 in
Height	92.5 in
Width	59 in

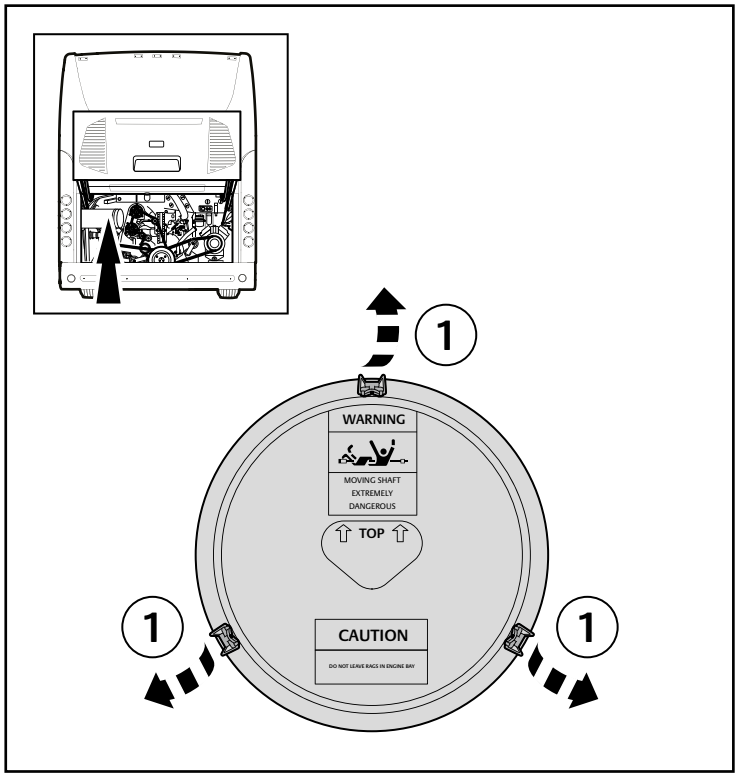

3. SERVICE PROCEDURE

3.1. REMOVAL OF THE AIR FILTER ELEMENT

1. Unlock the 3 clips.

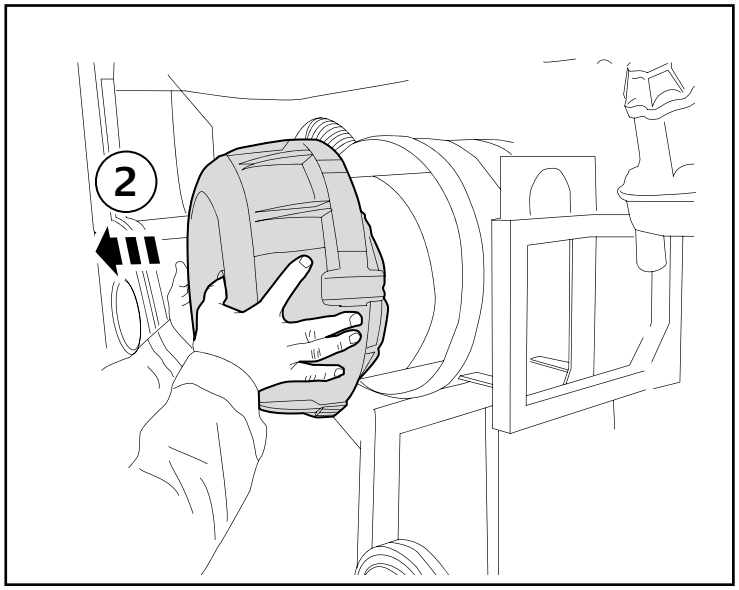

2. Remove the air filter cover.

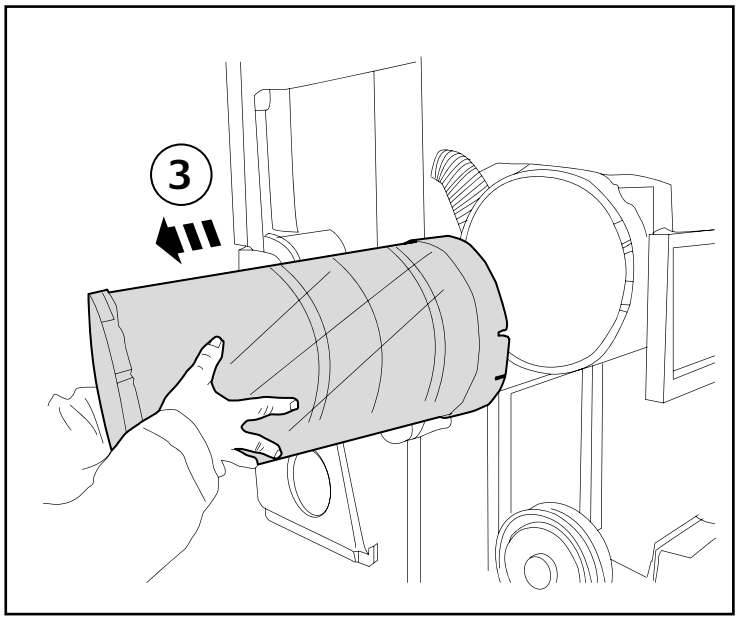

3. Remove the air filter.

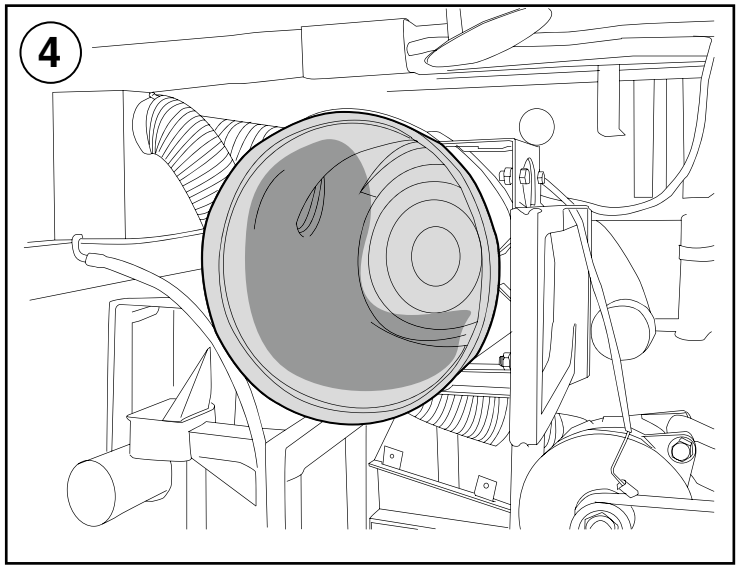

3.1. REMOVAL OF THE AIR FILTER ELEMENT

4. Clean the inside of the air filter housing and the air filter cover.

3.2. REMOVAL OF THE INTERCOOLER PIPES

1. Air filter should be removed (See 3.1). Remove the hot air pipe clamp bolts (1, 2) from both turbocharger and intercooler (that exit from turbocharger and entrance to the intercooler and remove intercooler pipes from the vehicle.
2. Remove the cold air pipe clamp connection bolts (3, 4, 5) from both intercooler and engine (that exit the intercooler and enter the engine).

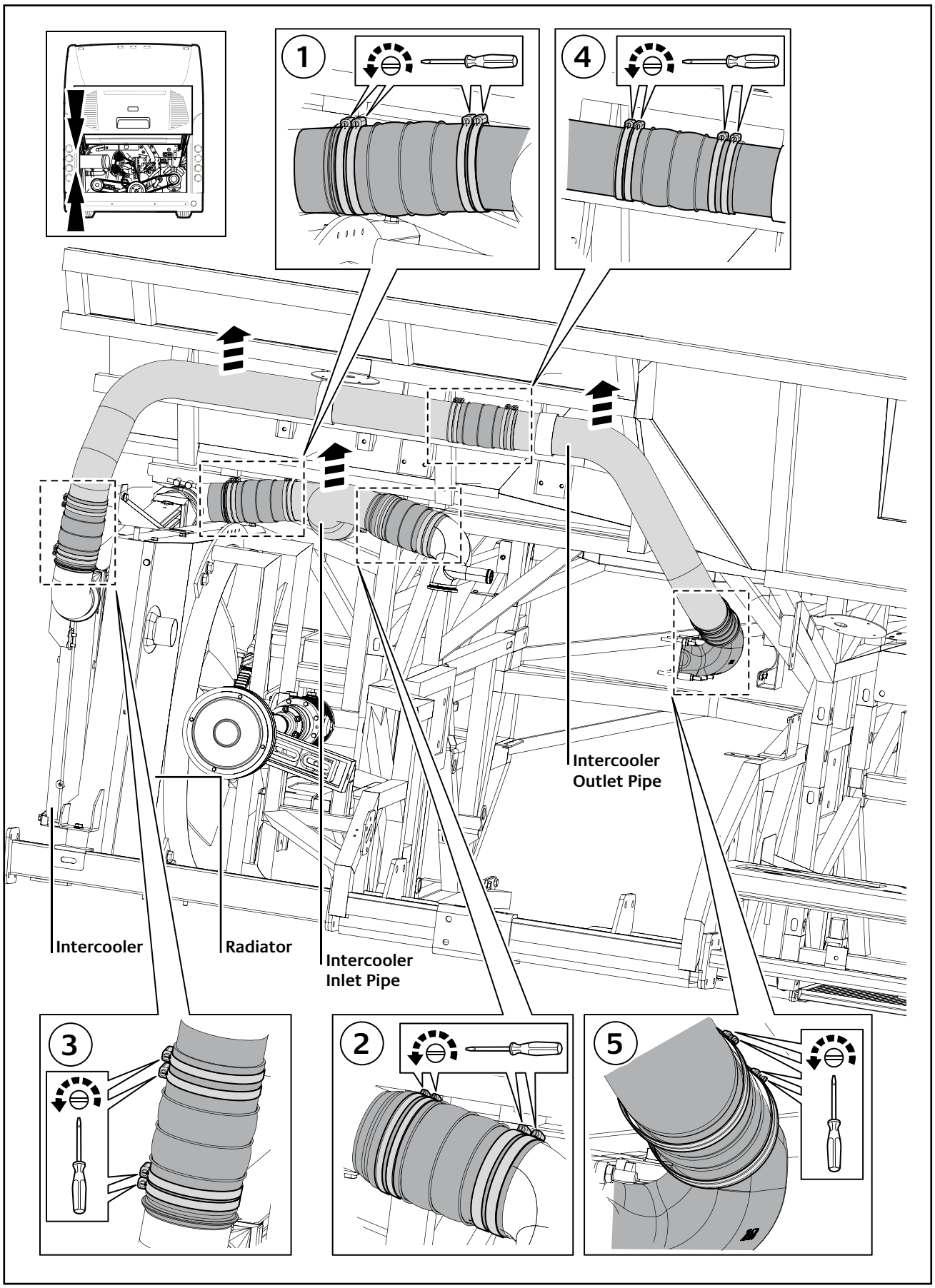

3.3. REMOVAL OF THE FILTER HOUSING

1. Loosen the filter housing pipes connection pipes clamp (1,2) and completely remove filter housing pipes from the filter housing.
2. Remove the air filter house and chassis connection bolt (3) (tool size 13 mm) and completely remove the air filter house from the chassis.

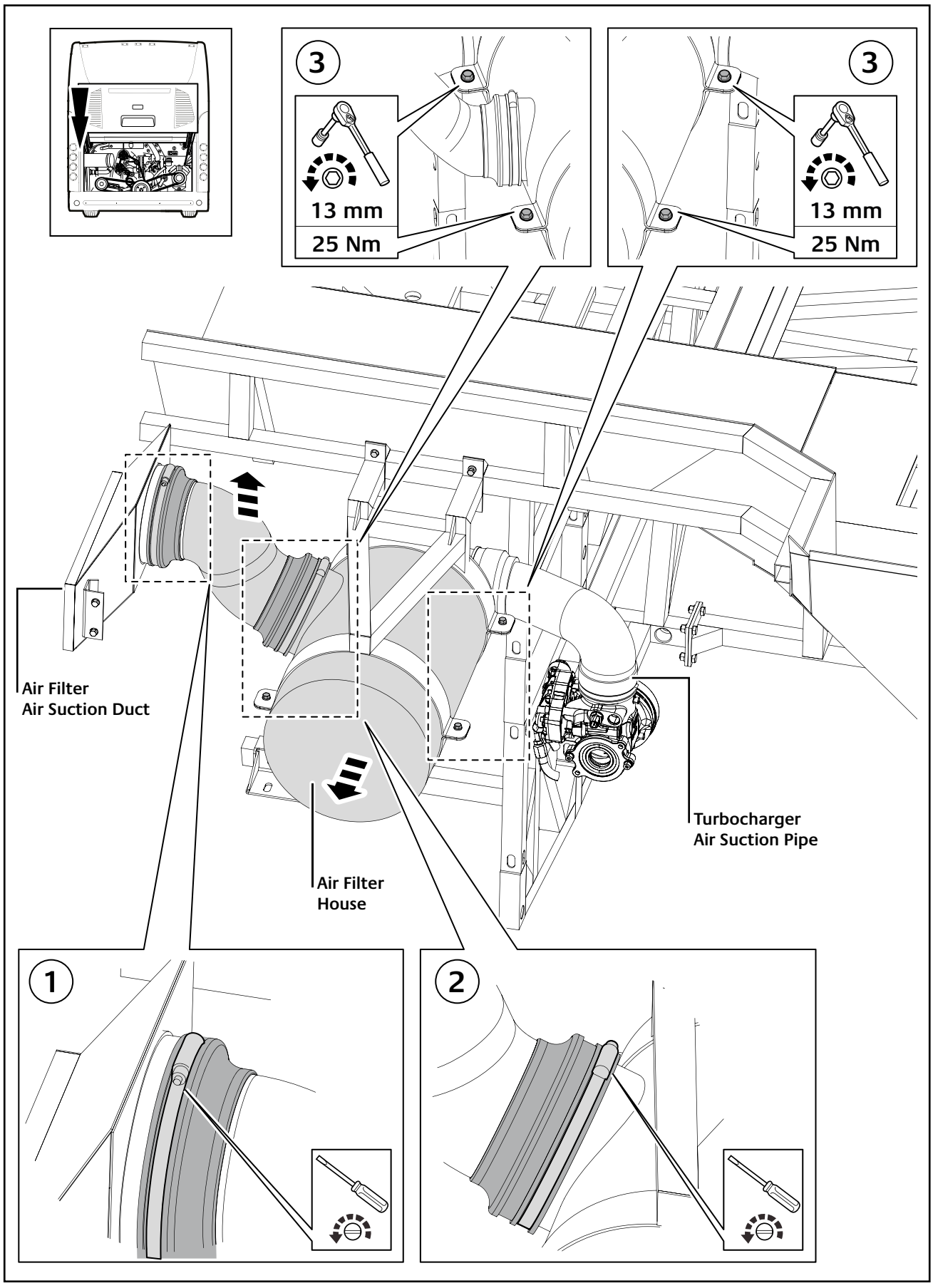

3.4. REMOVAL OF THE AIR INTAKE SYSTEM PIPES

1. Loosen the air intake system pipes connection clamp (1), Turbocharger (Engine) connection (2) and remove pipes from the vehicle completely.

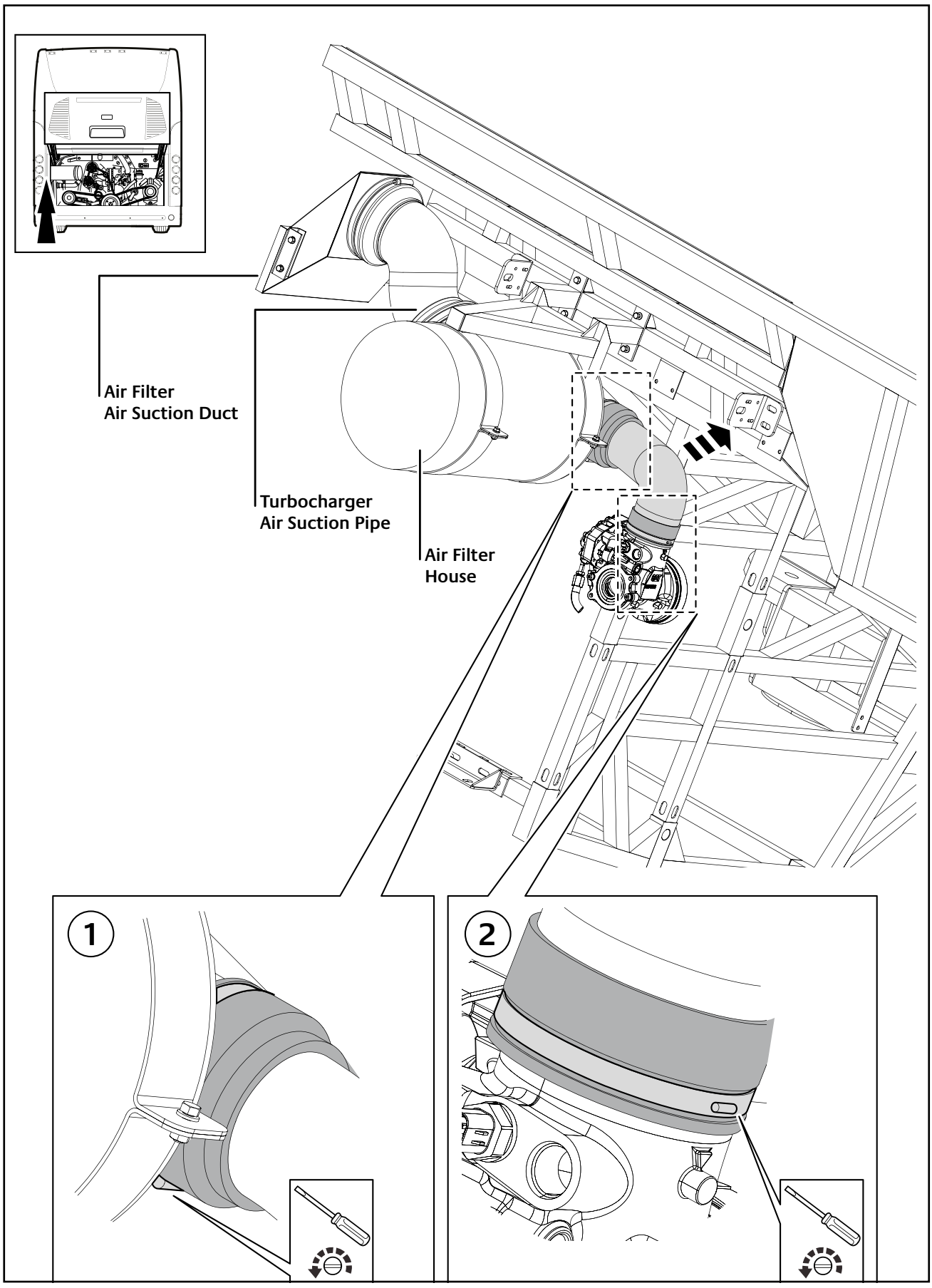

3.5. EXPLODED VIEW OF THE AIR INTAKE SYSTEM

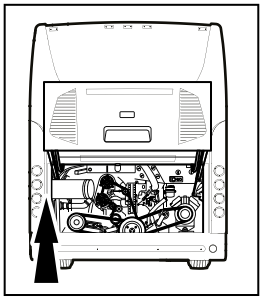

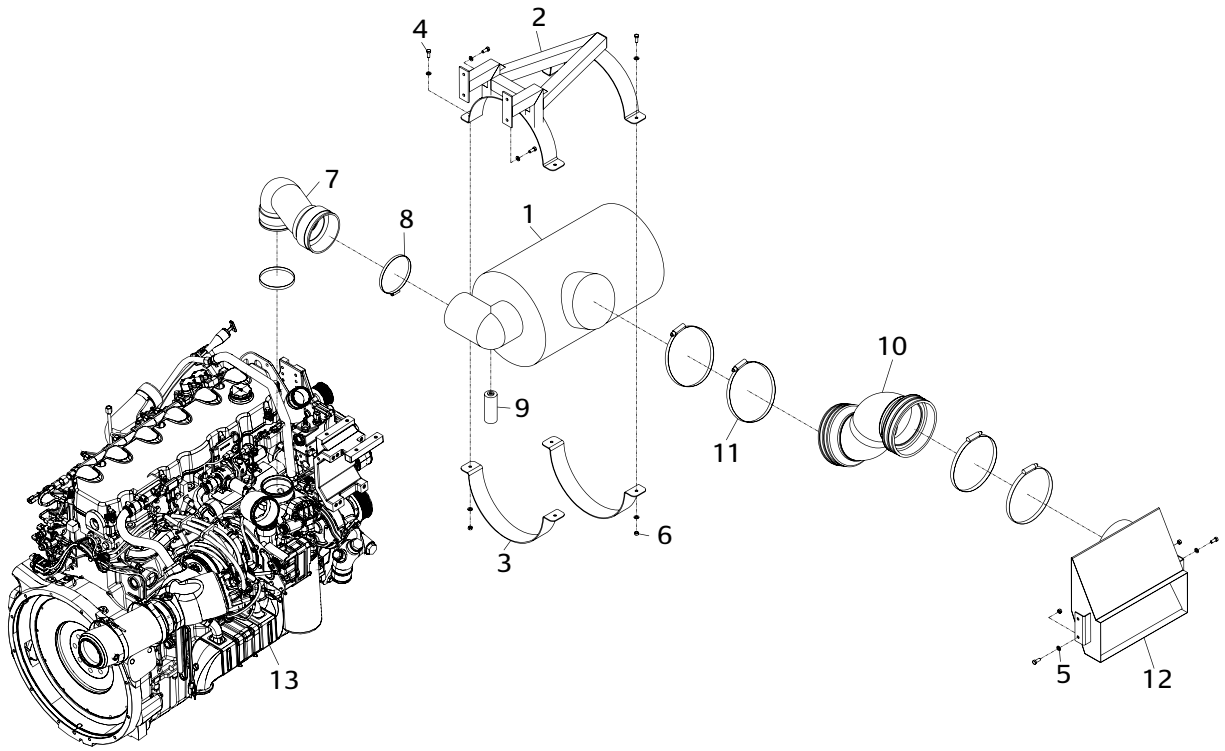

Removal Sequence :

4 - 6 - 5 > 12
12 - 11 > 10
8 - 7
4 - 6 - 5 - 2 > 3 > 1
9

Note:
Installation sequence is reverse of removal sequence

CAUTION
Clamps tightening torque 57 Nm.

No	PART LIST	No	PART LIST
1.	AIR FILTER	8.	CLAMP BAND
2.	BRACKET	9.	ELECTRICAL INDICATOR
3.	BELT	10.	FILTER FIRST SUCTION HOSE
4.	BOLT (M8X1,5X20)	11.	CLAMP BAND
5.	WASHER SPRING	12.	AIR SUCTION BOX
6.	NUT	13.	ENGINE
7.	FILTER ENGINE CONNECTION HOSE		

Removal Sequence:

9 - 17 - 15 - 16 - 8 - 10
2 > 1
2 - 4 - 3

9 - 17 - 13 - 11 - 12 - 14 - 7
22 - 19 - 20 - 21
23 - 25 - 24 - 21 > 18 > 12
13
15

Note:
Installation sequence is reverse of removal sequence

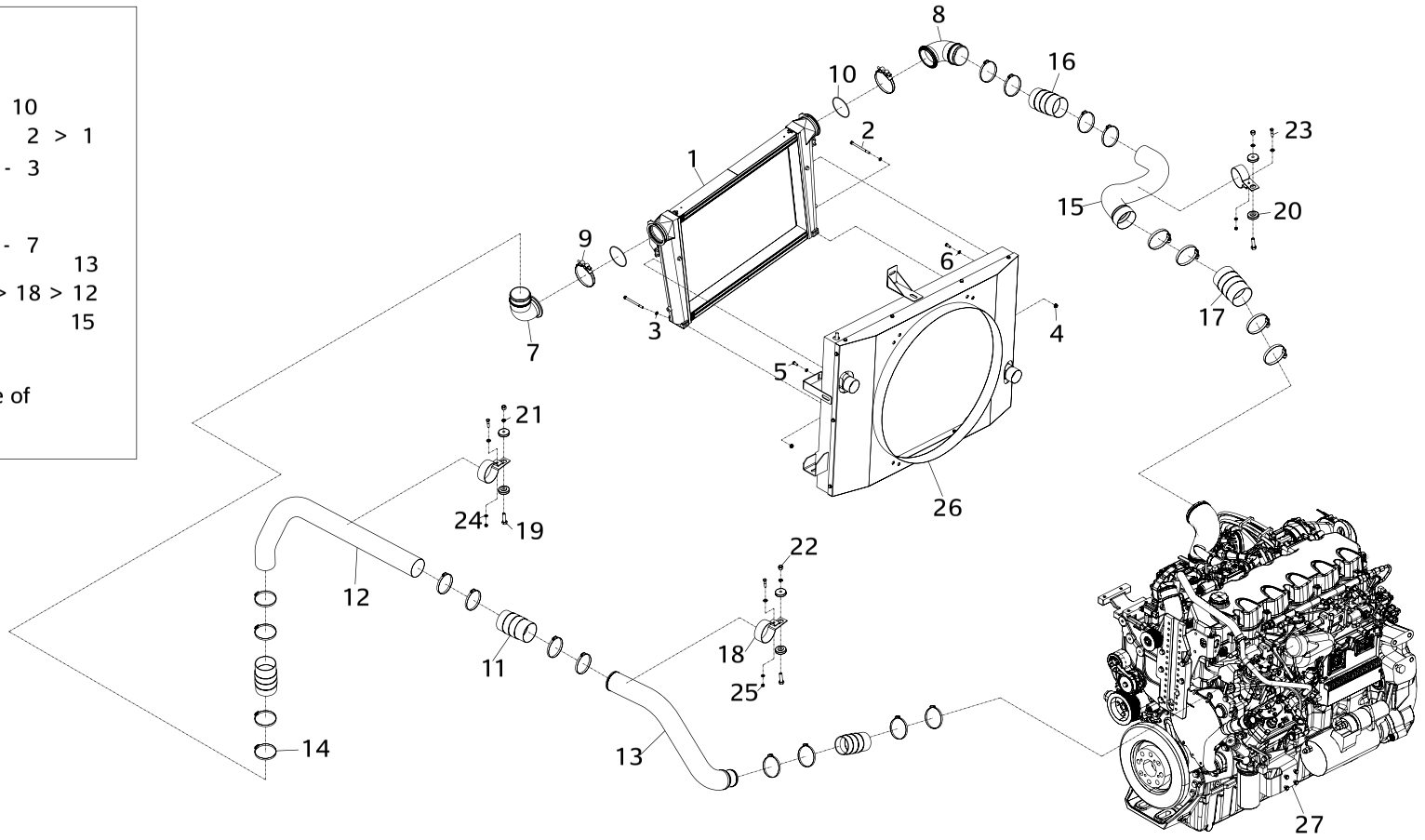

No	PART LIST
1.	INTERCOOLER
2.	BOLT (M8X1,25X110)
3.	WASHER PLAIN
4.	FLANGE NUT (M8X1,25)
5.	BOLT (M8X1,25X20)
6.	WASHER SPRING
7.	ELBOW
8.	ELBOW
9.	CLAMP NORMAL
10.	O-RING
11.	SPIRAL HOSE
12.	COLD AIR PIPE
13.	COLD AIR ENGINE ENTRANCE PIPE
14.	CLAMP
15.	HOT AIR PIPE
16.	SPIRAL HOSE
17.	SPIRAL HOSE
18.	CLAMP
19.	BOLT (M12X1,25X50)
20.	BELLOW
21.	WASHER SPRING
22.	NUT
23.	BOLT (M8X1,25X30)
24.	WASHER SPRING
25.	NUT
26.	RADIATOR
27.	ENGINE

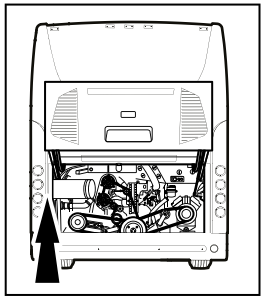

CAUTION
Clamps tightening torque 57 Nm.

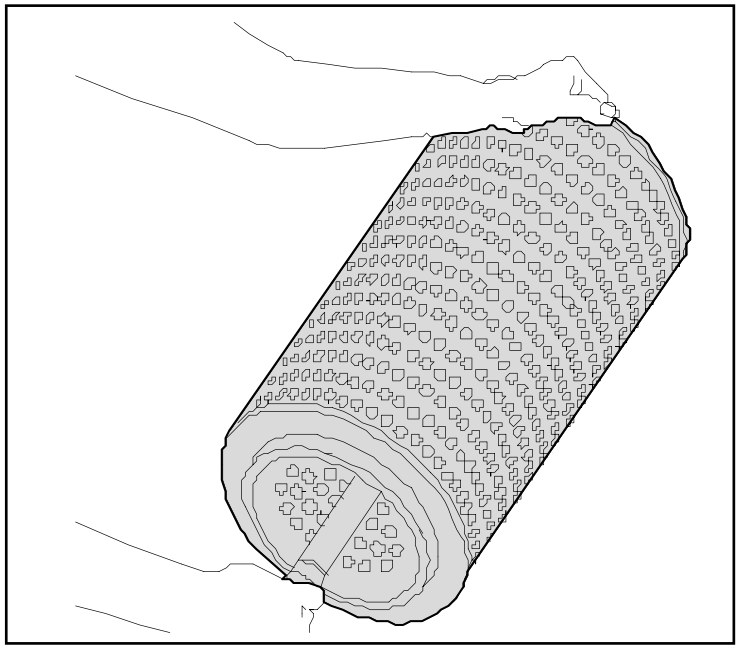

4. CHECKING THE RE-EMPLOYABILITY OF THE FILTER ELEMENT

1. Check the filter element regularly.
2. Illuminate the interior of the filter element by flashlight.
3. No cracks or holes should be visible on the filter element.
4. Check the seal on the forehead side of filter.
5. The seal must be elastic, clean and tearless.

CAUTION

Even if the filter has minor damage it must be changed, to prevent engine damage.

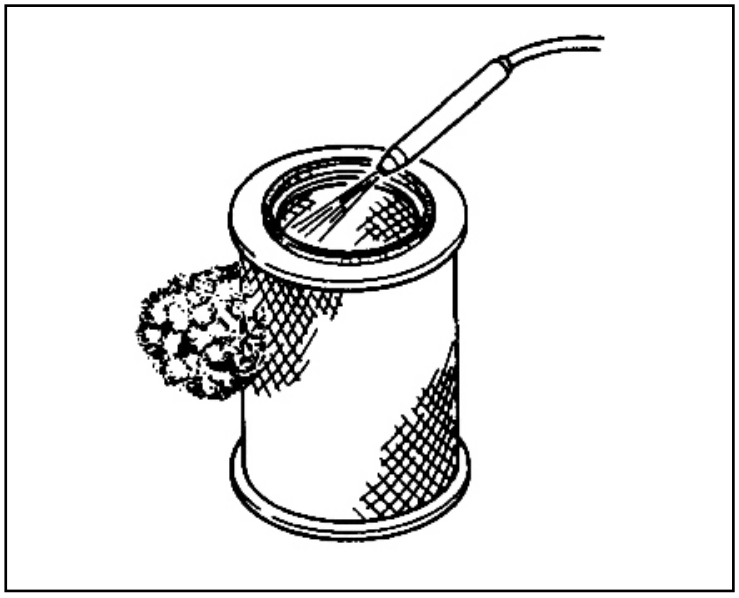

5. CLEANING OF THE FILTER ELEMENT

5.1. CLEANING OF THE FILTER ELEMENT BY SPRAYING

Spray pressured air (max 5 bar) to layers from outside. After that, spray the air from inside to outside until no more dust come out.

CAUTION

Do not clean the filter by shaking.

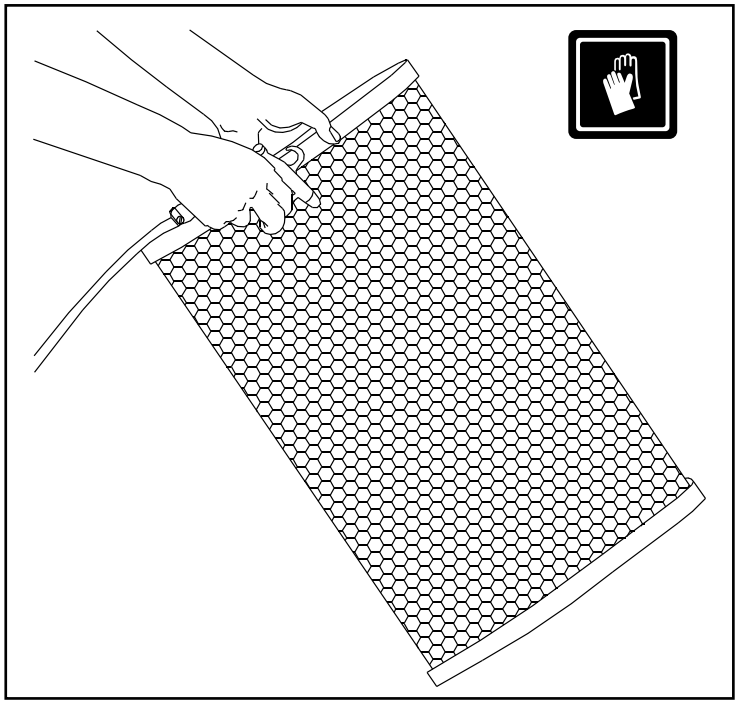

5.2. CLEANING BY WASHING

Use cleaners which is produced by filter fabricater or similar industrial cleaner. Protect your hands with a plastic glove.

Note:
Never use steam pressured cleaner, gasoline, soap or boiling liquids.

1. Pre-clean by spraying air.
2. Mitigate the filter by a cleaning solution at hand temperature for about 10 minutes.
3. Afterwards, move the filter forward and reverse in this washing solution for 5 minutes.
4. Then, clarify the filter by clean water until clear water appears.
5. Fling the filter element intensify.
6. Leave the filter to dry at room temperature.
7. Install filter only when it is completely dry.
8. Sign the number of the washing and cleaning on the forehead of the filter element by means of colored point.

CAUTION

- All filters have a finite life. After cleaning filter 5 times (check the number of the colored points) or the state of damage, renew the filter.
- Use only original M1 spare parts! If non original M1 air filter elements are used, the engine will not intake sufficient air and engine performance will be reduced.

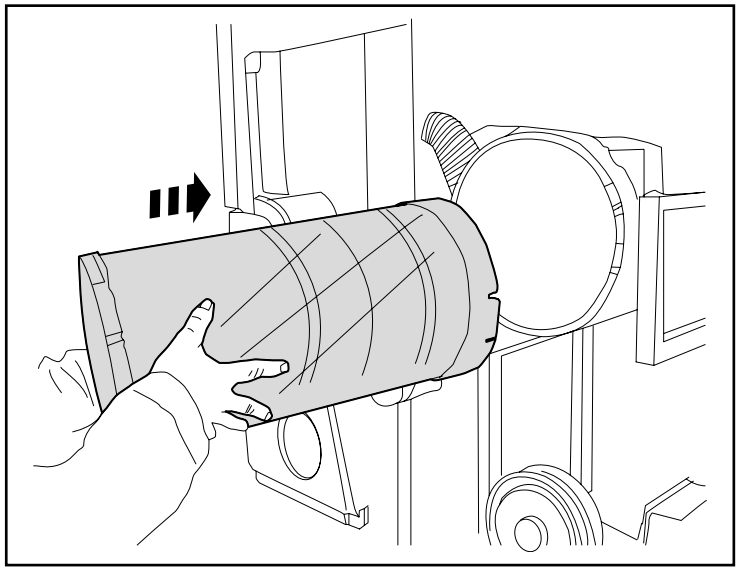

6. MOUNTING OF THE FILTER ELEMENT

1. Mount the filter element into the filter body up to reach filter element.
2. Filter element should not be broken at this procedure.
3. Seat the seal located forehead of the filter element to filter body completely.
4. Install the fixing bolt to (Ò) location and fasten it.
5. Mount the cleaned dust collecting vessel into place.

CAUTION

Check the impermeability of the all connection elements in intake system, if necessary, tighten the brackets. Do not overtighten spiral bolts (See torque table).

7. TROUBLESHOOTING

FAULT / CAUSE	Air Cleaner
	Clogged Air Cleaner Element
Engine Hard to Start	X

04 FAN DRIVE SYSTEM

Rev.00 / 25.03.14

1. TOOLS 2

2. SERVICE PROCEDURE 3

2.1. Removing the Fan Drive System Elements 3

2.1.1 Removing the V-Belt 3

2.1.2 Installation of the V-Belt 4

2.1.3 Removing the Fan Drive Radiator 5

2.2. EXPLODED VIEW OF THE Fan Drive 7

GENERAL

- If work is performed by people who do not have the necessary training to carry out the work or if this information is handled carelessly or totally ignored, this may result in severe injury and/or death. Inaddition, serious damage to the vehicle may occur.
- Always read the safety instructions in full before starting certain operations. The safety instructions stipulate which aspects must be considered to achieve maximum safety. The information is given that is very important for health and safety.
- Always work in adequately ventilated rooms with sufficient lighting, free from dirt and clutter. Never leave tools or parts lying around, keep away from (high-) voltage sources that present a risk of short-circuiting. Always wear protective clothing. Do not wear any damaged or loose-fitting clothing and remove jewelry before starting the work. In case of long hair use hairnet.

1. TOOLS

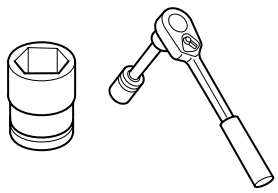 Impact Socket	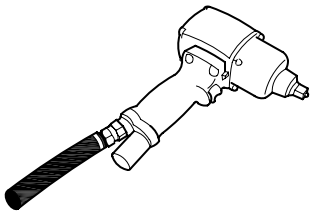 Impact Wrenches	 Hexagonal Keys 5
 T45 Key	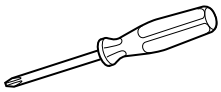 Screw Driver	

2. SERVICE PROCEDURE

2.1. REMOVING THE FAN DRIVE SYSTEM ELEMENTS

2.1.1 REMOVING THE V-BELT

1. Remove rear bumper.

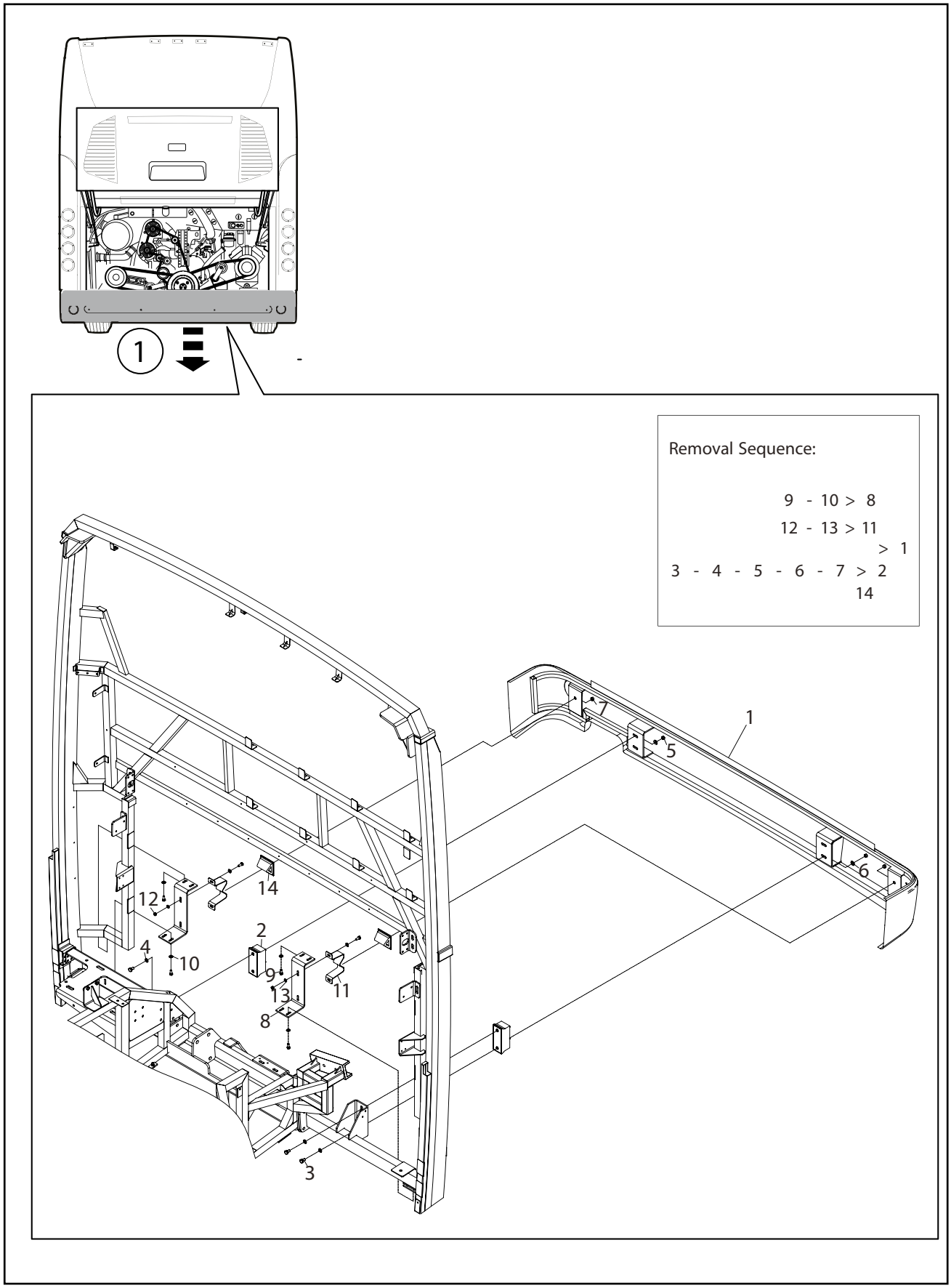

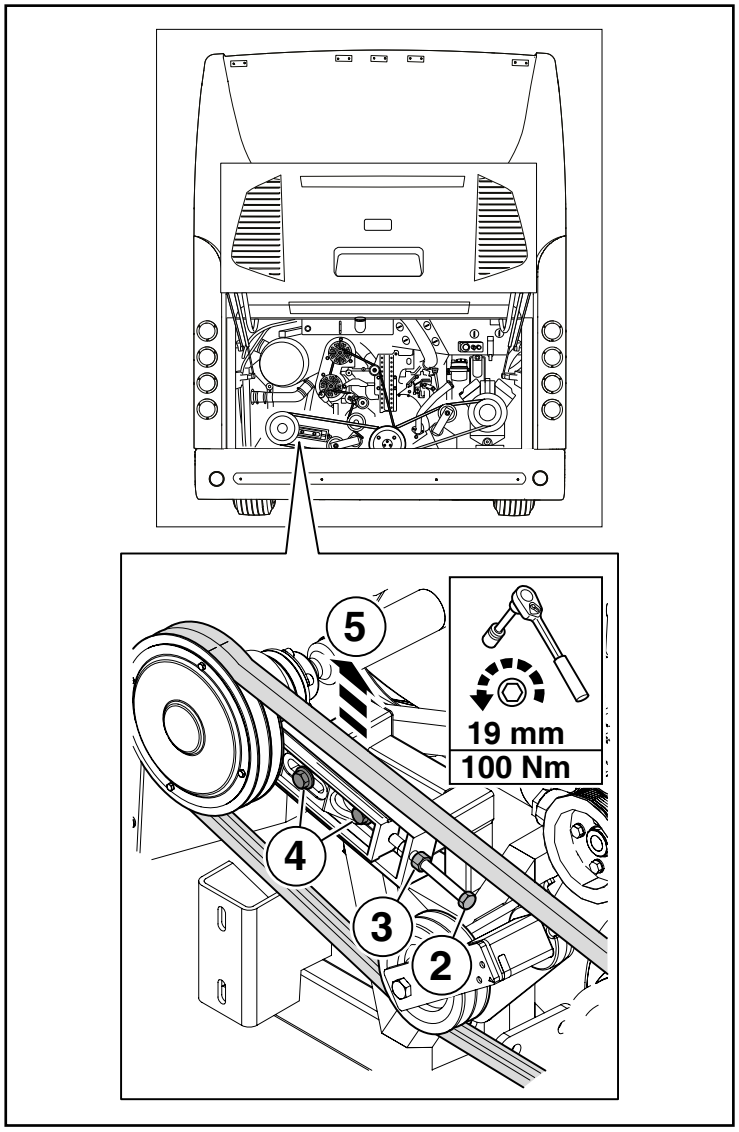

2.1.1 REMOVING THE V-BELT

2. Loosen the nut with (tool size19 mm).
3. Loosen the tension bolt (tool size19 mm).
4. Loosen the bolts on the tensioning bracket (tool size19 mm).
5. Remove fan drive belt.

WARNING

- Stop the engine!
- Use utmost care to prevent the vehicle from making a sudden start.

2.1.2 INSTALLATION OF THE V-BELT

1. Before Installing the fan drives v-belt, inspect the pulleys for damage, rust and grease deposits. If necessary, clean them thoroughly.

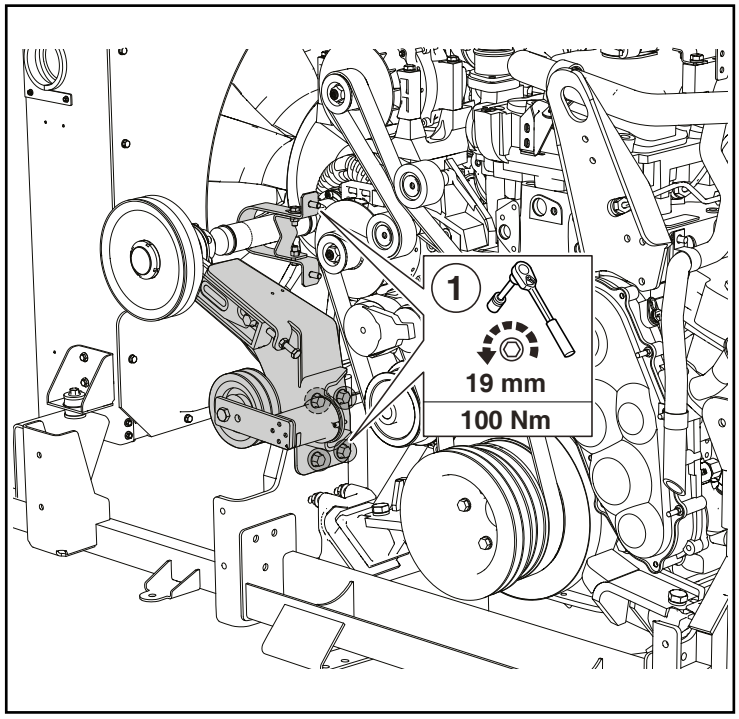

2.1.3 REMOVING THE FAN DRIVE RADIATOR

1. Remove fan drive pulley and fan drive bracket connection bolts.

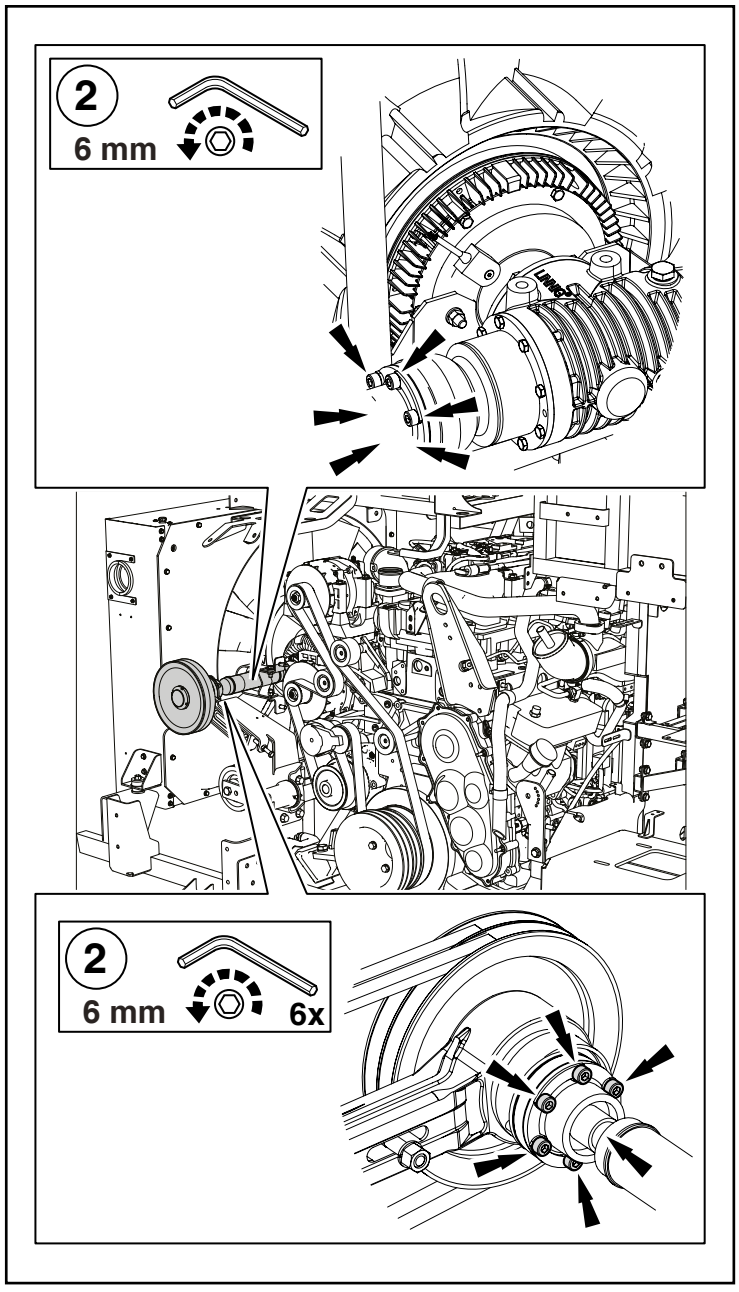

2. Remove fan drive shaft connection allen bolts.

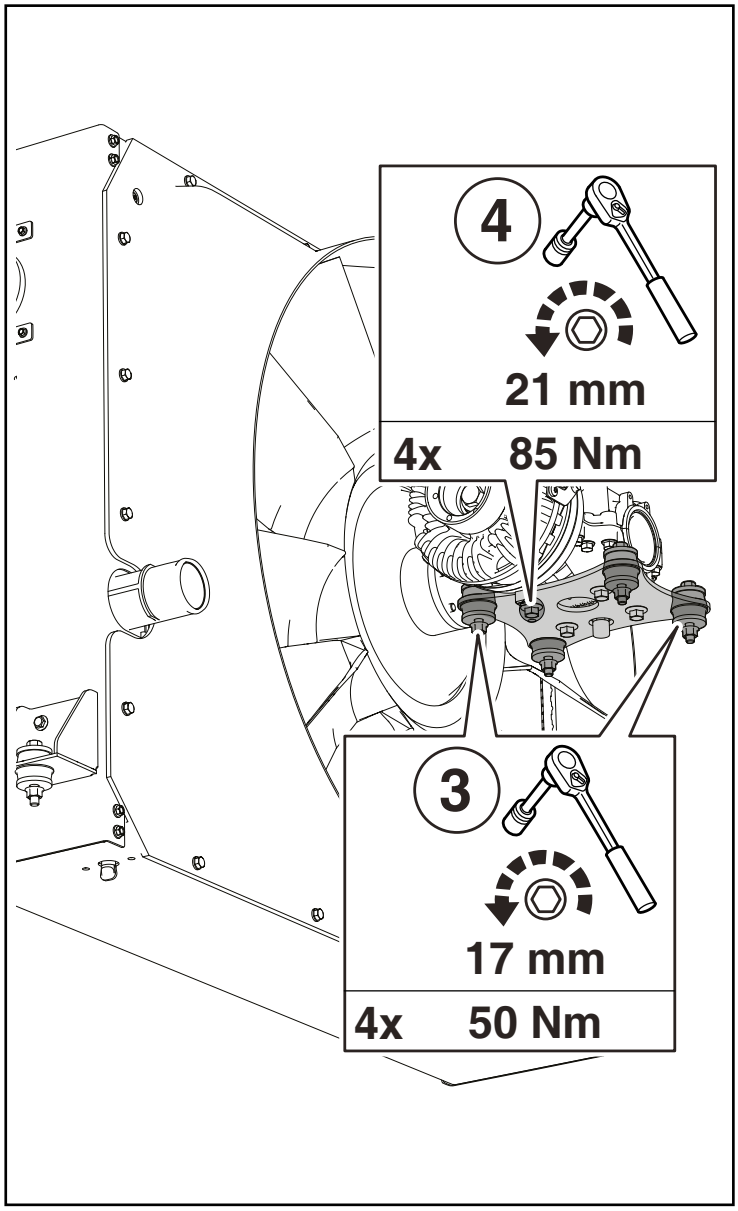

2.1.3 REMOVING THE FAN DRIVE RADIATOR

3. Unscrew 4 bolts (tool size 17 mm).
4. Unscrew 4 screws (tolol size 21 mm) and remove fan from speed mag. clutch lining and radiator spider support.

2.2. EXPLODED VIEW OF THE FAN DRIVE

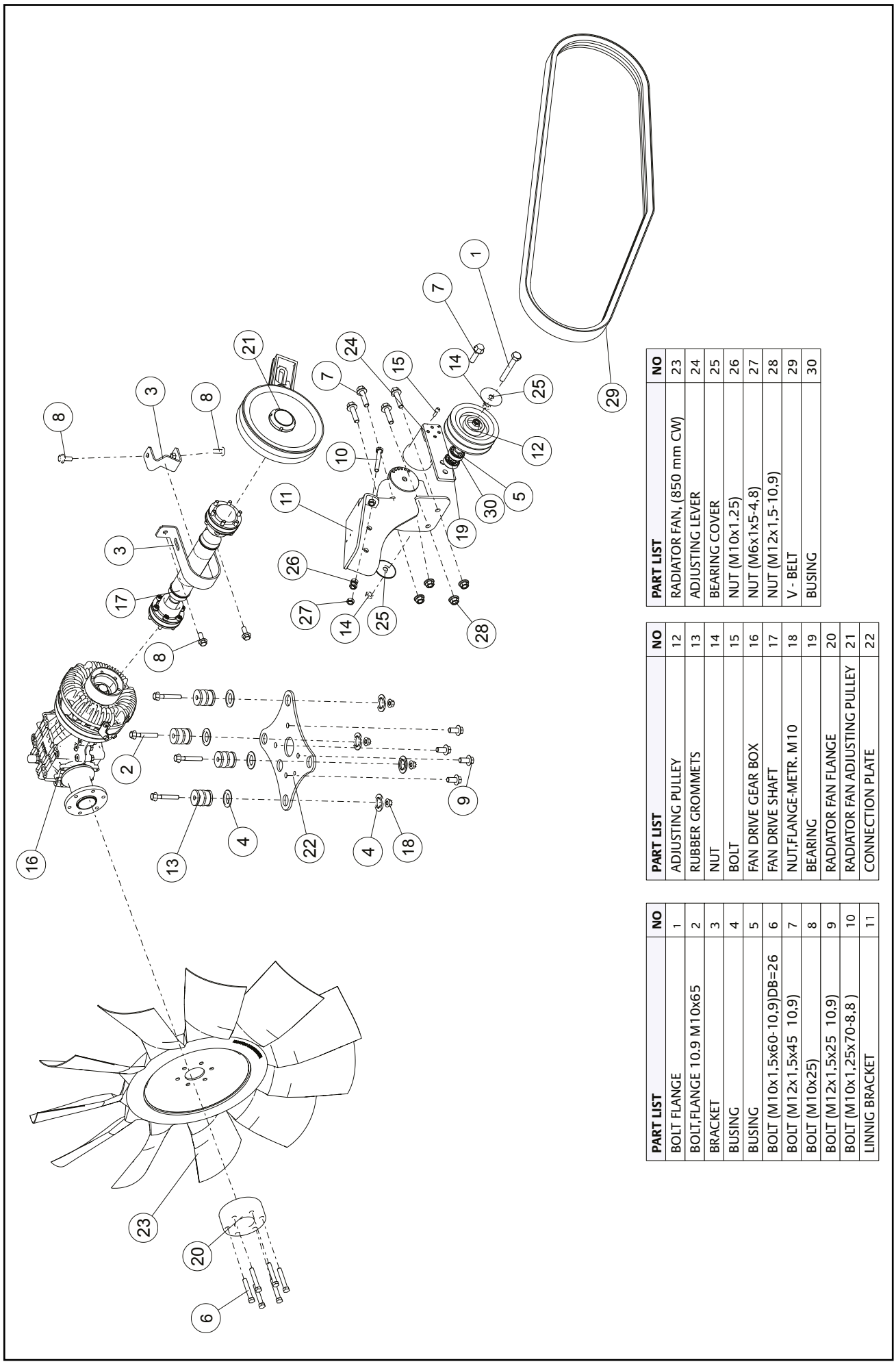

NO	PART LIST
1	BOLT FLANGE
2	BOLT,FLANGE 10,9 M10x65
3	BRACKET
4	BUSING
5	BUSING
6	BOLT (M10x1,5x60-10,9)DB=26
7	BOLT (M12x1,5x45 10,9)
8	BOLT (M10x25)
9	BOLT (M12x1,5x25 10,9)
10	BOLT (M10x1,25x70-8,8)
11	LINNIG BRACKET

NO	PART LIST
12	ADJUSTING PULLEY
13	RUBBER GROMMETS
14	NUT
15	BOLT
16	FAN DRIVE GEAR BOX
17	FAN DRIVE SHAFT
18	NUT,FLANGE-METR. M10
19	BEARING
20	RADIATOR FAN FLANGE
21	RADIATOR FAN ADJUSTING PULLEY
22	CONNECTION PLATE

NO	PART LIST
23	RADIATOR FAN, (850 mm CW)
24	ADJUSTING LEVER
25	BEARING COVER
26	NUT (M10x1.25)
27	NUT (M6x1x5-4,8)
28	NUT (M12x1,5-10,9)
29	V - BELT
30	BUSING

05 TRANSMISSION

Rev.00 / 25.03.14

1. TOOLS 2

2. SERVICE PROCEDURE 3

2.1. Removing Transmission 3

2.2. Installation Of Transmission 7

2.3. Exploded View Of The Transmission 8

2.4. Removing The Transmission Oil Filter 9

2.5. Transmission Oil Level Check 10

3. TROUBLESHOOTING 11

GENERAL

- If work is performed by people who do not have the necessary training to carry out the work or if this information is handled carelessly or totally ignored, this may result in severe injury and/or death. Inaddition, serious damage to the vehicle may occur.
- Always read the safety instructions in full before starting certain operations. The safety instructions stipulate which aspects must be considered to achieve maximum safety. The information is given that is very important for health and safety.
- Always work in adequately ventilated rooms with sufficient lighting, free from dirt and clutter. Never leave tools or parts lying around, keep away from (high-) voltage sources that present a risk of short-circuiting. Always wear protective clothing. Do not wear any damaged or loose-fitting clothing and remove jewelry before starting the work. In case of long hair use hairnet.

1. TOOLS

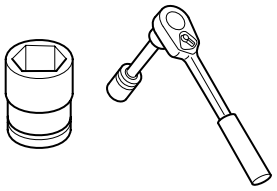 Impact Socket	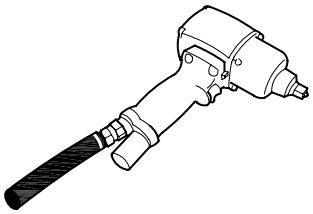 Impact Wrenches	 Double Ended Ring Spanner
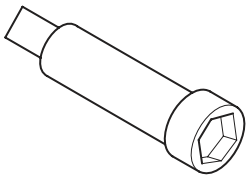 Short Arm	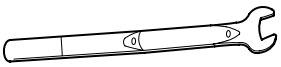 Torque Wrench	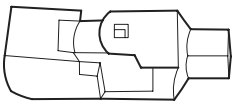 Universal Joint
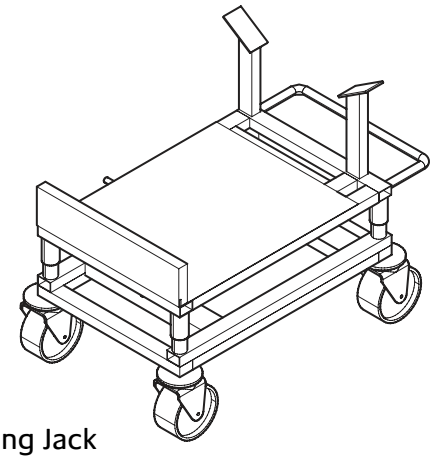 Transmission Carrying Jack		 Torque Wrench 200 Nm

2. SERVICE PROCEDURE

2.1. REMOVING TRANSMISSION

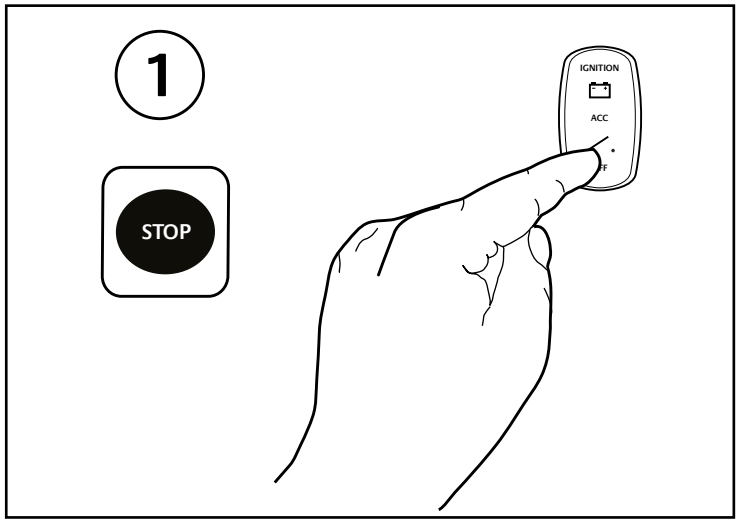

1. Stop the engine.

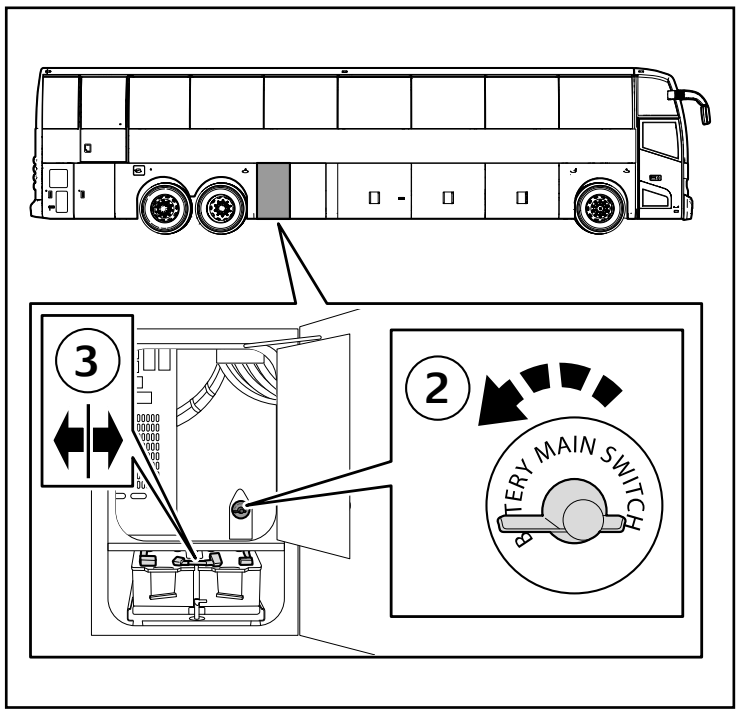

2. Turn off battery main switch.
3. Disconnect the negative battery cable.

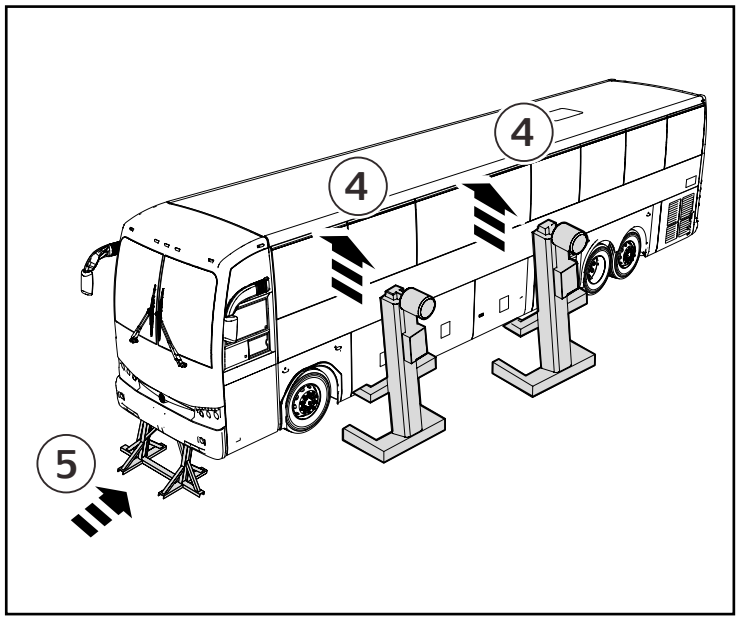

4. Lift up the vehicle with the lifting jack.
5. Support the frame by rigid rack after lifting bus.

WARNING

- Support the vehicle securely so the lift does not move.
- Do not remove the support until the entire operation is completed.
- Throughout the entire work procedure, keep the transmission in the neutral position.
- On vehicles with center parking brake, the parking brake has to be switched off, which means that the parking brake is no longer available.

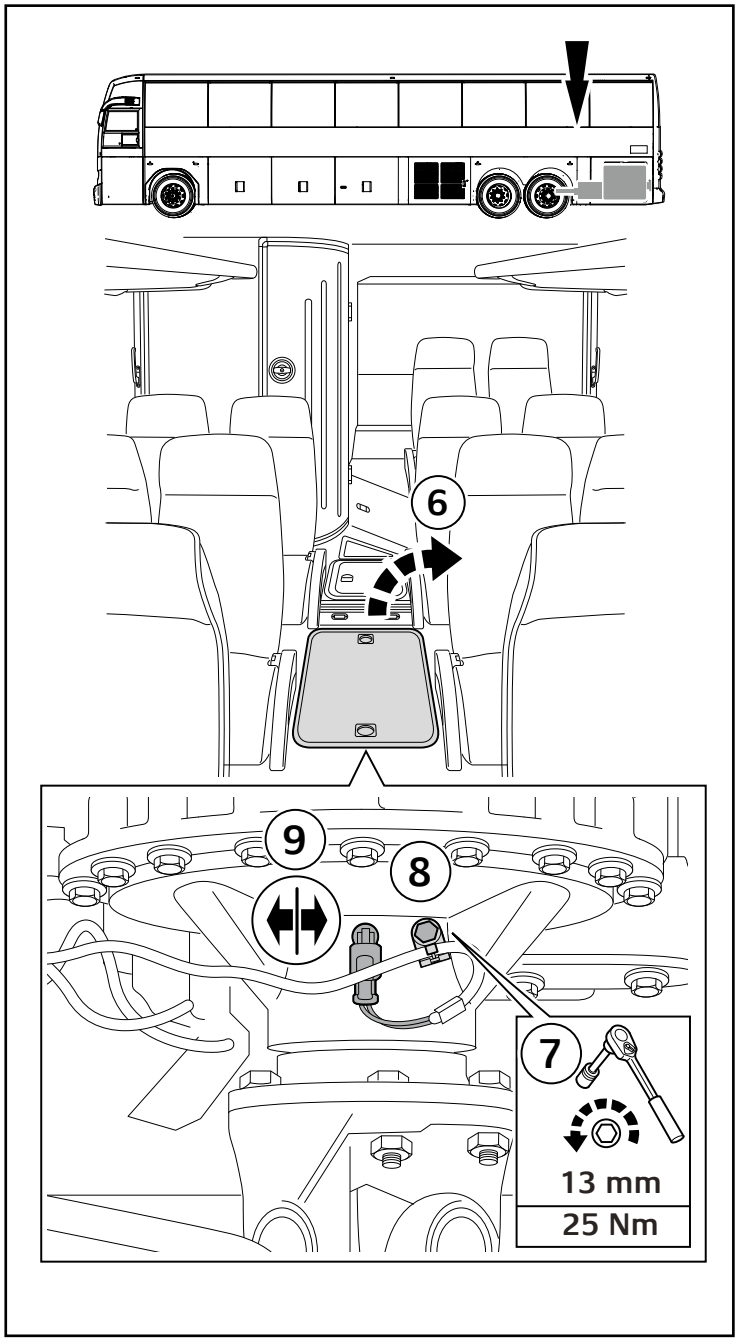

2.1. REMOVING TRANSMISSION

6. Remove the access hatch.
7. Remove the bolt.
8. Remove the bracket.
9. Disconnect the sensor.
10. Remove the ground connection cable.

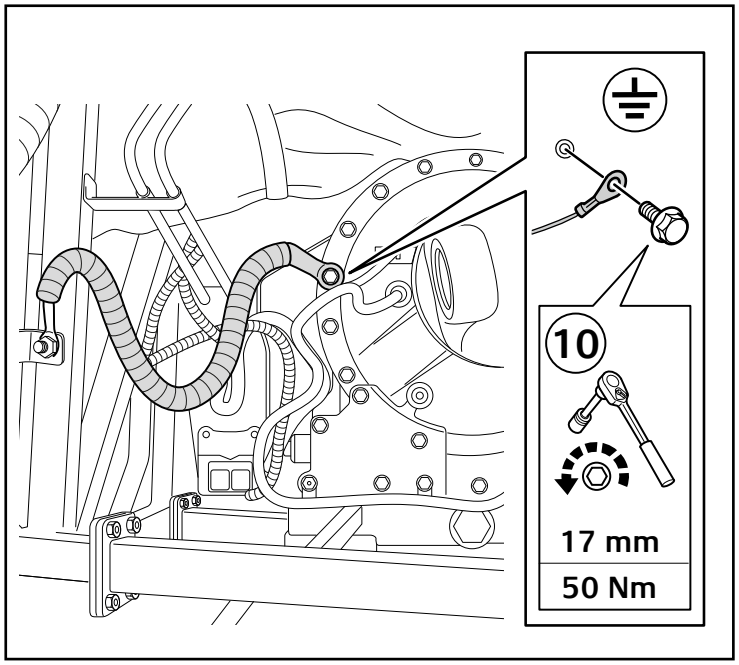

CAUTION

- Care must be taken not to splash hydraulic fluid on painted surfaces because it could damage the paintwork.
- Wipe off hydraulic fluid immediately when splashed on paintwork.

2.1. REMOVING TRANSMISSION

11. Place the transmission jack under transmission, and support the transmission.

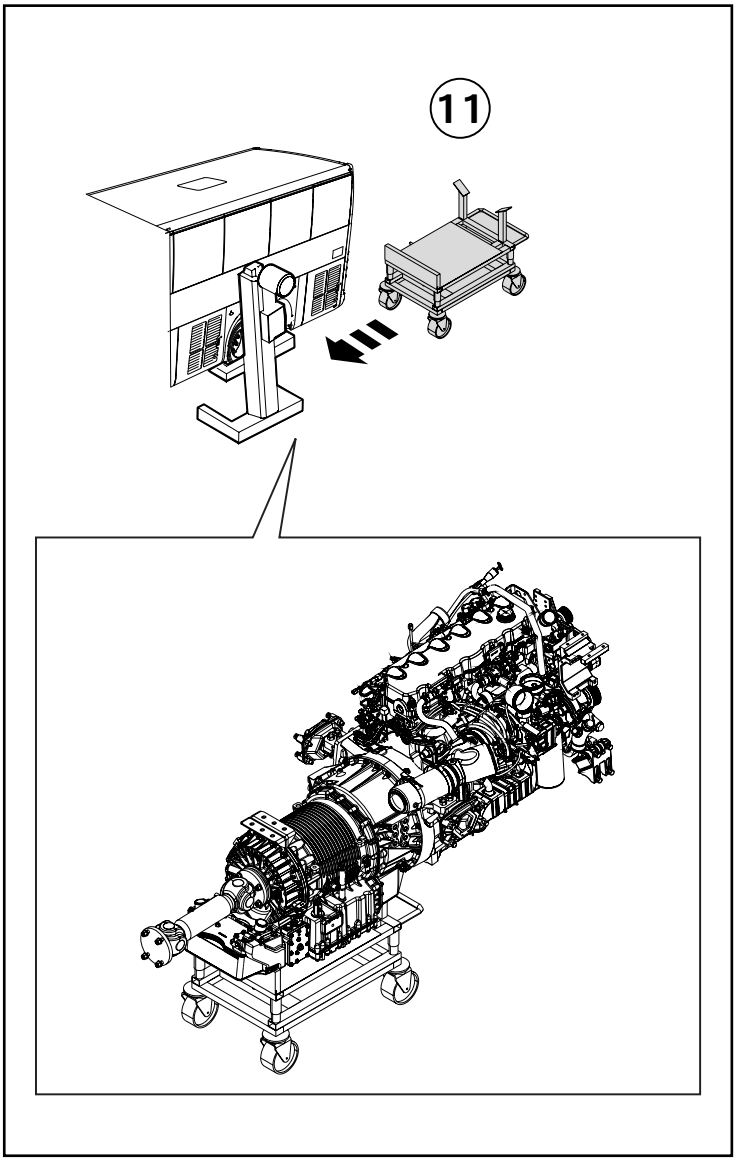

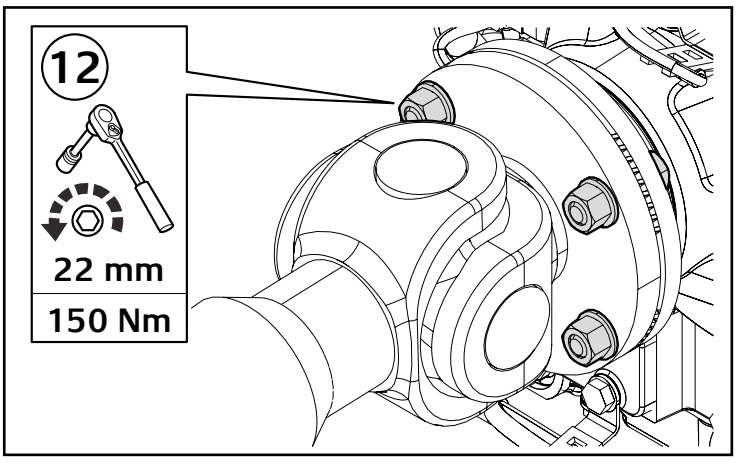

12. Remove the propeller shaft, transmission connection nuts, then remove the propeller shaft from the transmission.

WARNING

After removal the propeller shaft, tie the shaft to the frame with a rope.

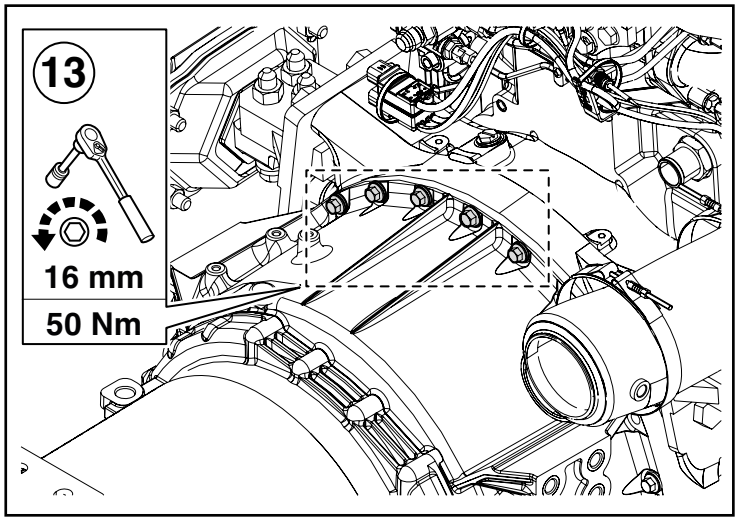

2.1. REMOVAL SEQUENCE OF TRANSMISSION

13. Remove the transmission by loosen 12 engine connection bolts. Then remove transmission, retarder assy. from the vehicle.

WARNING

Move the transmission (about 8 cm.) until pinion is completely removed from engine.

CAUTION

- Check all wiring, piping and other parts, are removed from transmission.
- When moving the transmission be careful not to hit body or other parts.

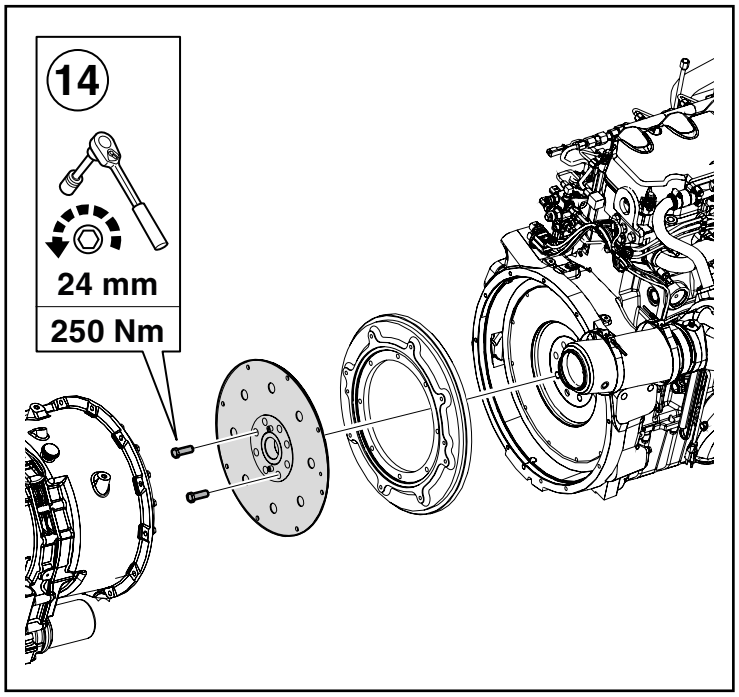

14. Removing 8 bolts from engine (tool size: 24 mm).



CAUTION

Make sure to apply only the necessary amount of grease, too much grease could drip, causing a slippery clutch.



CAUTION

Insert the drive pinion or input shaft into the pilot bearing of the flywheel take care not to damage the splines of the drive pinion or input shaft.

2.2. INSTALLATION OF TRANSMISSION

1. Rub grease on to the clutch disc sliding surface of drive pinion and input shaft with your hand.
2. Follow the removal sequence in reverse.
3. Apply oil to the pinion and coupling gear.
4. Install transmission to the engine.
5. Install drain plugs with new genuine copper seals. Tighten drain plug to 36,9 ftlbf and drain plug to 73,8 ftlbf.
6. If the transmission oil is drained, refill it with oil.
7. Measure the oil level, check transmission especially the cover of the oil pan – for leaks.
8. Check the oil hoses. Replace if cracked, pourous, chafed.

Removal Sequence:

14 - 15 - 12 - 11 - 10 - 9 > 13

4 - 5 - 6 - 3 - 7 - 8 > 2 > 1

16 - 17 > 18

Note:
Assembly Sequence is the reverse of the Removal Sequence

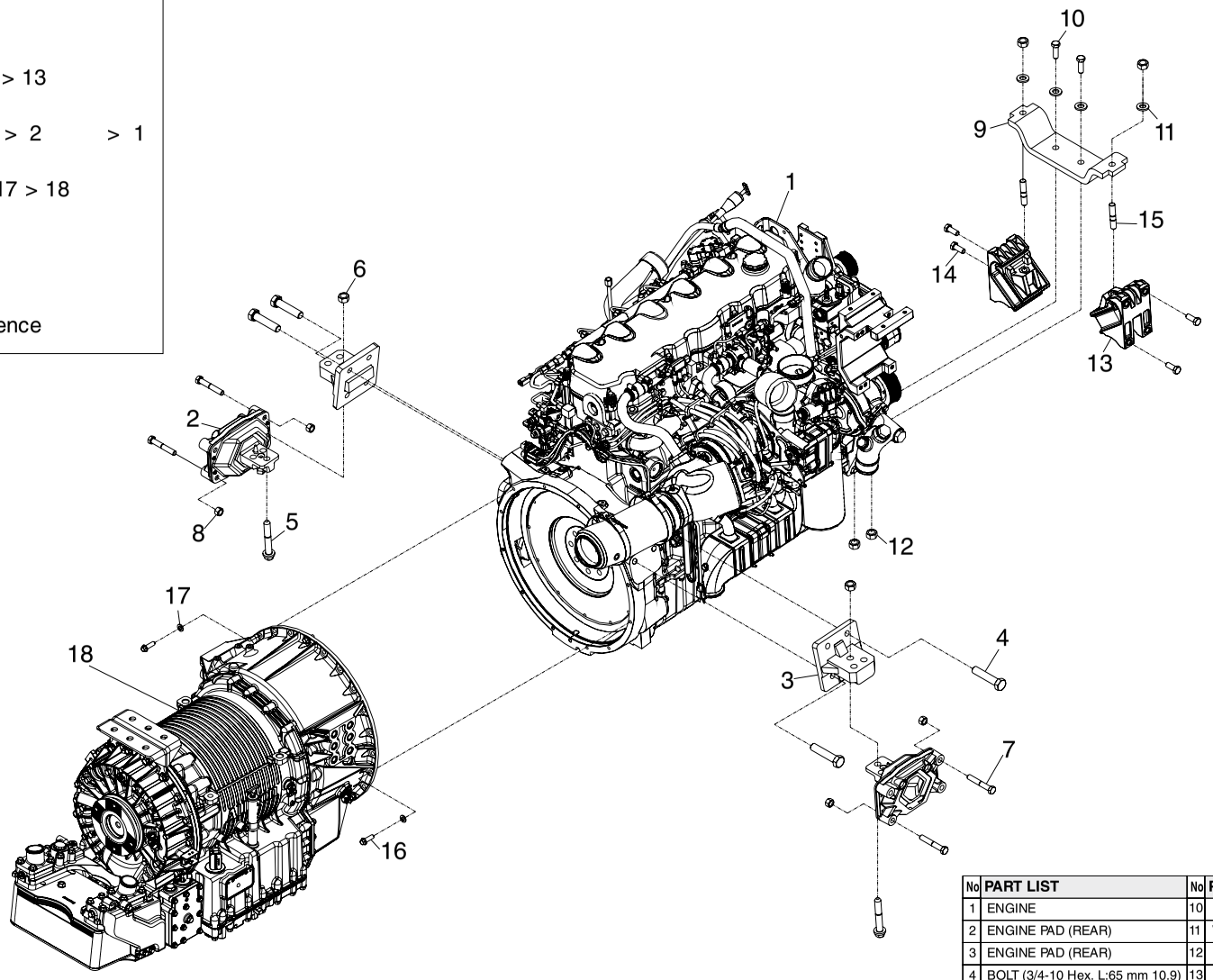

SYMBOL	TIGHTENING TORQUE
4(Bolt)	184,4 ftlbf
5(Bolt)	221 ftlbf
6(Nut)	221 ftlbf
7(Bolt)	147,5 ftlbf
8(Nut)	147,5 ftlbf
10(Bolt)	295 ftlbf
12(Nut)	295 ftlbf
14(Bolt)	147,5 ftlbf
16(Bolt)	221 ftlbf

No	PART LIST	No	PART LIST
1	ENGINE	10	BOLT (M18X1,5X65)
2	ENGINE PAD (REAR)	11	WASHER
3	ENGINE PAD (REAR)	12	NUT
4	BOLT (3/4-10 Hex. L:65 mm 10.9)	13	ENGINE PAD (FRONT)
5	BOLT (M18)	14	BOLT (M14X35)
6	NUT (M18)	15	THREADED PIN
7	BOLT (M14X1,5X90)	16	BOLT
8	NUT (M14X1,5)	17	WASHER SPRING
9	ENGINE PAD BRACKET	18	ALLISON TRANSMISSION

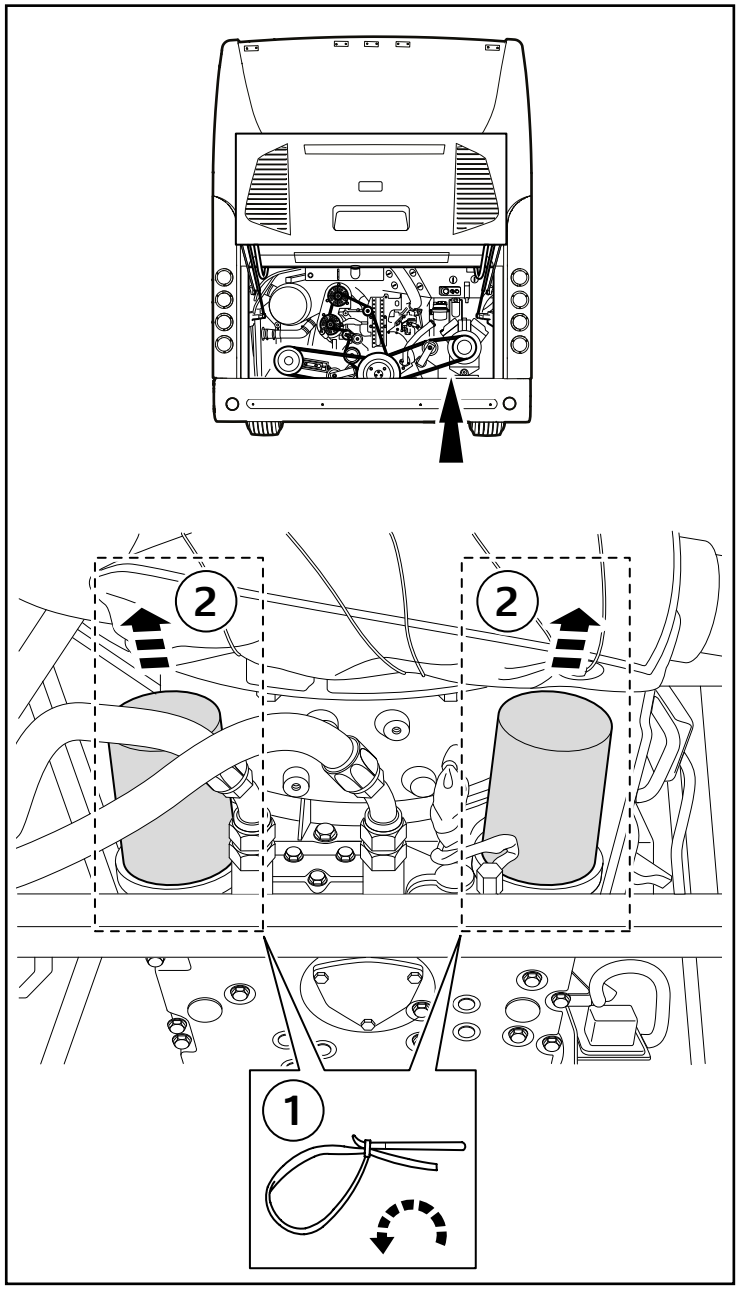

2.4. REMOVING THE TRANSMISSION OIL FILTER

1. Turn oil filter anticlockwise using strap wrench.

WARNING

- Beware of oil leakage!

2. Remove oil filter.

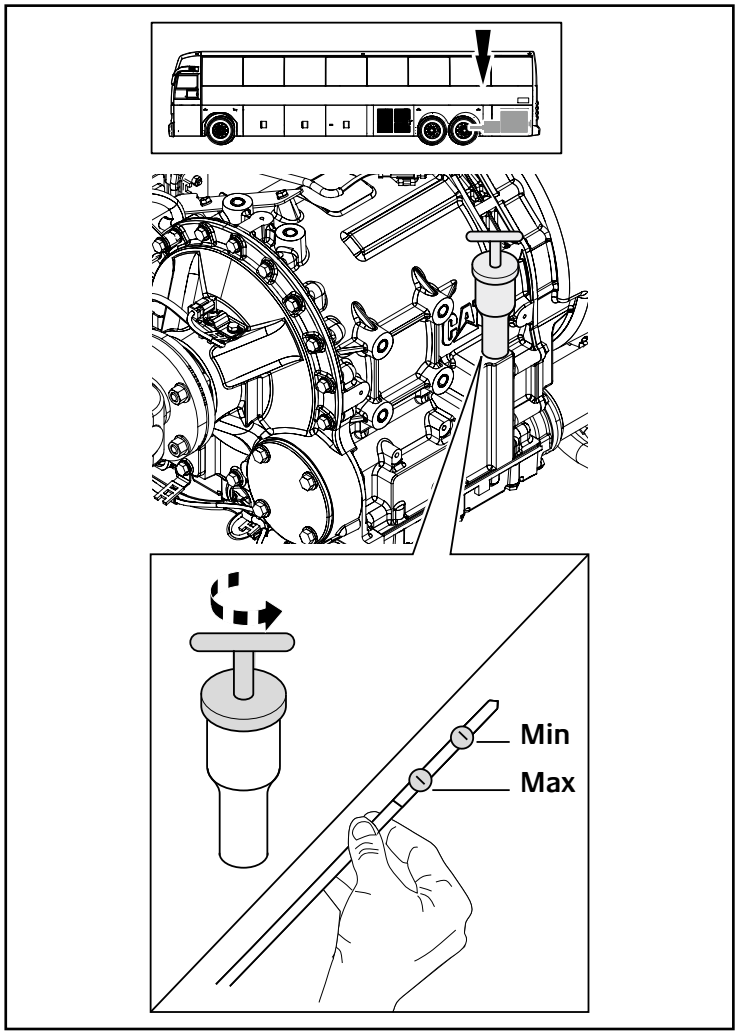

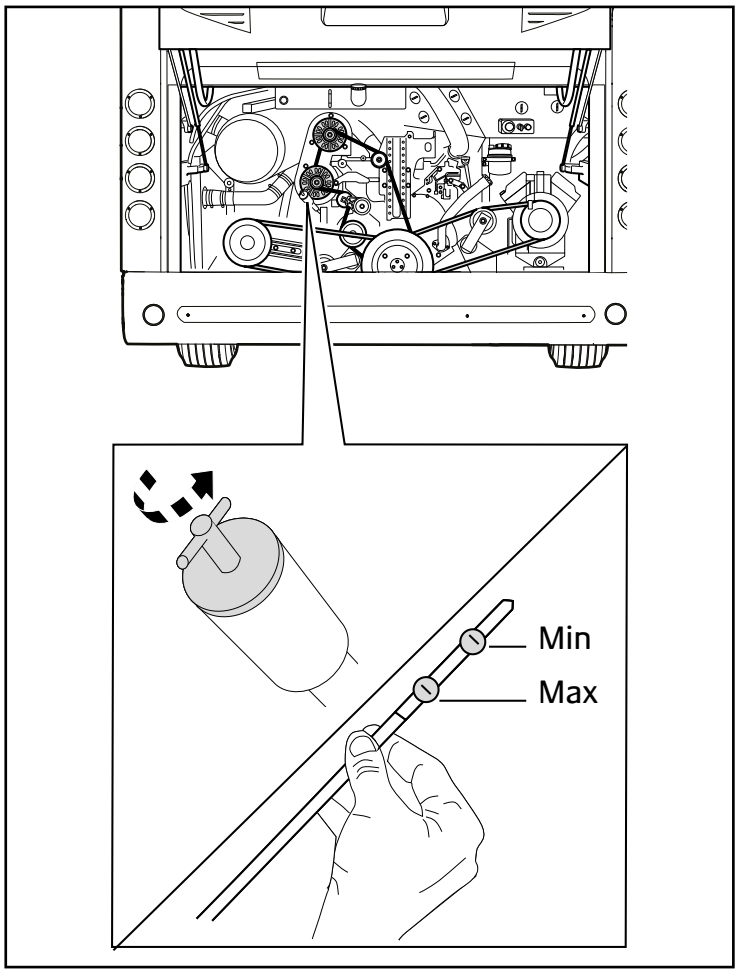

2.5. TRANSMISSION OIL LEVEL CHECK

Make sure the vehicle is on a flat, horizontal surface. Check the oil level by taking out the dip stick, cleaning it with a lint-free cloth, replacing it in the holder and then again taking it out of the holder and reading off the oil level. The oil level must always be between the two marks. If necessary, add oil through the filler opening.Always use oil of the same make and the same type. Be very careful not to add too much oil.

3. TROUBLESHOOTING

Noise when shifting	Noise while cruising	Noise when engine idles	Hard shifting into gear	Gear slip out of engagement	FAULT / CAUSE	
			X		Clutch disengaged improperly or Improper clutch pedal play	Faulty Clutch
			X		Defective power shift assembly, Air leak or Defective air compressor	Faulty Power Shift Operation
	X				Insufficient gear oil	Defective Transmission Proper
			X		Faulty shift rail sliding motion, Worn shift fork claws Worn shift fork piece or Bent shift fork	
				X	Fatigued or damaged shift rail poppet spring or Worn steel ball and groove of shift rail	
	X				Damaged gears	
X					Worn gear splines	
	X				Excessive back lash between main shaft and counter shaft gears	
	X				Worn or damaged main shaft and countershaft bearings	
		X			Damaged or worn needle bearing gears	
		X			Damaged or worn countershaft bearing	
		X			Excessive backlash between drive pinion and countershaft constant-mesh gear or between input gear and splitter gear	
		X			Damaged or worn drive pinion or input shaft bearing	
	X	X			Damaged or worn main shaft pilot bearing	
			X	X	Worn main shaft thrust washer or loose main shaft rear lock nut	
			X	X	Worn or damaged main shaft bearing	
X			X		Worn taper surfaces of synchronized ring and gear taper cone	Faulty Synchronizer
				X	Worn synchronizer ring and synchronizer sleeve splines	
X					Worn shifting key	
X					Sagging or damaged shifting key spring	
X	X				Worn or damaged synchronizer sleeve	

06 FRONT AXLE

Rev.00 / 25.03.14

1. TOOLS **2**

2. SPECIFICATION **3**

3. STRUCTURE AND OPERATION **3**

4. ON VEHICLE ADJUSTMENT AND INSPECTION **4**

4.1. Alignment 4

4.2. Measurement Toe-In Using The Following Procedure 5

4.3. Measurement Of Chamber Angle 7

4.4. Adjustment Of Steering Angle 10

5. SERVICE PROCEDURE **12**

5.1. Removing The Front Axle 12

5.2. Exploded View Of The Front Axle 17

5.3. Exploded View Of The Stabilizer Rod 18

6. TROUBLESHOOTING **19**

GENERAL

- If work is performed by people who do not have the necessary training to carry out the work or if this information is handled carelessly or totally ignored, this may result in severe injury and/or death. Inaddition, serious damage to the vehicle may occur.
- Always read the safety instructions in full before starting certain operations. The safety instructions stipulate which aspects must be considered to achieve maximum safety. The information is given that is very important for health and safety.
- Always work in adequately ventilated rooms with sufficient lighting, free from dirt and clutter. Never leave tools or parts lying around, keep away from (high-) voltage sources that present a risk of short-circuiting. Always wear protective clothing. Do not wear any damaged or loose-fitting clothing and remove jewelry before starting the work. In case of long hair use hairnet.

1. TOOLS

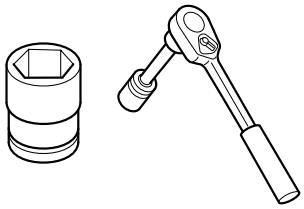

Impact Socket

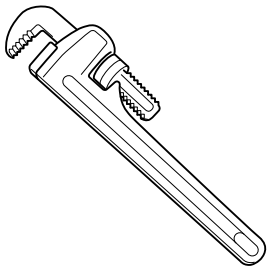

Pipe Wrench

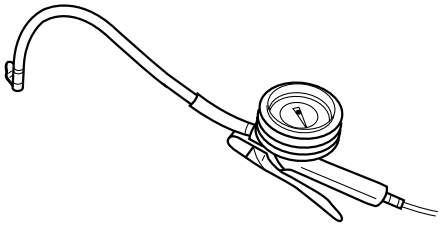

Tire Pressure Equipment

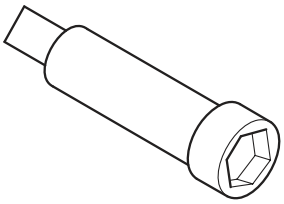

Short Arm

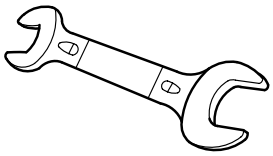

Open Wrench Double Ended



Torque Wrench 200 Nm

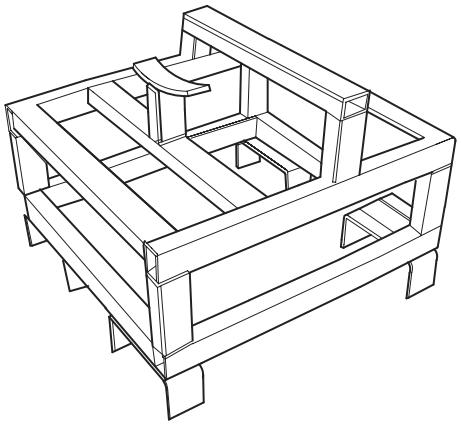

Front Axle Carrying Jack

2. SPECIFICATION

FRONT AXLE	
Producer	ZF
Model	RL 75 E
Type	Independent Front Suspension
Vehicle width in	102
Axle load max. lb	15653
Wheel travel in	± 3.9
Wheel cut (back-/lock/front/lock)	max. 60°/46°
Tire size (standard)	315/80 R 22.5
Wheel size (standard)	22.5" x 8.25"
Brakes	Disc
Axle system weight lb	1206 **

** Total axle system weight including tier-rods, air springs and shock absorbers

3. STRUCTURE AND OPERATION

The front axle transmits the weight of the front portion of vehicle to tires and also serves as part of the steering system. The front axle also has a proper wheel alignment for stabilizing the vehicle as it is driven.

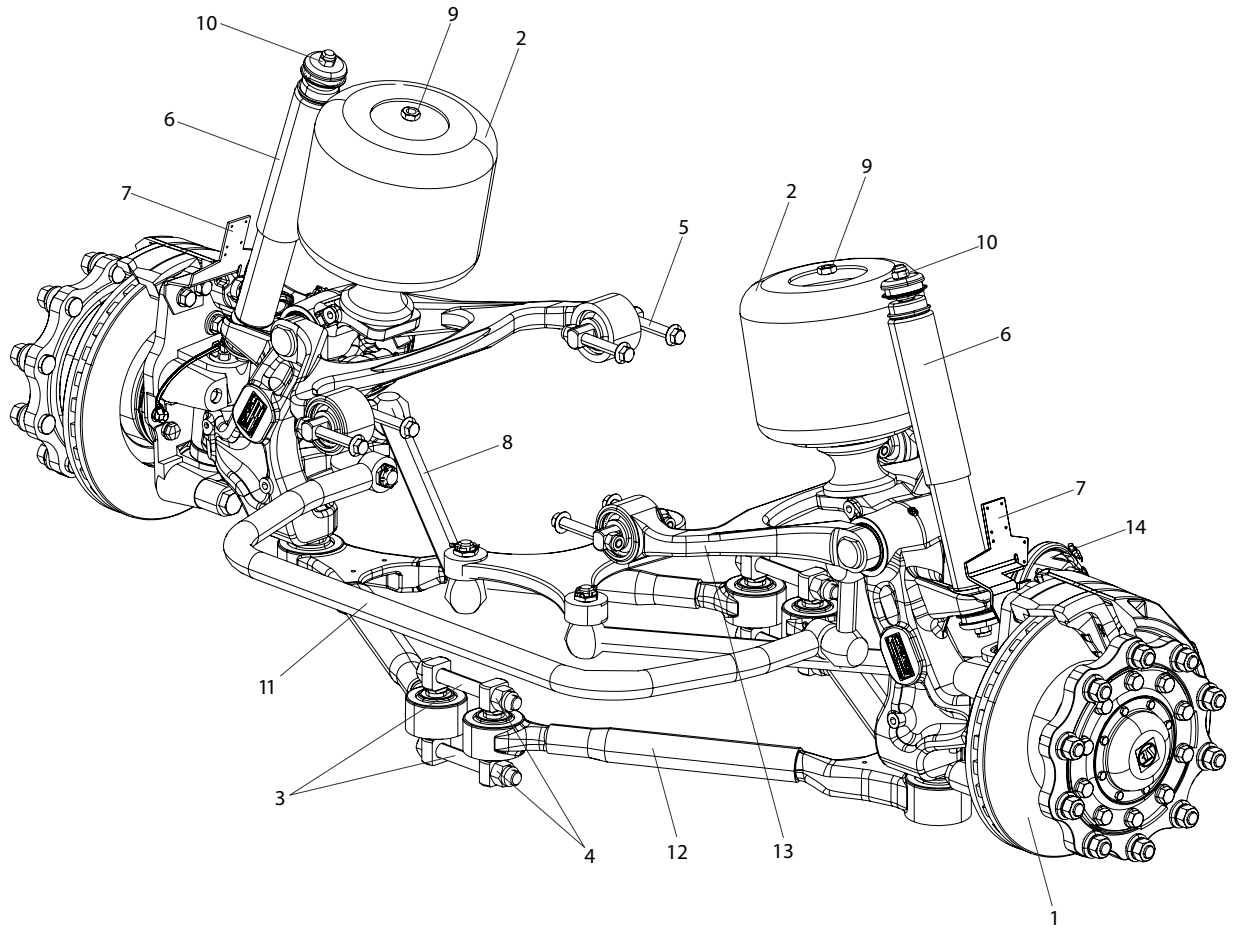

No	PART LIST	No	PART LIST	No	PART LIST
1	FRONT AXLE	6	SHOCK ABSORBER	11	STABILIZER ROD
2	AIR BELLOW	7	BRACKET (FRONT AXLE)	12	LOWER ARM (CONTROL ARM)
3	BOLT (M24x1,5x200-10,9)	8	TIE ROD	13	UPPER ARM (CONTROL ARM)
4	HEXAGONAL NUT (M24x1,5-10,9)	9	NUT (M18x1,5-8,8)	14	BRAKE CHAMBER
5	BOLT (M18x1,5)	10	NUT (SHOCKABSORBER CONNECTION)		

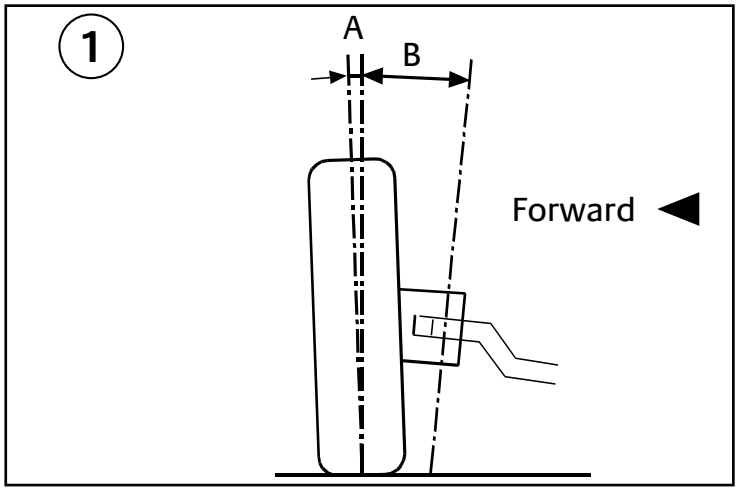

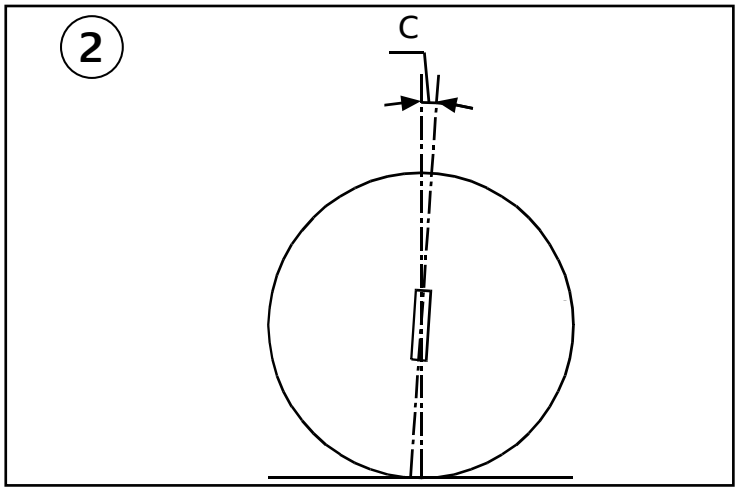

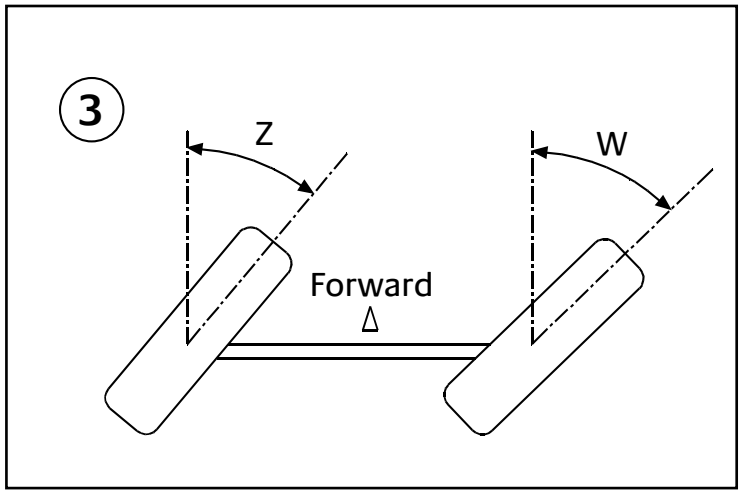

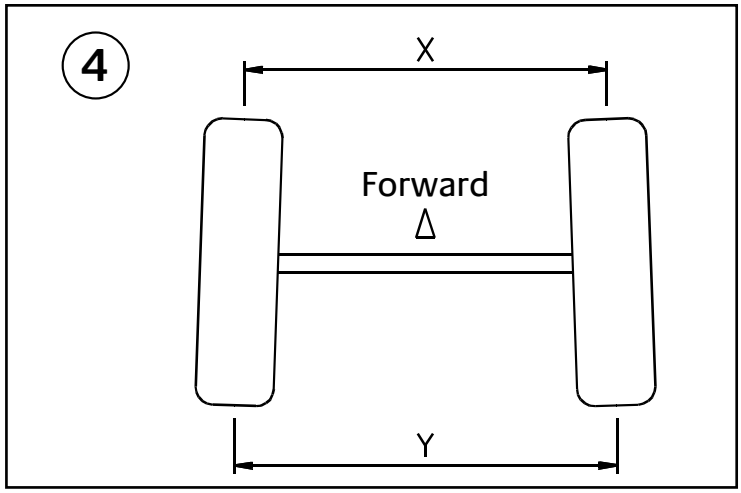

4. ON VEHICLE ADJUSTMENT AND INSPECTION

4.1. ALIGNMENT

1. A = Chamber angle = 0° 30’~ 1°
   B = Kingpin angle = 7° ± 15’

2. C = Kingpin angle = 3° ± 30’

3. Z = Turning angle (inner) 54°
   W = Tuning angle (outer) 48°

4. Toe-in = Y-X = 0.04 in

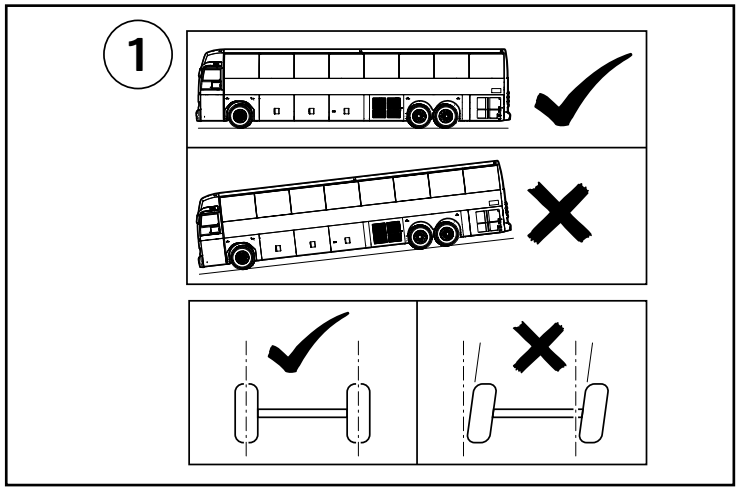

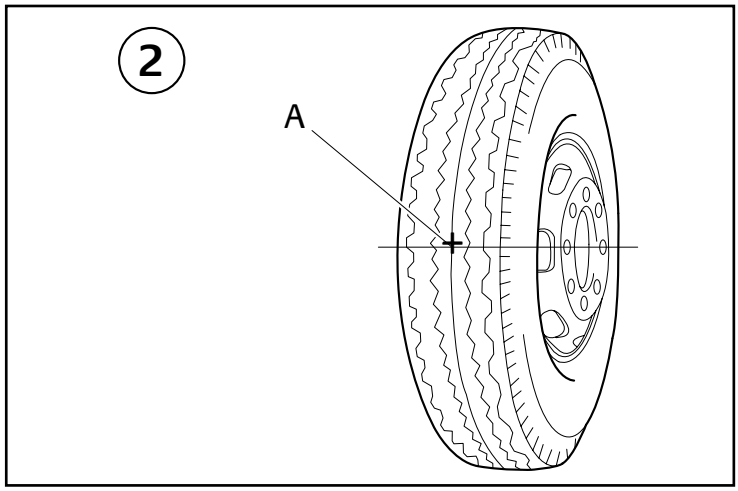

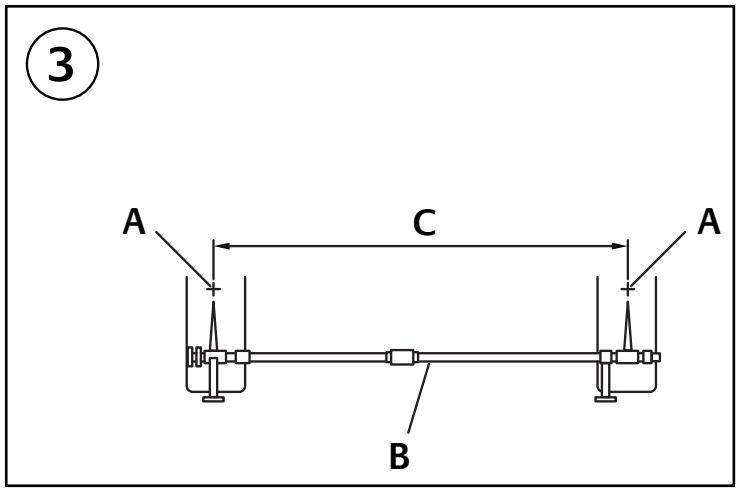

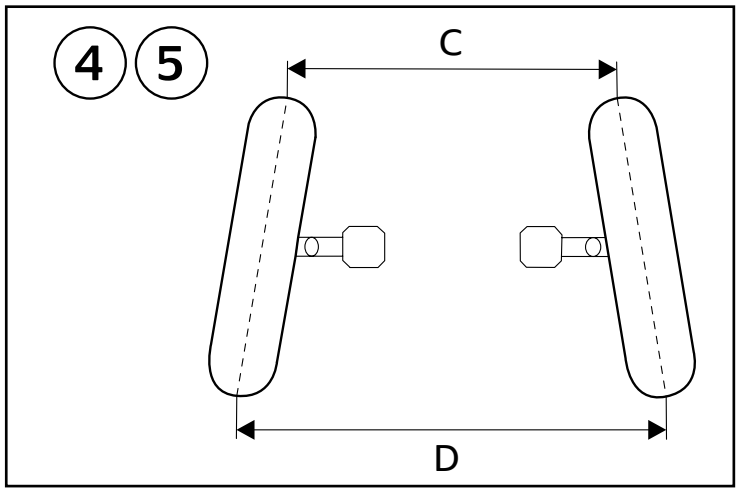

4.2. MEASUREMENT TOE-IN USING THE FOLLOWING PROCEDURE

WARNING

Always perform the following procedure on a flat surface. Check tire pressure.

1. Place the front wheels exactly in the straight ahead position.
2. Make a mark A on the front side of each front tire at the height of the front axle and at the center position of the tire width.
3. Adjust the ends of toe-in gauge B to marks A made on the front side of the right and left front tires, and measure distance C between the marks.
4. Using the same methode turn the tires 180° and measure distance D between marks on the rear side of the tires with the tires in contact with the ground surface.
5. Check to ensure that the difference between C and D is within the standard value range (D - C = 1 mm / 0.039 in).

WARNING

If the wheels have turned more than 180° (1/2 turn) you should repeat the above procedure again from the beginning. Never rotate the wheel backward.

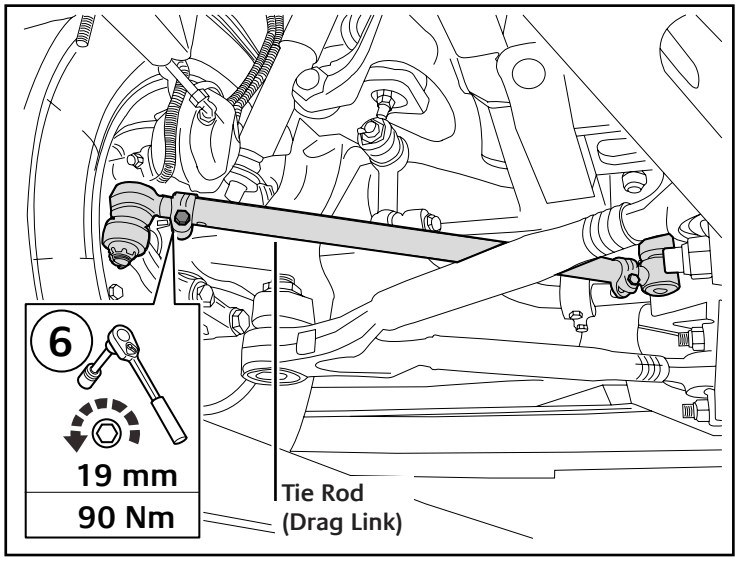

4.2. MEASUREMENT TOE-IN USING THE FOLLOWING PROCEDURE

6. If the value of difference exceeds the value given by the manufacturer, place the tires in the straight ahead direction and fully loosen castle nut (tool size 19 mm) on the steering arm.

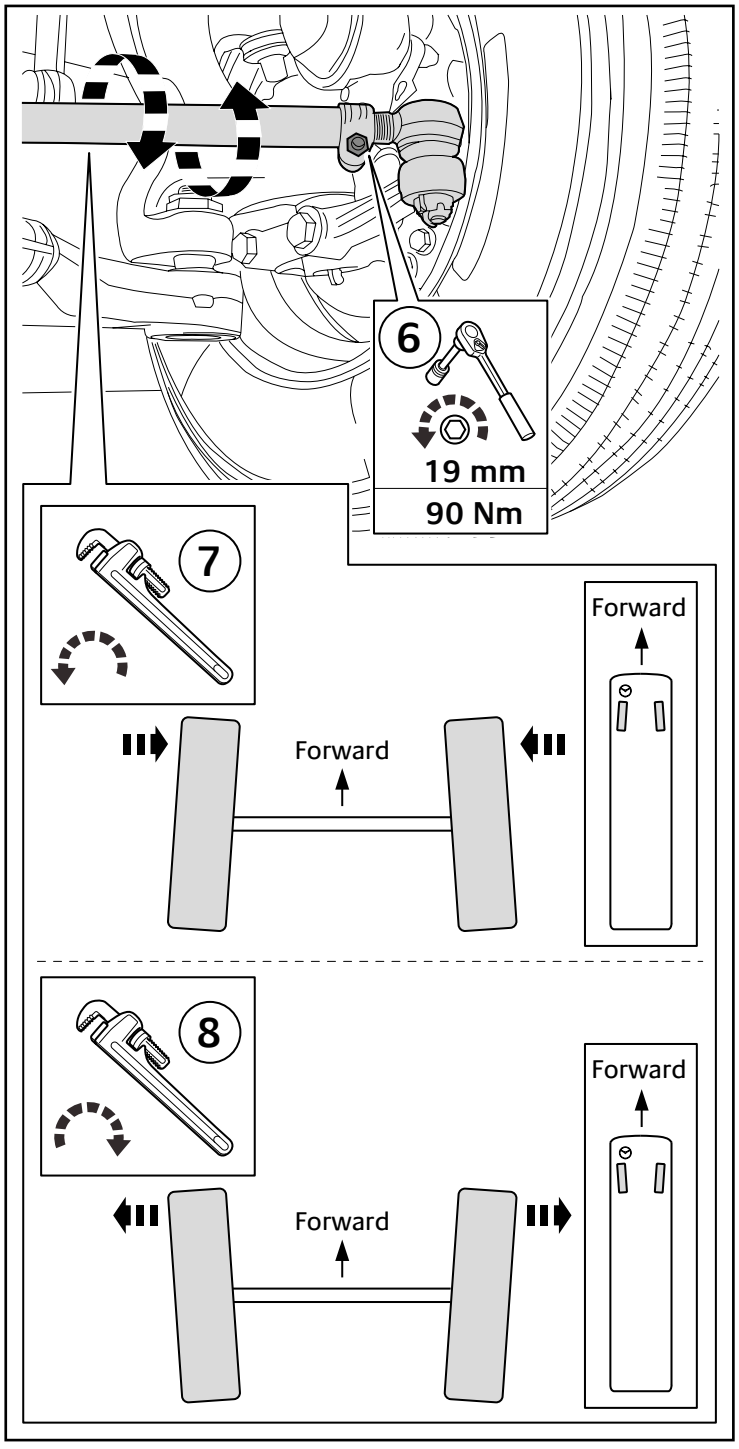

7. Manually turn the tie rod clockwise for toe-in to fall within the standard value range.
8. Manually turn the tie rod anti-clockwise for toe-out to fall within the standard value range.

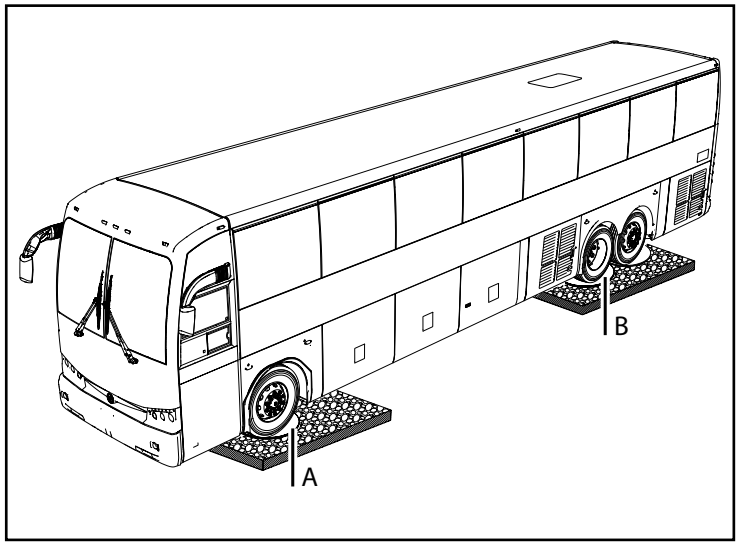

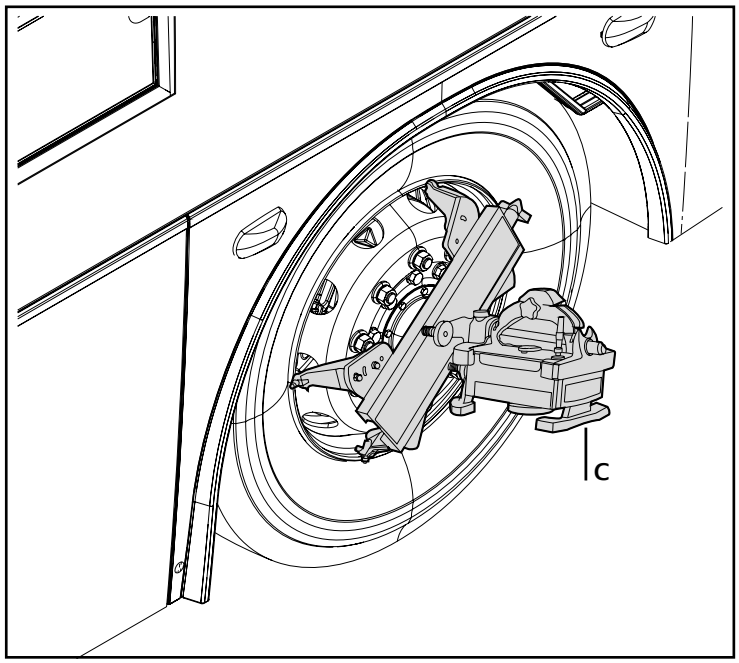

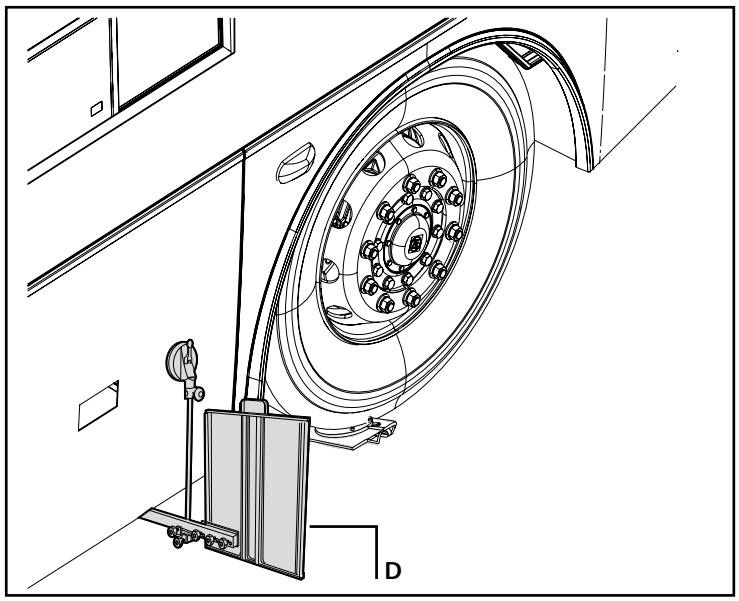

4.3. MEASUREMENT OF CHAMBER ANGLE

Prepare platform B having the same height as turning radius gauge A and place the platform under the rear wheels so that the vehicle will remain horizontal.

1. Keep turning radius gauges A locked and Jack up the vehicle and adjust the centers of the ground contact areas of the right and left front tires to the centers of the turntables of right and left turning radius gauges A.
2. Place the front wheels exactly in the straight ahead position.
3. Connect the wheel part (C) of the computer.
4. Put the rubber suction cup (D) on four sides of the vehicle.
5. Turn on the computer.
6. Depress the brake pedal to apply brakes to the front wheels. In this condition, slowly turn the steering wheel from 0 on the scale of turning radius gauge A until the right front wheel changes its direction 20 to the right, and the left front wheel changes its direction 20 to the left.
7. Read the Camber angle.

WARNING

- After jacking up the vehicle, apply chocks to make sure that the vehicle does not move.
- Don't remove chocks until the entire operation is completed.

CAUTION

If brakes are not applied to the front tires, the tires might slightly rotate, making it impossible to obtain correct readings.

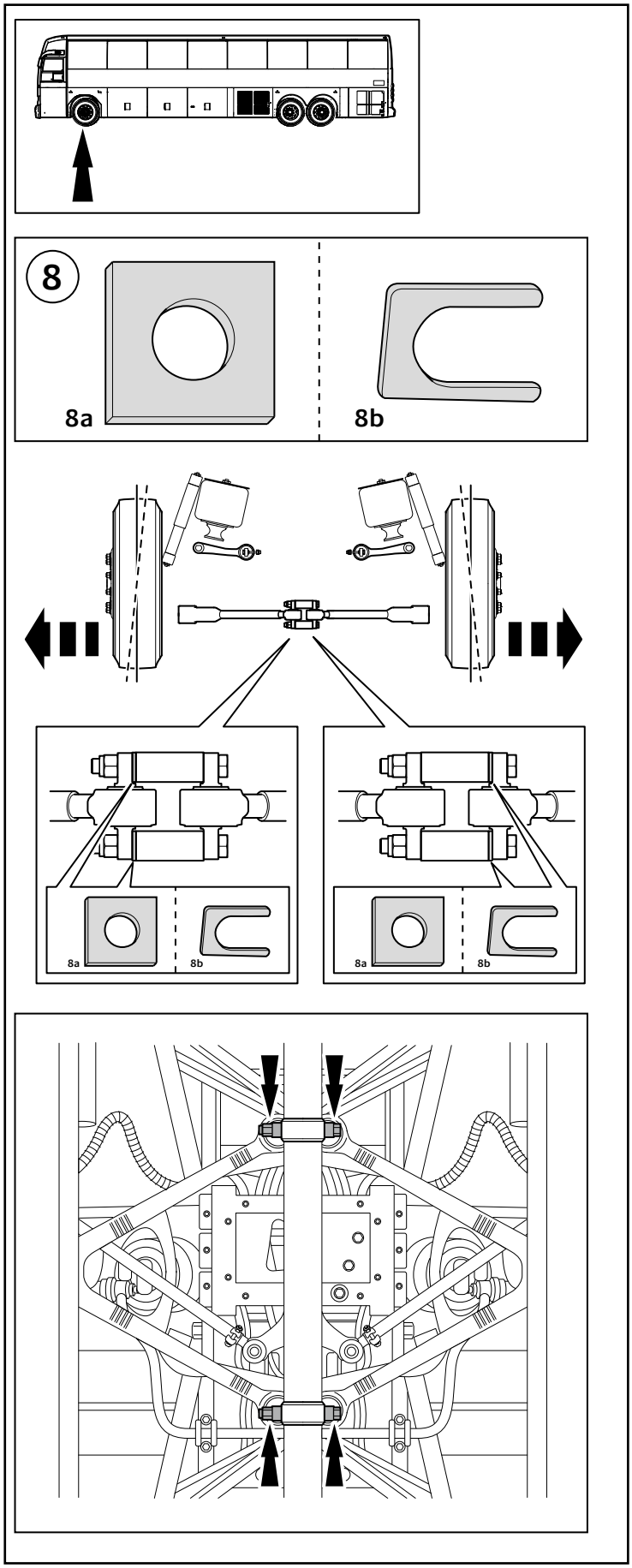

4.3. MEASUREMENT OF CHAMBER ANGLE

8. If Camber angle is not within specification change using a shim (8a, 8b) the more frequently used shim is 8b.
   If the camber angle value is high put shim on front axle lower arm.

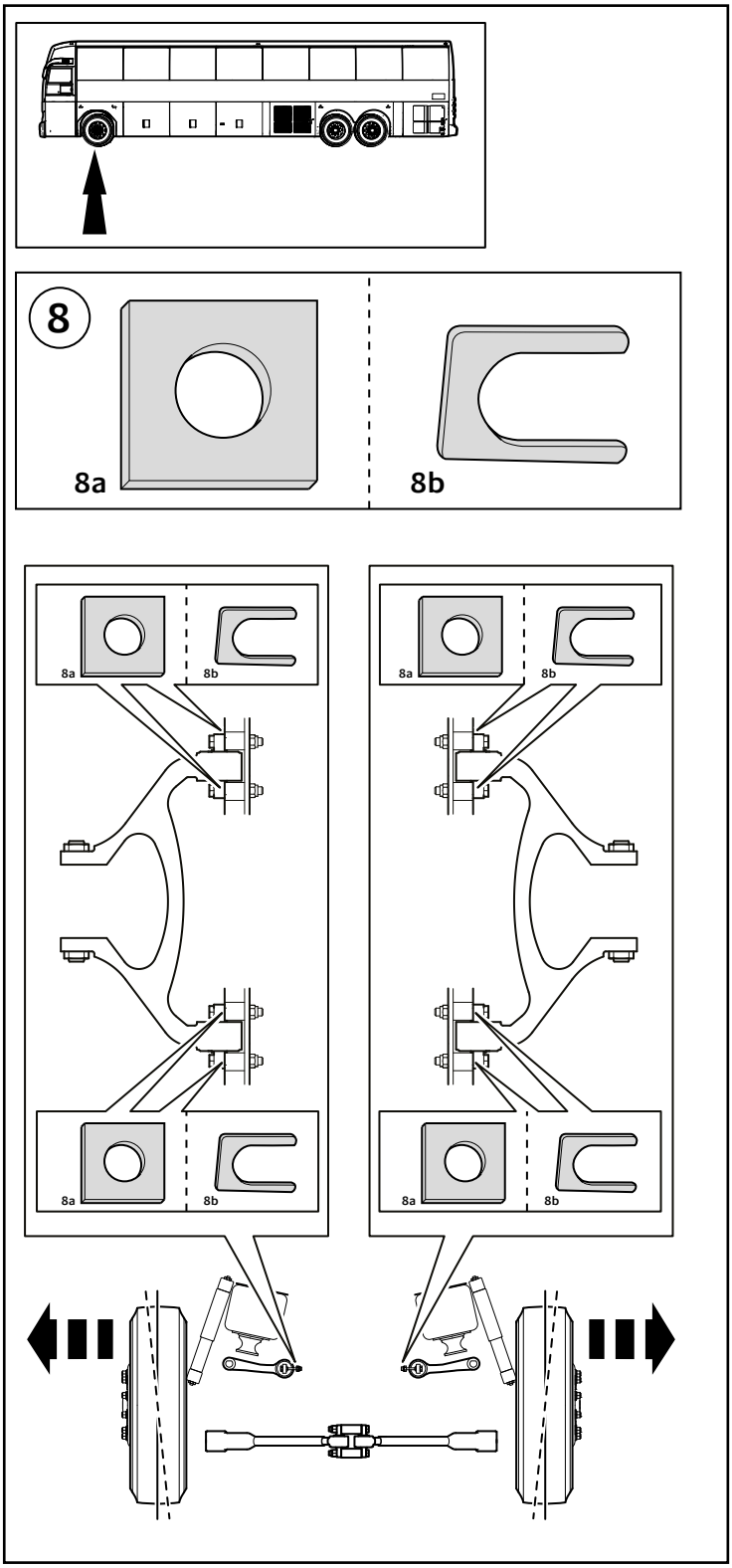

4.3. MEASUREMENT OF CHAMBER ANGLE

8. If Camber angle is not within specification change using a shim (8a, 8b) the more frequently used shim is 8b.
   If the camber angle value is low put shim front axle upper arm.

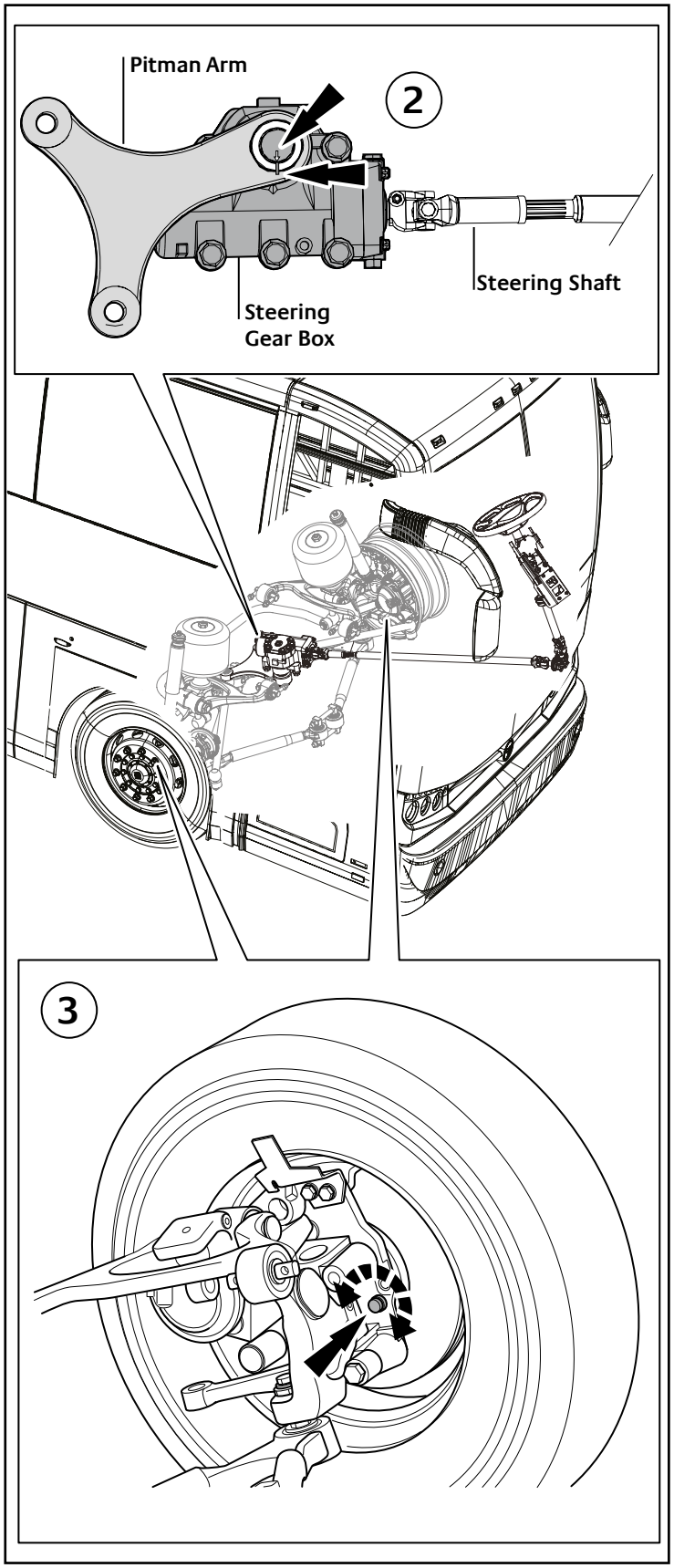

4.4. ADJUSTMENT OF STEERING ANGLE

Note:
Be sure that wheel alignment is completely adjusted before adjusting the steering angle.

1. Set the turning radius gauges and platform for the vehicle by the same procedures as for measurement of the camber angle.
2. Set the arrow on the steering gear box to the same position with the mark on the pitman arm.
3. The tires must be straight position for adjusting, if not adjust wheel to the scale by loosening nut. Turn the steering wheel fully clockwise or counter-clockwise to adjust the left hand and right hand turning angle.After setting the steering angle of the inner wheel to 54° the mechanical stopper on the front axle is set. This way the hydraulic limiter which is inside the steering gear box is also set.

CAUTION
Be sure that the stopper does not touch the knuckle, when the By-pass valve on the steering gear box opens.

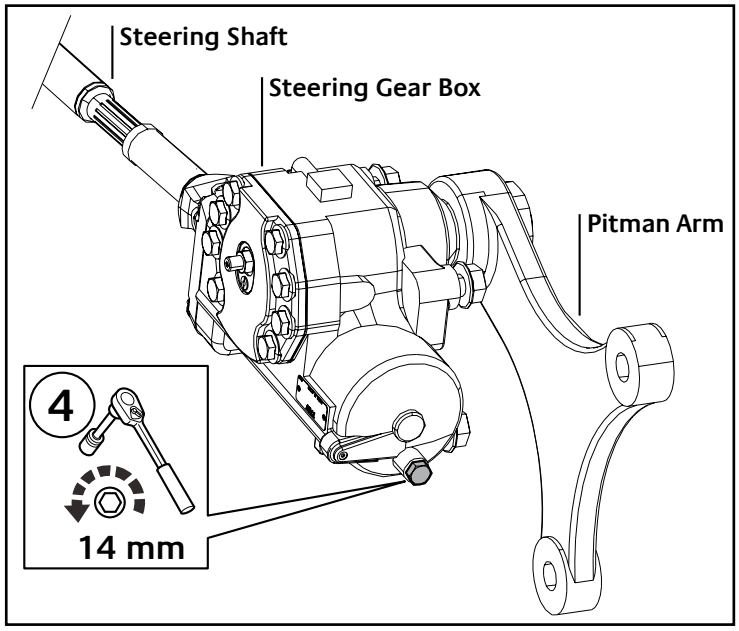

4.4. ADJUSTMENT OF STEERING ANGLE

4. Manually tighten or loosen the bolt under and upper the steering pump to adjust right and left hand turning angle. For turning left tighten or loosen lower bolt, for turning right tighten or loosen upper bolt. The By-pass valve on the steering gear box must be open, when the wheels reach the specified turning angle value.

Note:
Upper bolt of the steering pump is the same direction with the lower bolt of the steering pump.

CAUTION
Be sure that the stopper does not touch the knuckle, when the By-pass valve on the steering gear box opens.

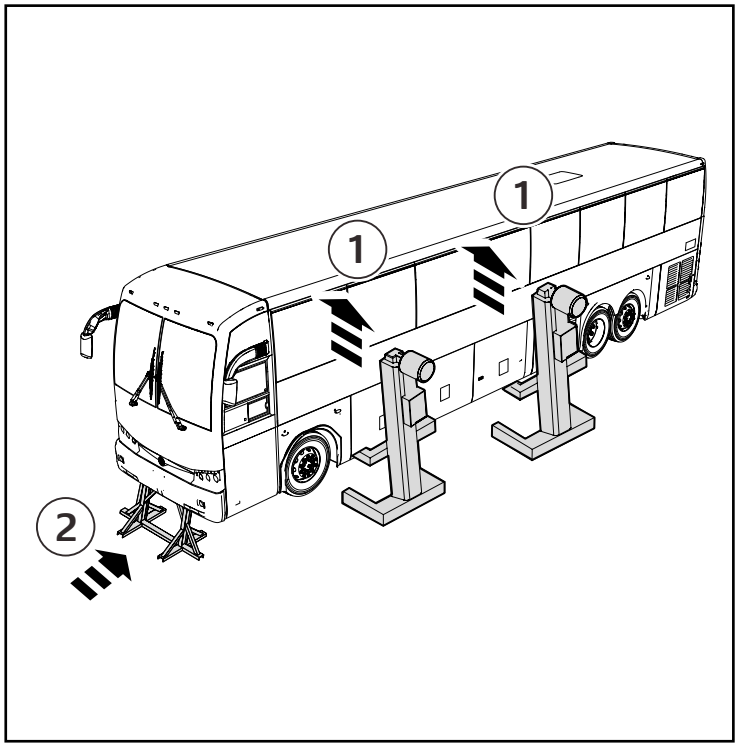

5. SERVICE PROCEDURE

5.1. REMOVING THE FRONT AXLE

1. Lift the vehicle with lifting jack.
2. Support the frame with rigid rack after lifting bus.

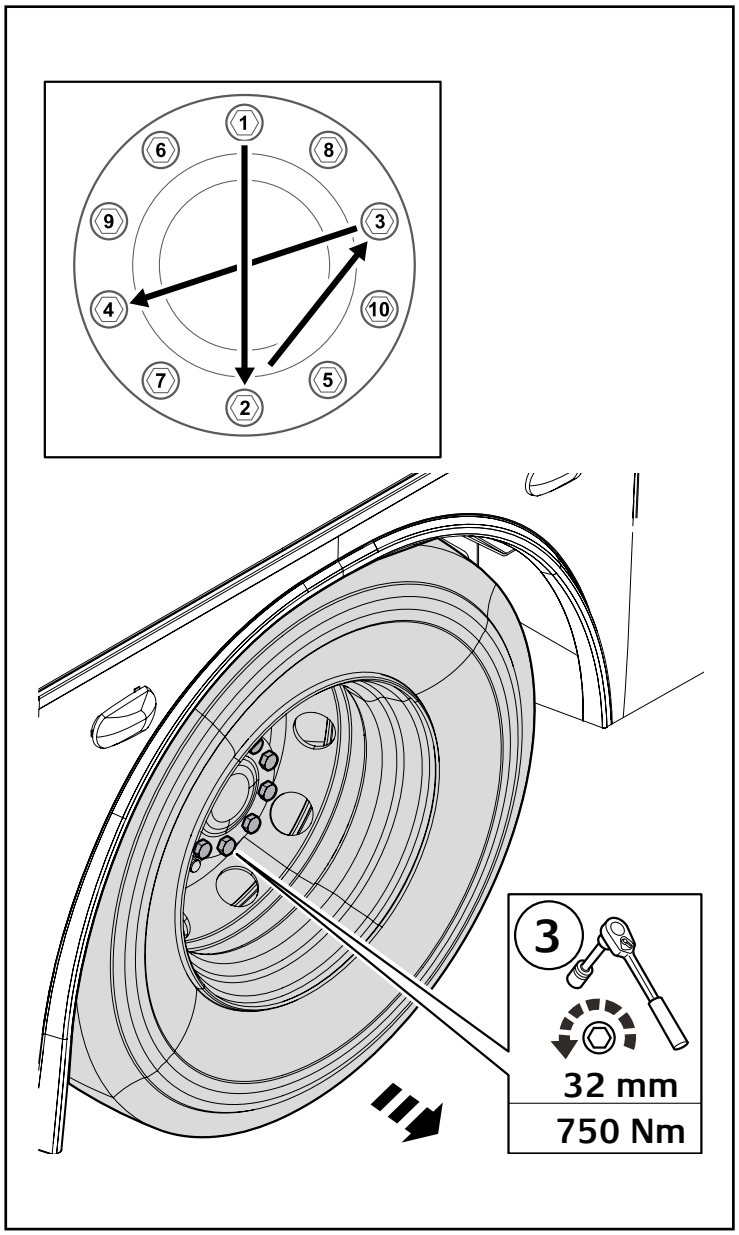

3. Screw off the wheel nuts in a crosswise pattern using a socket wrench and take off the wheel, take care not to damage the wheel stud threads.

CAUTION

- Always perform the following procedure on flat surface!
- Check tire pressure.

CAUTION

Use gloves during removal or installation of tires to prevent injury to your hands.

WARNING

- Forced removal of tires could cause the jacks to slip, resulting in the vehicle falling. Never use undue force to remove tires.
- Set the socket wrench fully over the wheel nut to prevent the wrench from disengaging from the nut.

5.1. REMOVING THE FRONT AXLE

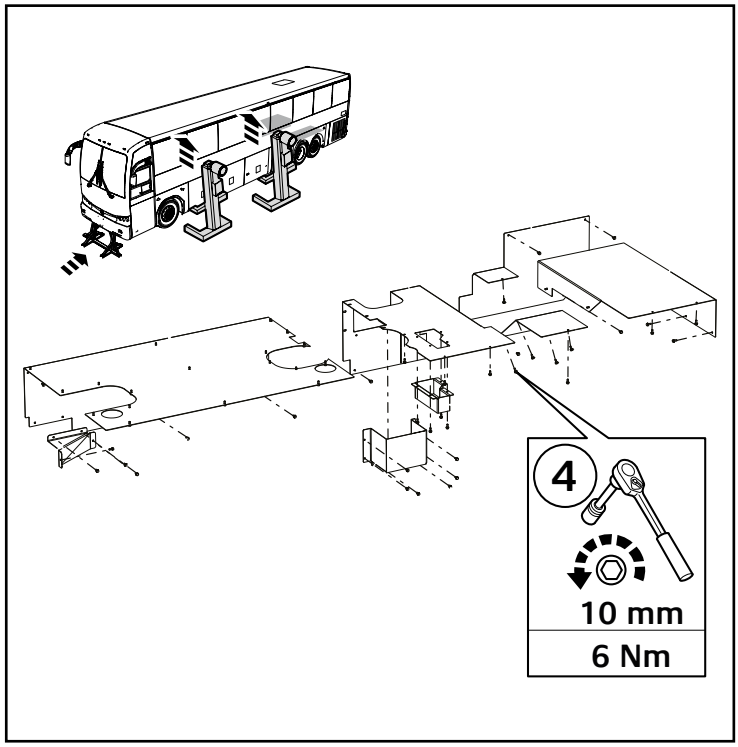

4. Remove the mud guard and chassis connection bolts.

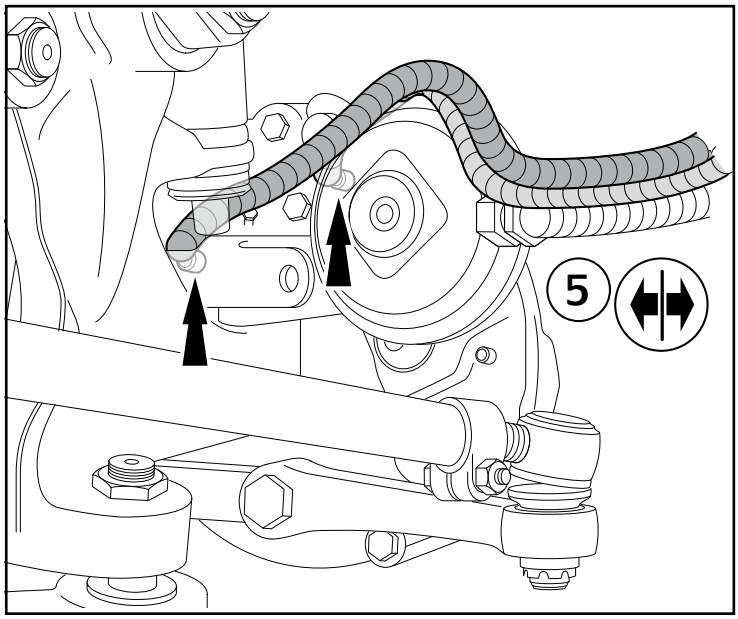

5. Remove ABS and brake sensors connections.

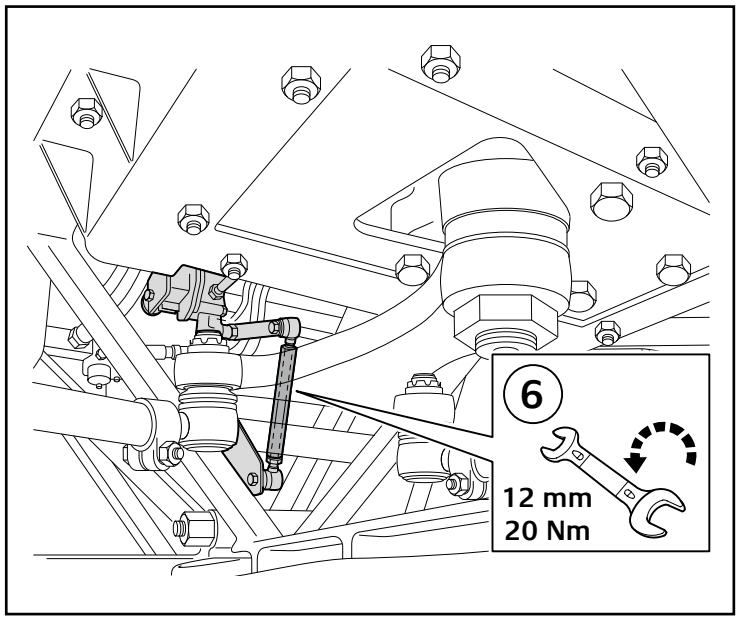

6. Discharge air bellows air with using levelling valve.

5.1. REMOVING THE FRONT AXLE

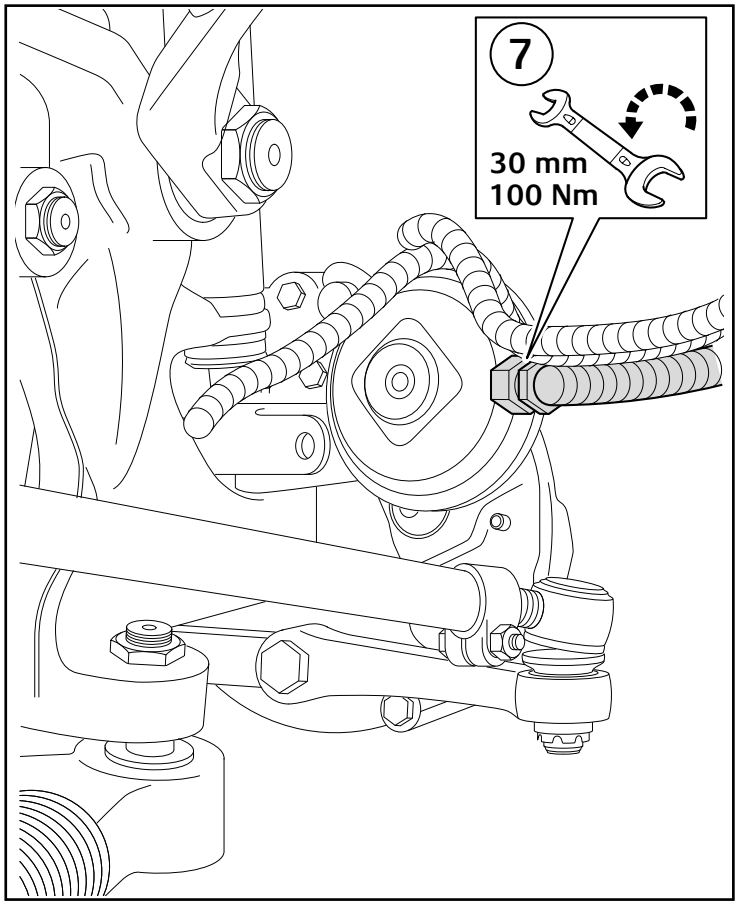

7. Remove the brake hose connections.

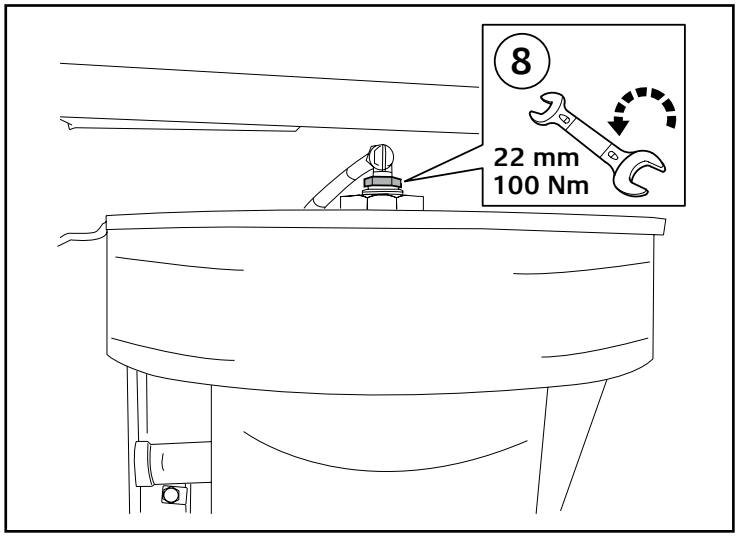

8. Remove the air line pipe connection bolt on the air bellows.

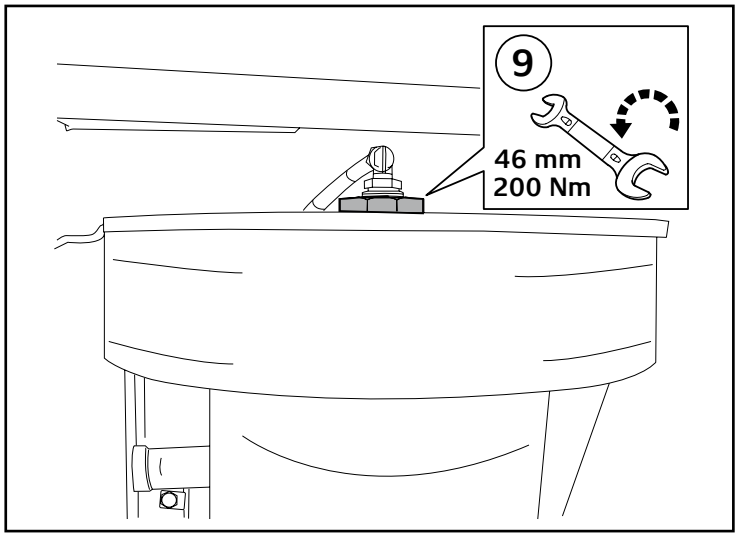

9. Remove the air bellows upper side bolts and remove chassis.

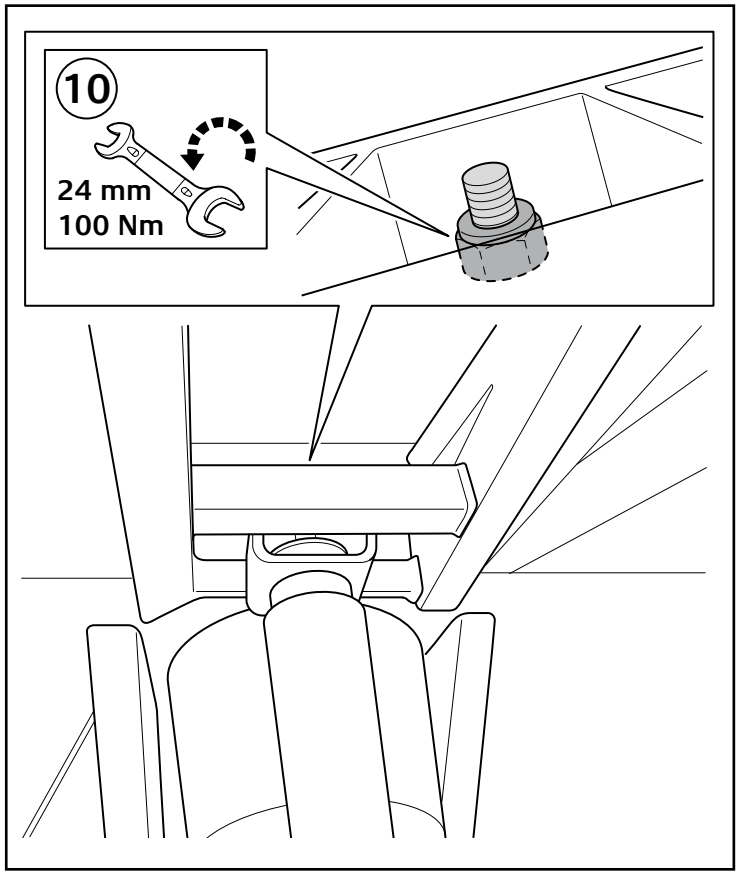

5.1. REMOVING THE FRONT AXLE

10. Remove the shock absorber upper side bolt and remove the chassis.

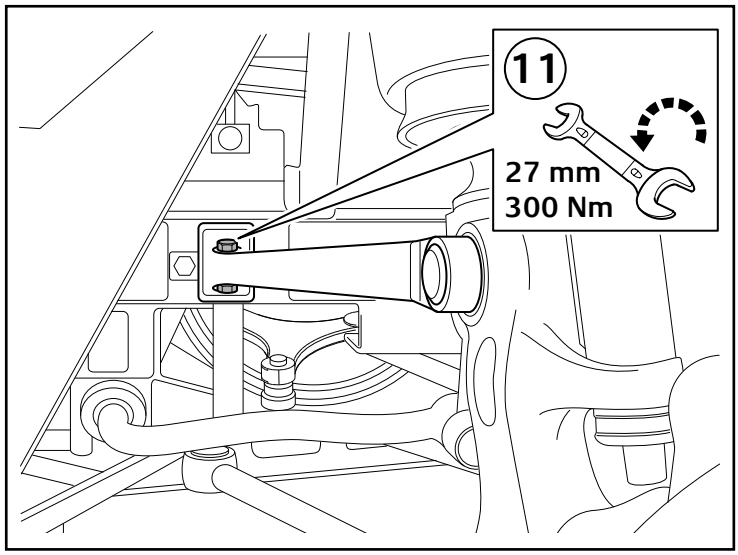

11. Remove the camber rod connection bolts from the chassis.

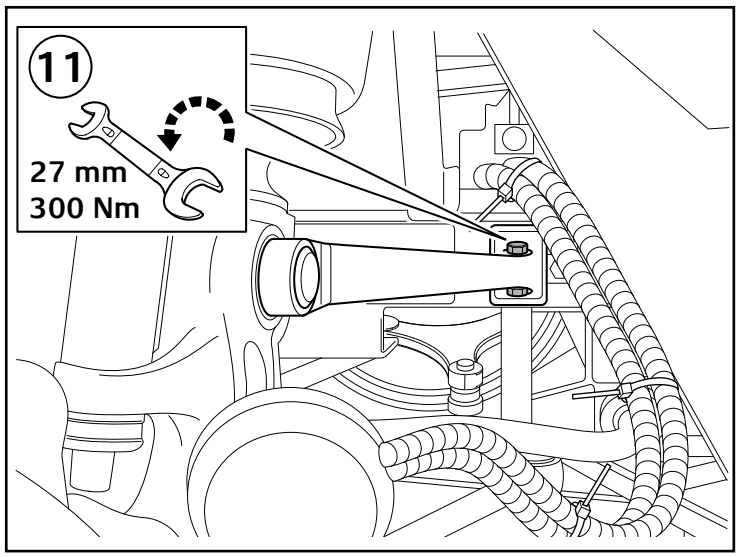

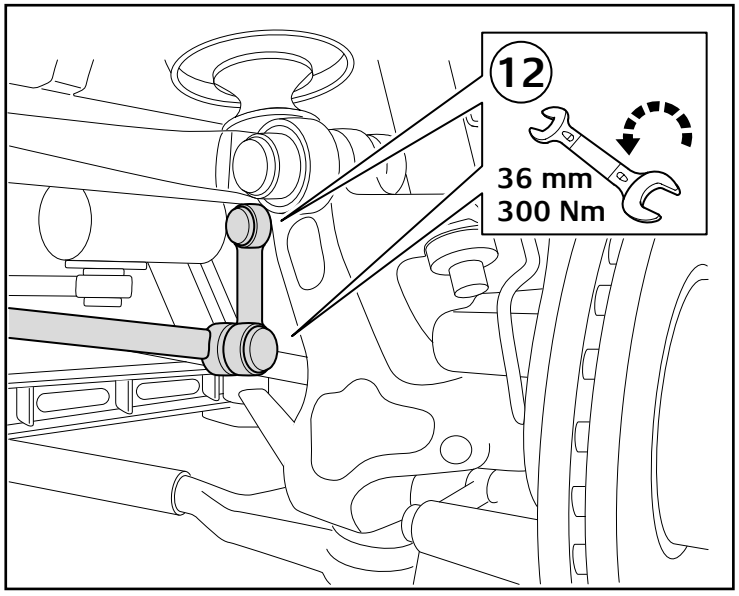

5.1. REMOVING THE FRONT AXLE

12. Remove pendulum connection bolts.

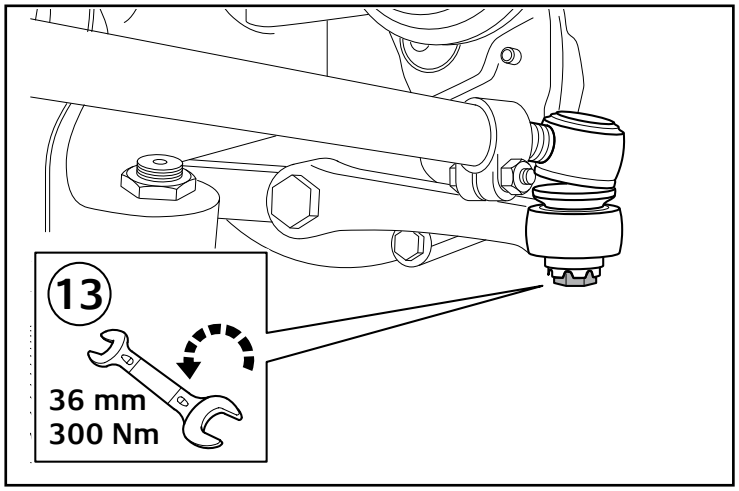

13. Remove the front axle and steering rod connection bolt.

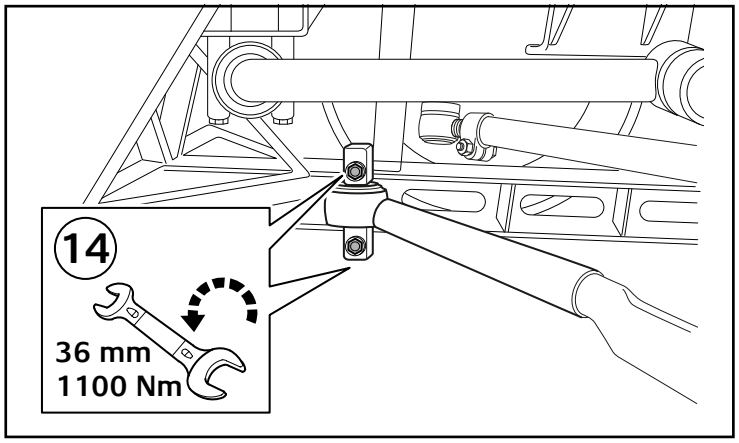

14. Remove the front axle arm connection bolts from the chassis.

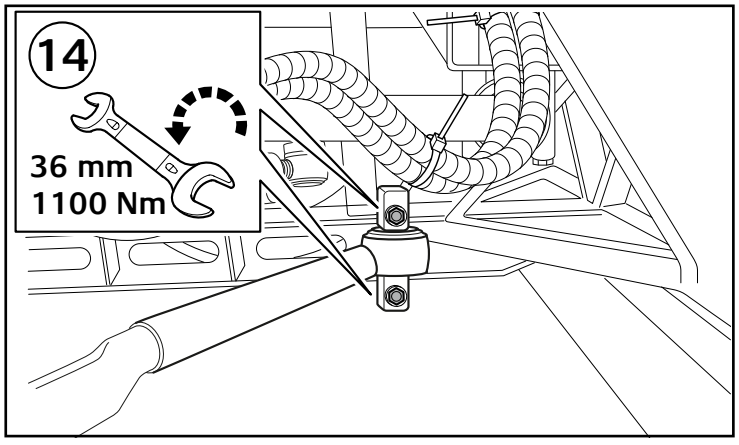

5.2. EXPLODED VIEW OF THE FRONT AXLE

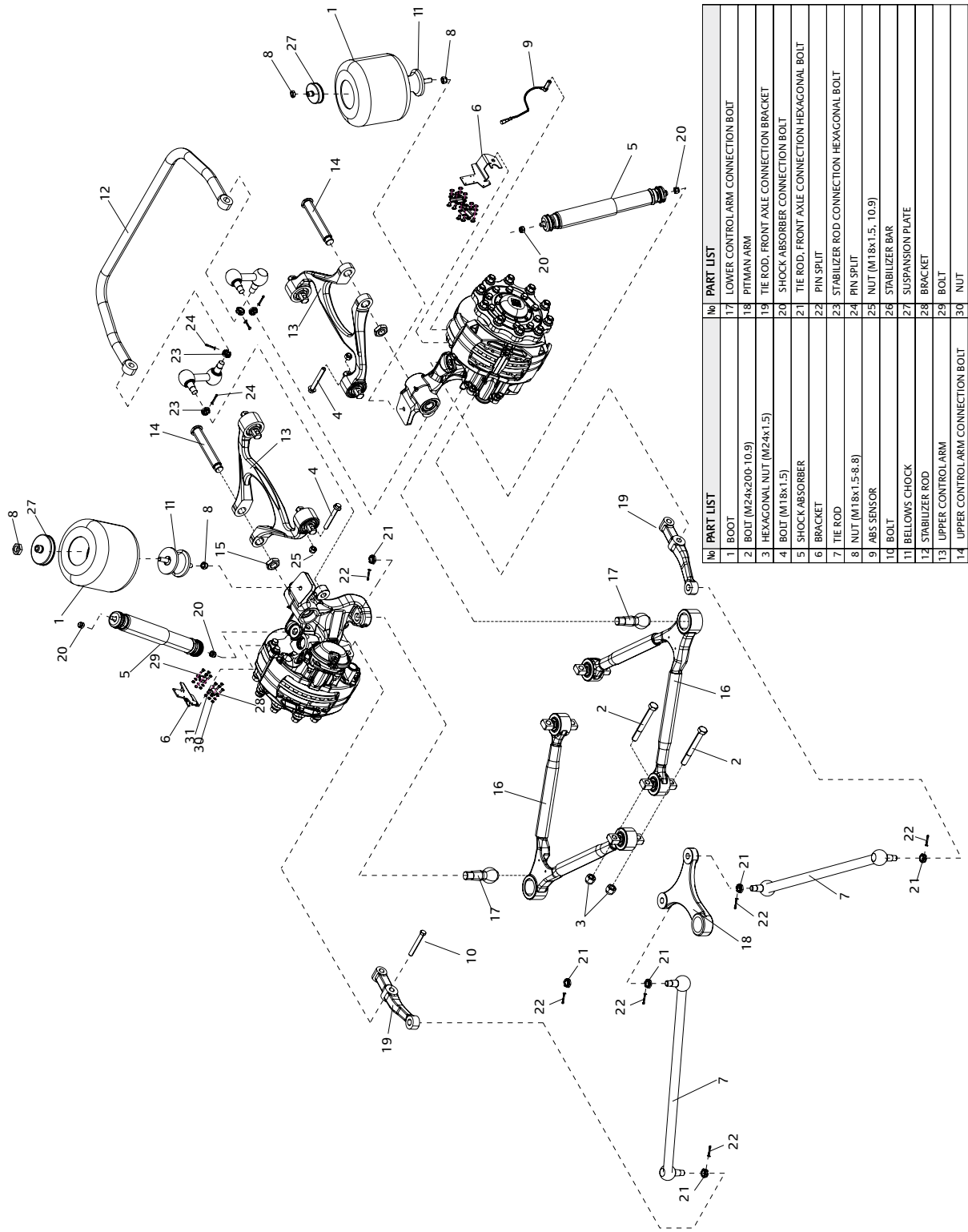

№	PART LIST
1	BOOT
2	BOLT (M24x200-10.9)
3	HEXAGONAL NUT (M24x1.5)
4	BOLT (M18x1.5)
5	SHOCK ABSORBER
6	BRACKET
7	TIE ROD
8	NUT (M18x1.5-8.8)
9	ABS SENSOR
10	BOLT
11	BELLOWS CHOCK
12	STABILIZER ROD
13	UPPER CONTROL ARM
14	UPPER CONTROL ARM CONNECTION BOLT
15	NUT
16	LOWER CONTROL ARM
17	LOWER CONTROL ARM CONNECTION BOLT
18	PITMAN ARM
19	TIE ROD, FRONT AXLE CONNECTION BRACKET
20	SHOCK ABSORBER CONNECTION BOLT
21	TIE ROD, FRONT AXLE CONNECTION HEXAGONAL BOLT
22	PIN SPLIT
23	STABILIZER ROD CONNECTION HEXAGONAL BOLT
24	PIN SPLIT
25	NUT (M18x1.5, 10.9)
26	STABILIZER BAR
27	SUSPANSION PLATE
28	BRACKET
29	BOLT
30	NUT
31	WASHER

Removal Sequence:

24 - 23 > 26 > 12
20 > 5
8 - 11 - 27 - 8 > 1
14 - 15 > 13
4 - 25 > 13
2 - 3 > 16
22 - 21 > 7 - 18 > 19
10 > 19
6 > 9 > 5
30 - 31 - 29 > 28 > 6

NOTE:
Assembly Sequence is the reverse order of the Removal Sequence.

SYMBOL	TIGHTENING TORGUE
2 (BOLT)	296 - 405 ft lbf
3 (NUT)	181 - 224 ft lbf
4 (BOLT)	72 - 109 ft lbf
8 (NUT)	217 ft lbf
14 (BOLT)	194 - 130 ft lbf
15 (NUT)	181 - 217 ft lbf
17 (BOLT)	101 - 145 ftlbf
20 (BOLT)	181 - 224 ft lbf
21 (BOLT)	217 - 289 ft lbf
23 (BOLT)	109 - 145 ft lbf

5.3. EXPLODED VIEW OF THE STABILIZER ROD

Removal Sequence:

14 - 13 > 2
3 - 6 - 4 - 5
10 - 12 - 11 > 9
12 - 8 - 15 - 7

NOTE:
Assembly Sequence is the reverse order of the Removal Sequence.

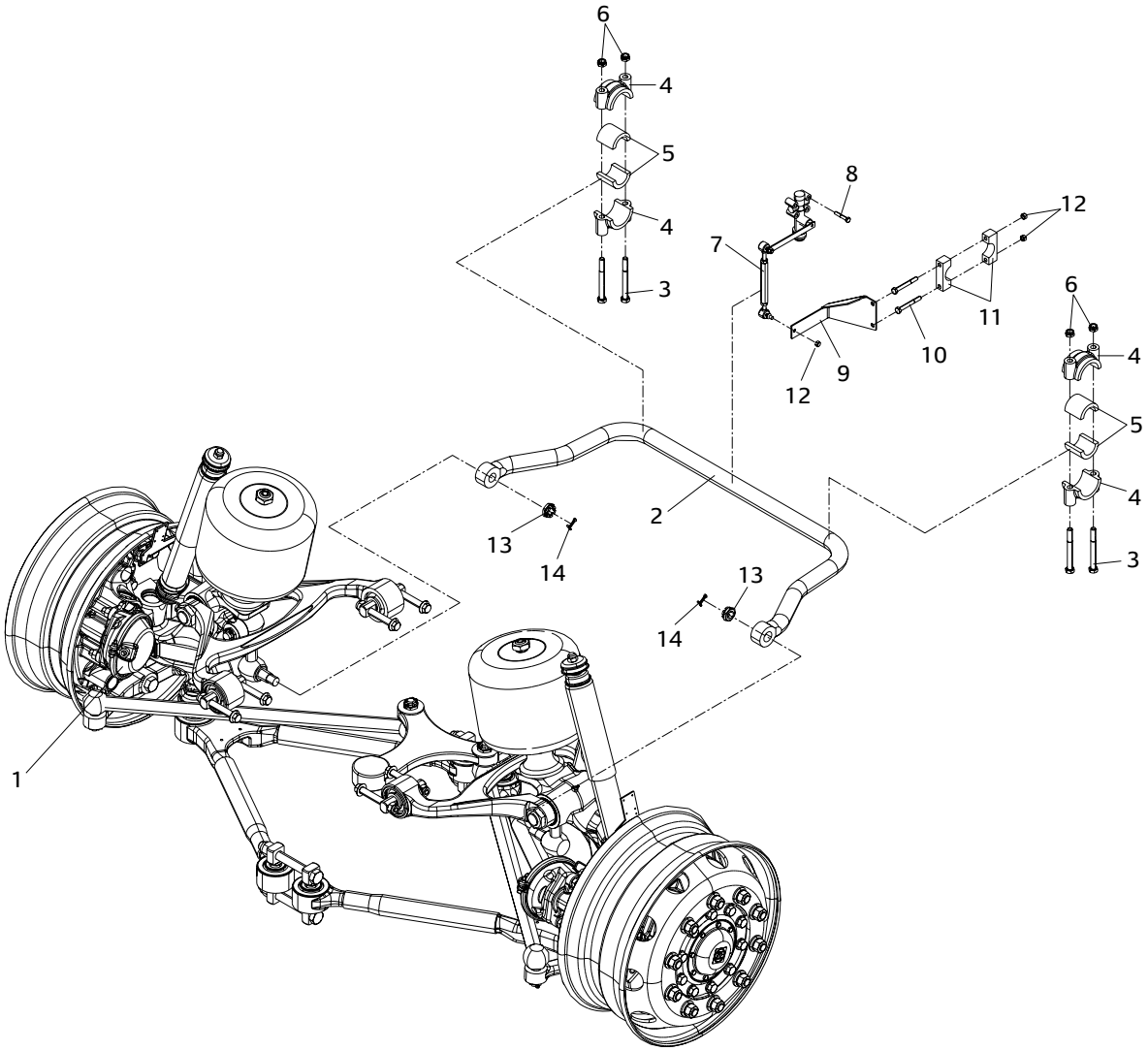

No	PART LIST	No	PART LIST
1	FRONT AXLE	9	LEVELING VALVE BRACKET
2	STABILIZER ROD	10	BOLT (M10x1.25x80-8.8)
3	BOLT	11	LEVELING VALVE BRACKET
4	STABILIZER ROD BUSHING HOUSE	12	NUT (M10)
5	STABILIZER ROD BUSHING	13	HEXAGONAL NUT
6	NUT	14	PIN SPLIT
7	VALVE ROD LEVER	15	LEVELING VALVE
8	BOLT (M8x1.25x45-8.8)		

6. TROUBLESHOOTING

SYMPTOMS \ CAUSES	Kingpin worn	Excessive clearance between kingpin and kingpin bushing	Insufficient lubrication of kingpin	Kingpin bearing seized, worn or in poor rotation	Wheel hub bearing seized, worn or in poor rotation	Excessive vertical clearance between knuckle and knuckle support	Tie rod bent	Tie rod end ball stud excessively worn	Tie rod end ball stud tightening nut loose	Tie rod arm tightening nut loose	Front axle parts over-tightened	Wheel alignment incorrect	Steering angle out of adjustment	Front suspension	Tire					
														One side of front springs sagging or broken	Tire inflation pressure unequal	Tire inflation pressure too low	Right and left tires unequal in inflation pressure	Right and left tires different in size and type	Right and left tires considerably different in outside diameter	Improper tire handling
Steering wheel shimmy	X	X			X	X		X	X	X		X			X					
Hard steering		X	X	X								X				X				
Poor returnability											X	X								
No steering							X						X							
Vehicle pulls to one side														X			X	X	X	
Front tires unevenly or prematurely worn												X			X			X		X

07 REAR AXLE

Rev.00 / 25.03.14

1. TOOLS 2

2. ON VEHICLE ADJUSTMENT AND INSPECTION 3

3. SERVICE PROCEDURE 4

3.1. Removing The Rear Axle 4

3.2. Removing The Second Rear Axle 9

3.3. General View Of The Second Rear Axle 15

4. TROUBLESHOOTING 16

GENERAL

- If work is performed by people who do not have the necessary training to carry out the work or if this information is handled carelessly or totally ignored, this may result in severe injury and/or death. Inaddition, serious damage to the vehicle may occur.
- Always read the safety instructions in full before starting certain operations. The safety instructions stipulate which aspects must be considered to achieve maximum safety. The information is given that is very important for health and safety.
- Always work in adequately ventilated rooms with sufficient lighting, free from dirt and clutter. Never leave tools or parts lying around, keep away from (high-) voltage sources that present a risk of short-circuiting. Always wear protective clothing. Do not wear any damaged or loose-fitting clothing and remove jewelry before starting the work. In case of long hair use hairnet.

1. TOOLS

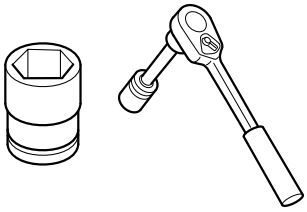 Impact Socket	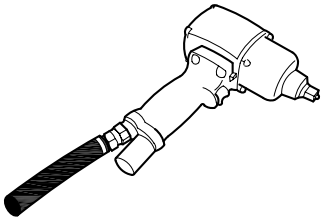 Impact Wrenches	 Double Ended Ring Spanner
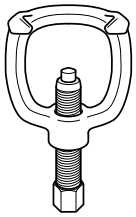 Puller	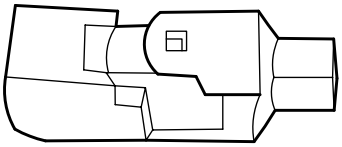 Universal Joint	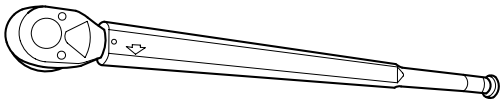 Torque Wrench 200 Nm
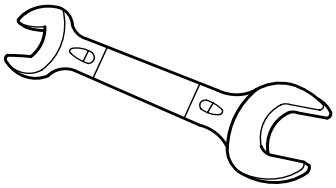 Open Wrench Double Ended	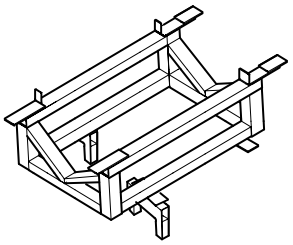 Rear Axle Carrying Jack	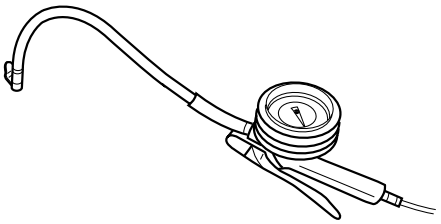 Tire Pressure Equipment
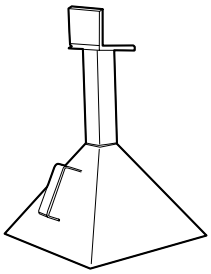 Rigid Rack	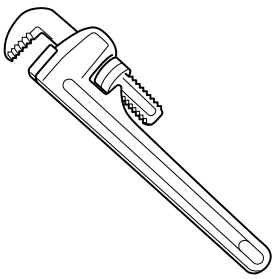 Pipe Wrench	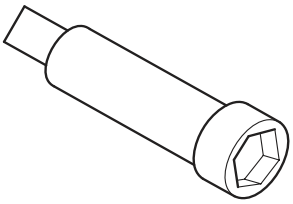 Short Arm
Front Axle Carrying Jack	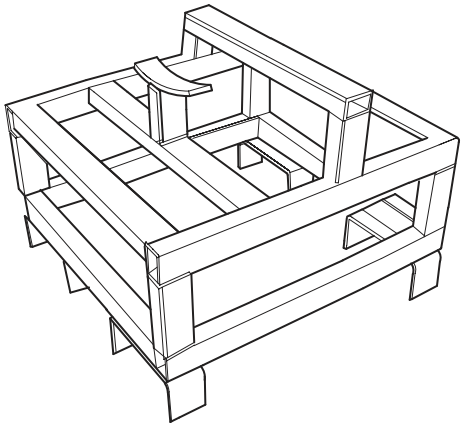	

2. ON VEHICLE ADJUSTMENT AND INSPECTION

1. For adjusting misalignment of rear axle fully loosen castle nut on the rear axle lower arm.

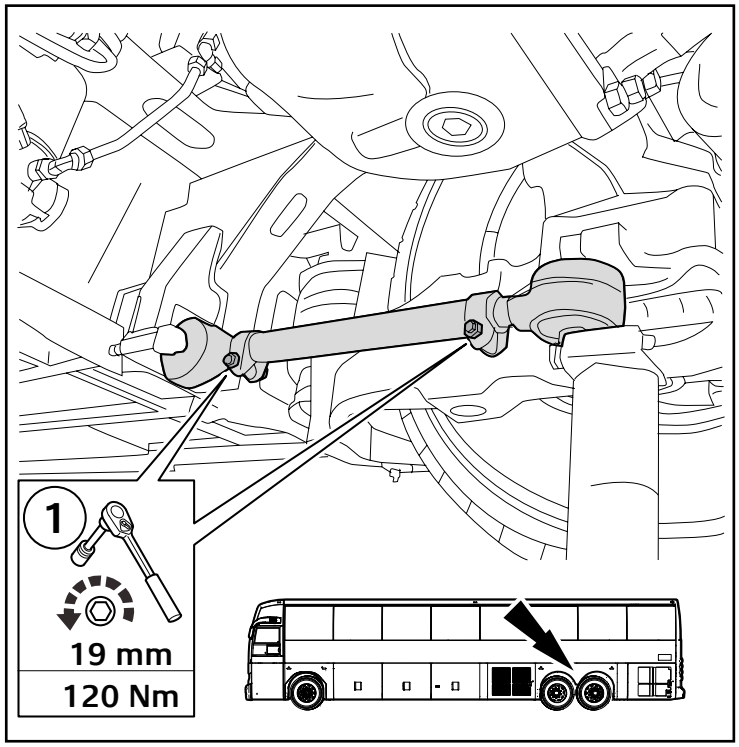

2. Using a pipe wrench rotate the axle lower arm clockwise to adjust the axle forwards to fall within in a standard value range.
3. Using a pipe wrench rotate the axle lower arm anti clockwise to adjust the axle backwards to fall within in a standard value range.

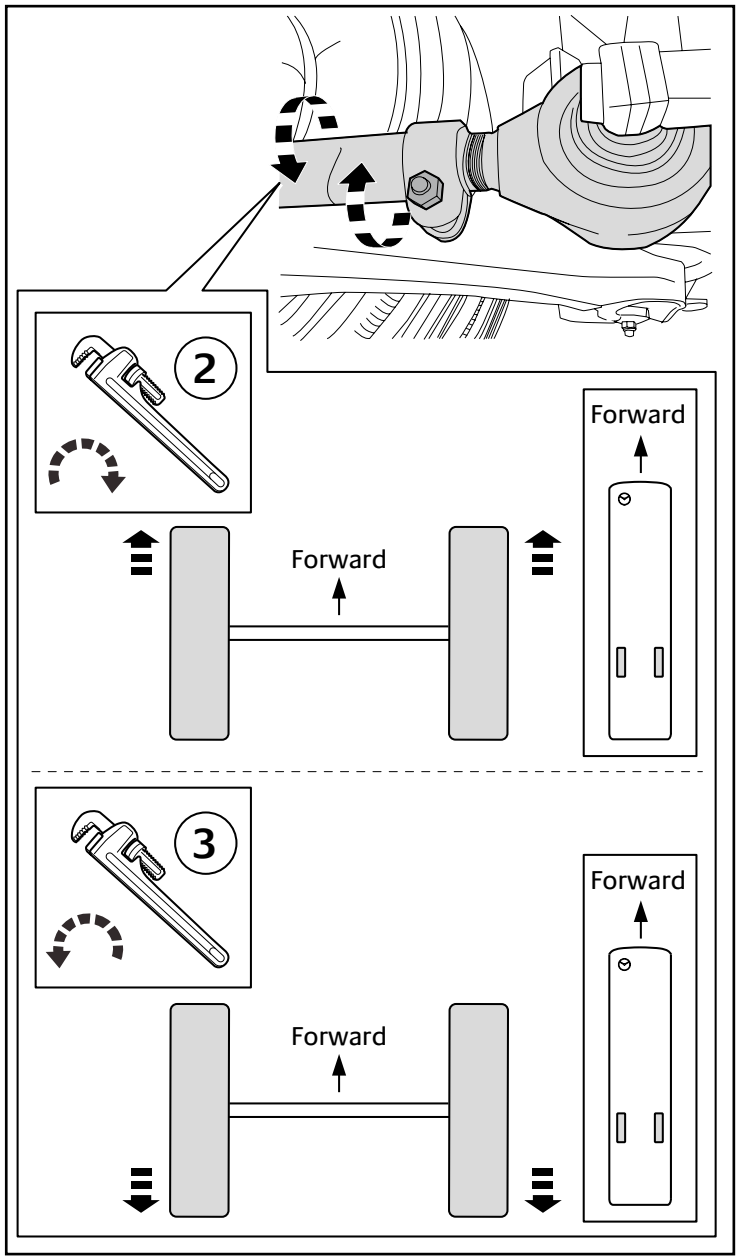

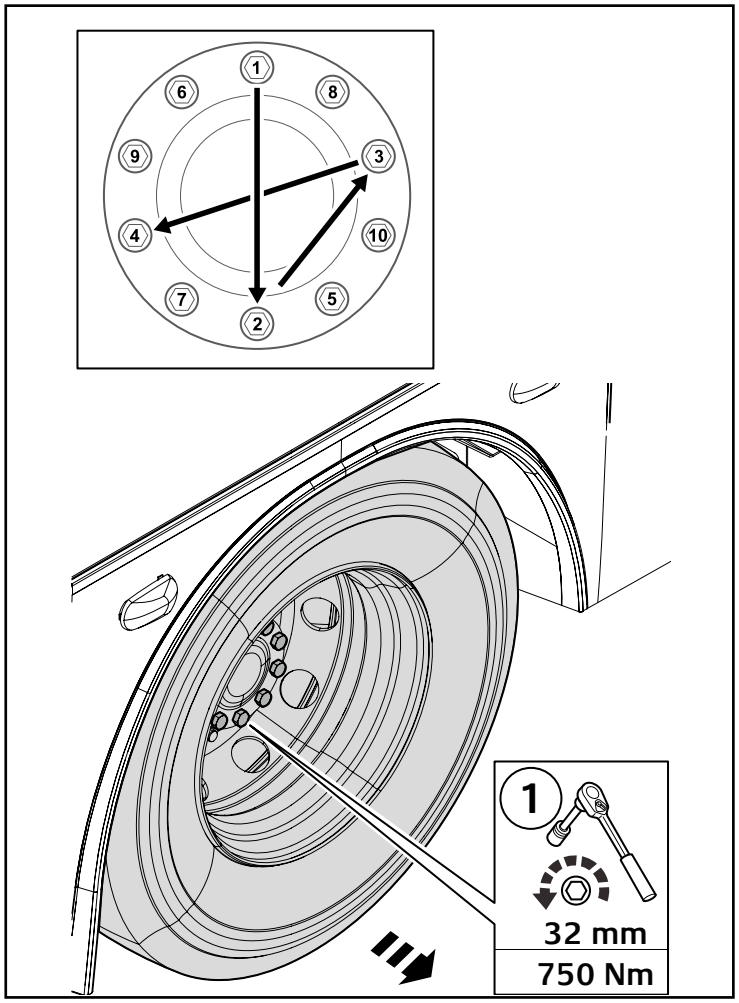

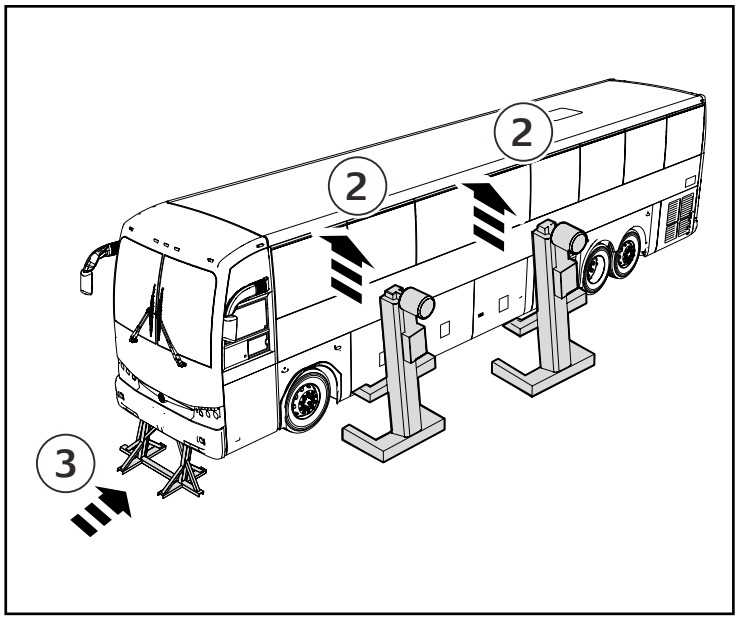

3. SERVICE PROCEDURE

3.1. REMOVING THE REAR AXLE

1. Loosen the wheel nuts in a crosswise pattern using a socket wrench, but do not remove the wheel before the vehicle is jacked up. Take care not to damage the wheel stud threads.
2. Lift the vehicle with lifting jack.
3. Support the frame with rigid rack after lifting bus.
4. Remove the wheel nuts in a crosswise pattern using a socket wrench and take off the wheel. Take care not to damage the wheel stud threads.

CAUTION

- Always perform the following procedure on flat surface!
- Check tire pressure.

CAUTION

Use gloves during removal or installation of tires to prevent injury to your hands.

WARNING

- Never use undue force to remove the tires. This could cause the jack to slip, resulting in the vehicle falling.
- Set the socket wrench fully over the wheel nut, otherwise the wrench could disengage from the nut.

3.1. REMOVING THE REAR AXLE

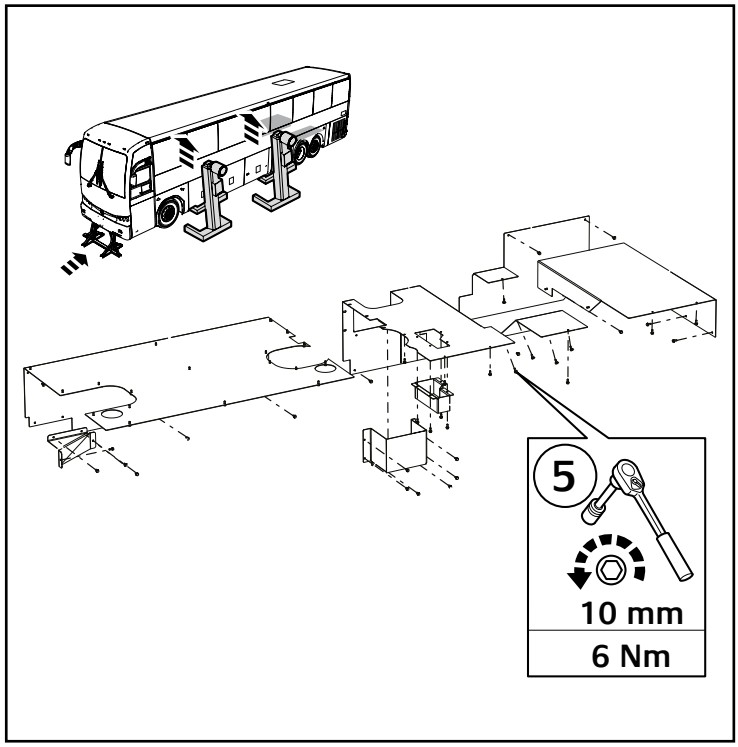

5. Remove the mud guard and chassis connection bolts.

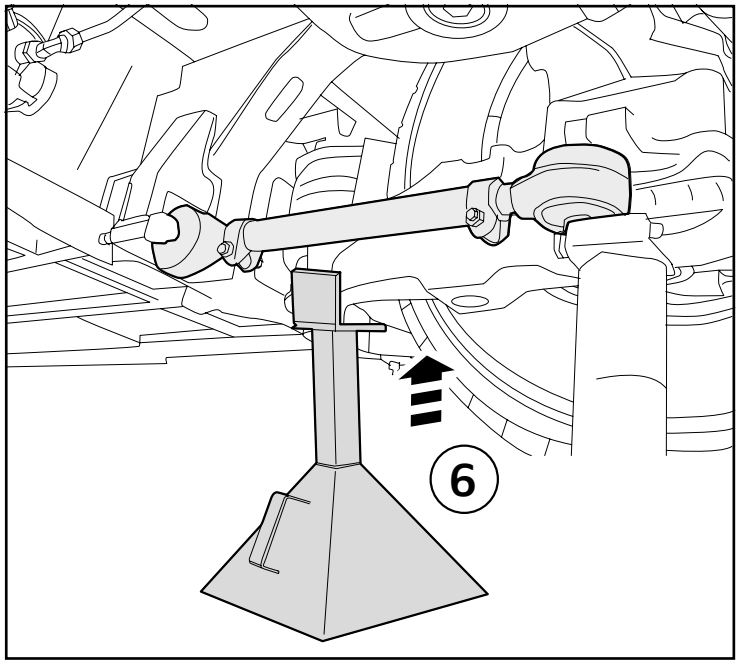

6. Place the supporting rigid rack under the rear axle.

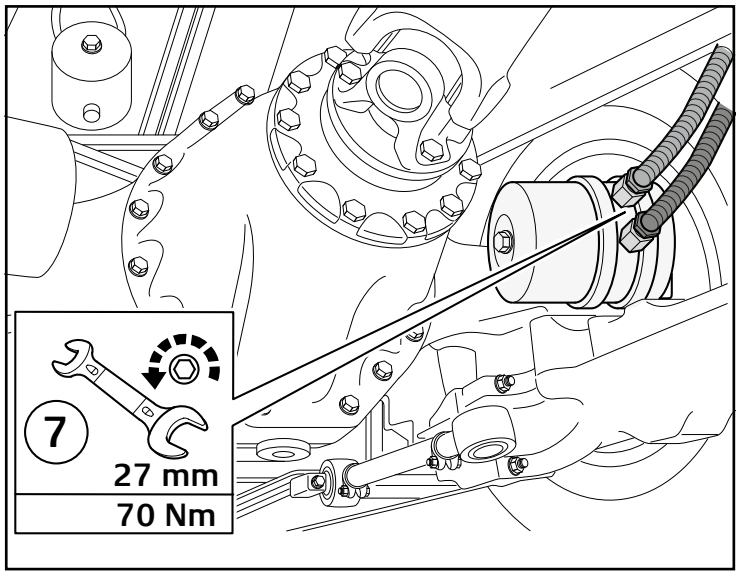

7. Remove ABS sensor and brake air hose connection.

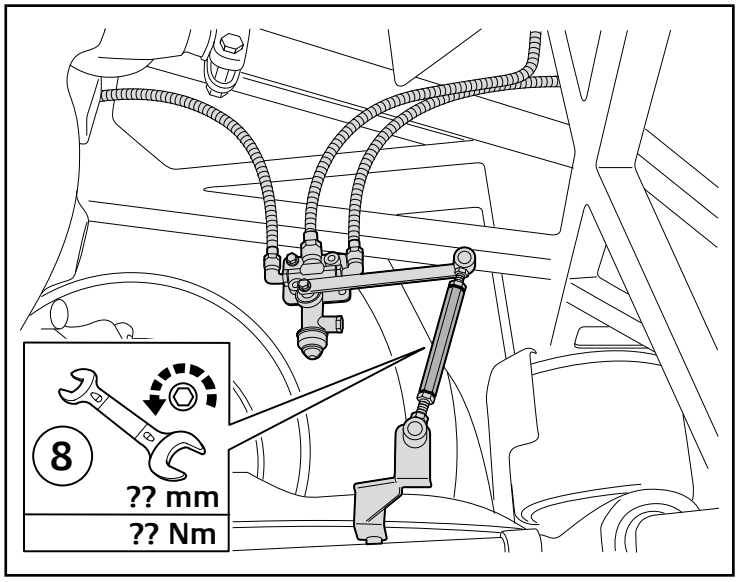

3.1. REMOVING THE REAR AXLE

8. Remove the levelling valve and levelling bracket connection bolts.

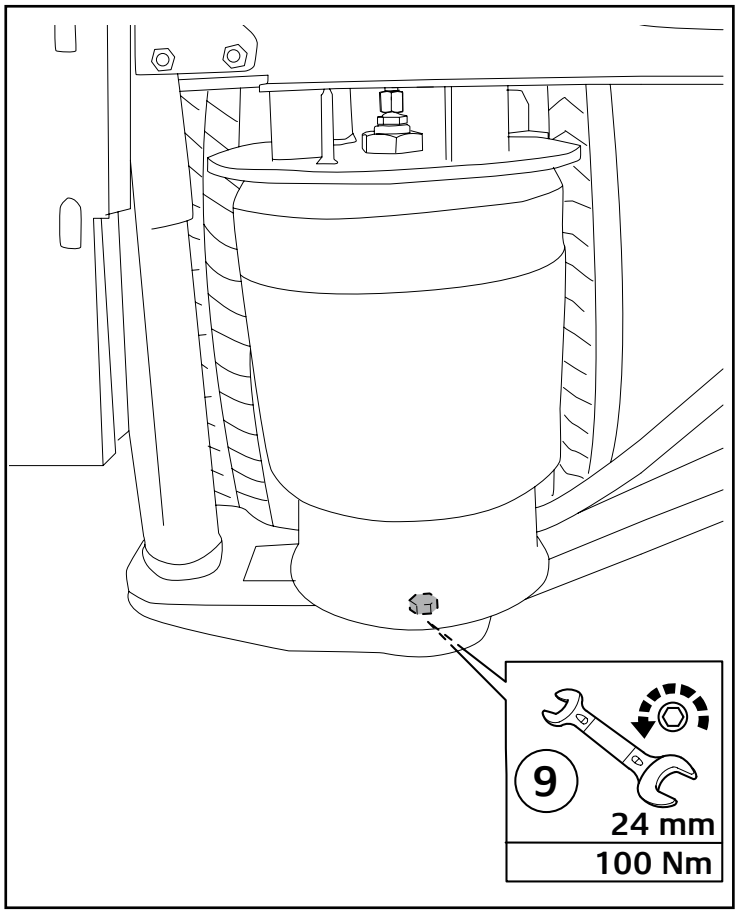

9. Remove the air line pipe connection bolt on the air bellows.

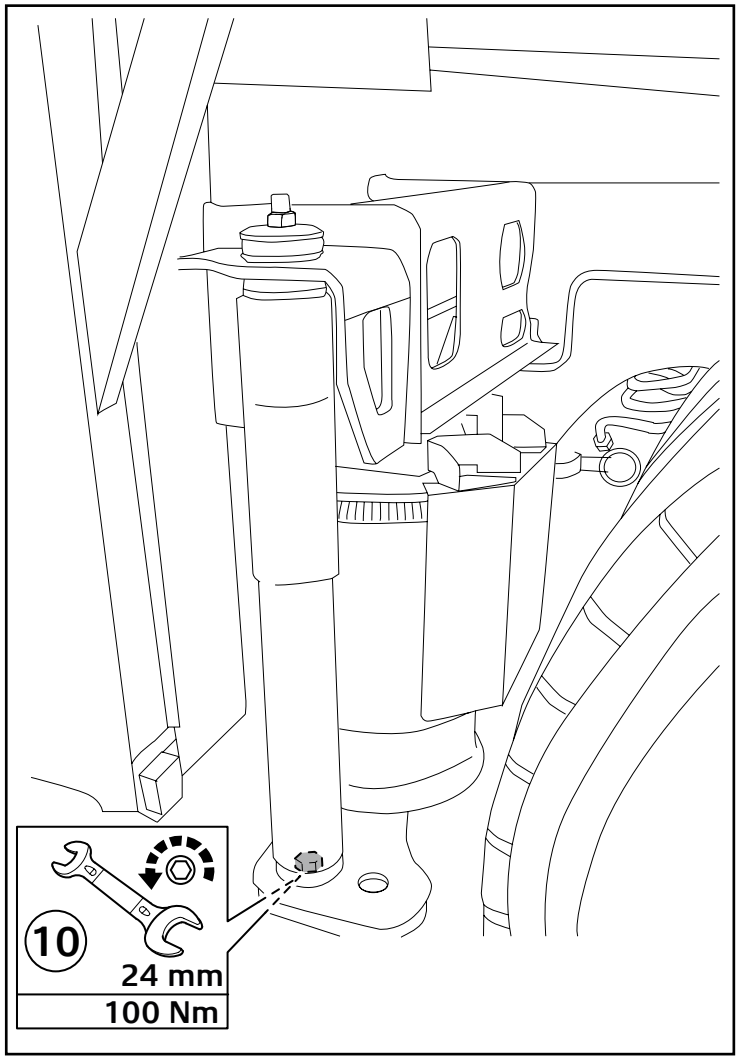

3.1. REMOVING THE REAR AXLE

10. Remove the lower connection of shock-absorber.

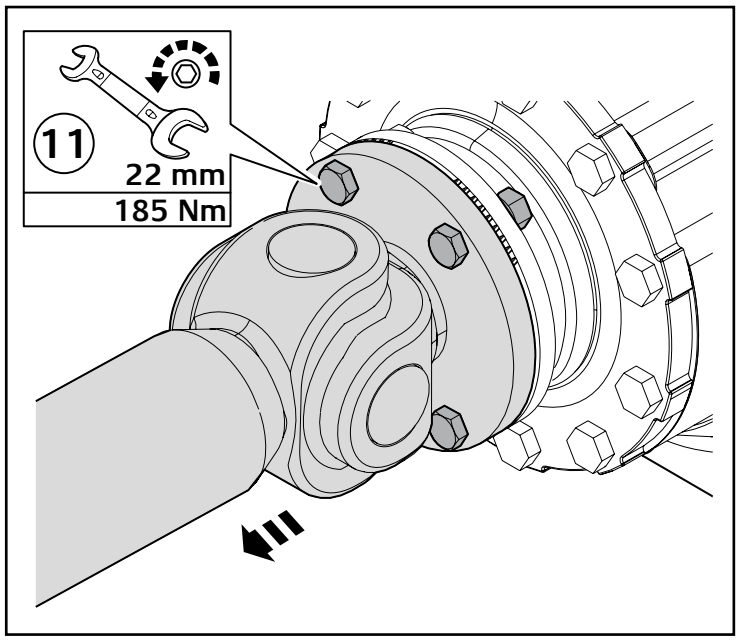

11. Remove the rear axle and shaft connection bolts and separate the shaft from the rear axle.

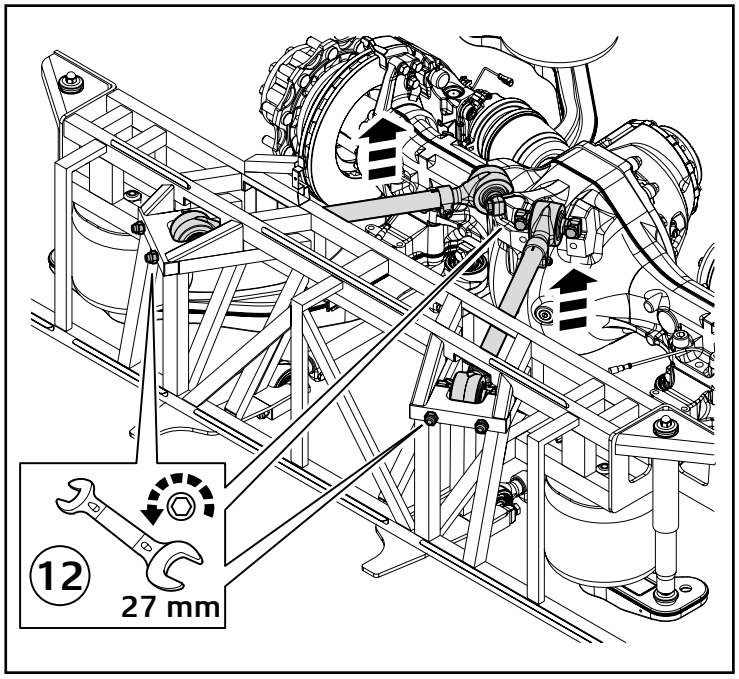

3.1. REMOVING THE REAR AXLE

12. Remove the rear axle upper arms connections bolts and remove the rear axle upper arm from the chassis.

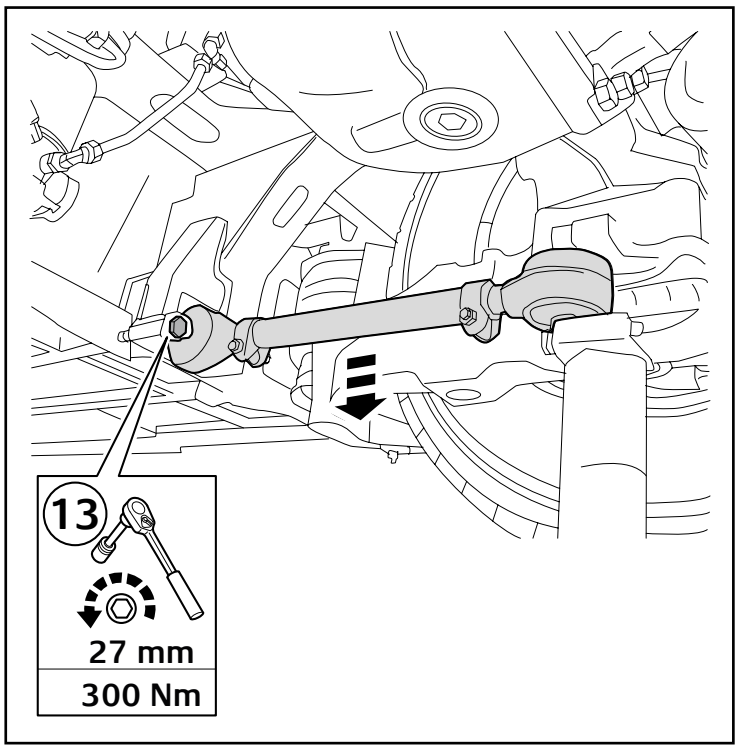

13. Remove the rear axle lower arms connection bolt and remove the rear axle arm from the chassis.

WARNING

- Check all wiring, piping and other parts, are removed from transmission.
- When moving the axle be careful not to allow it to hit body or other parts.

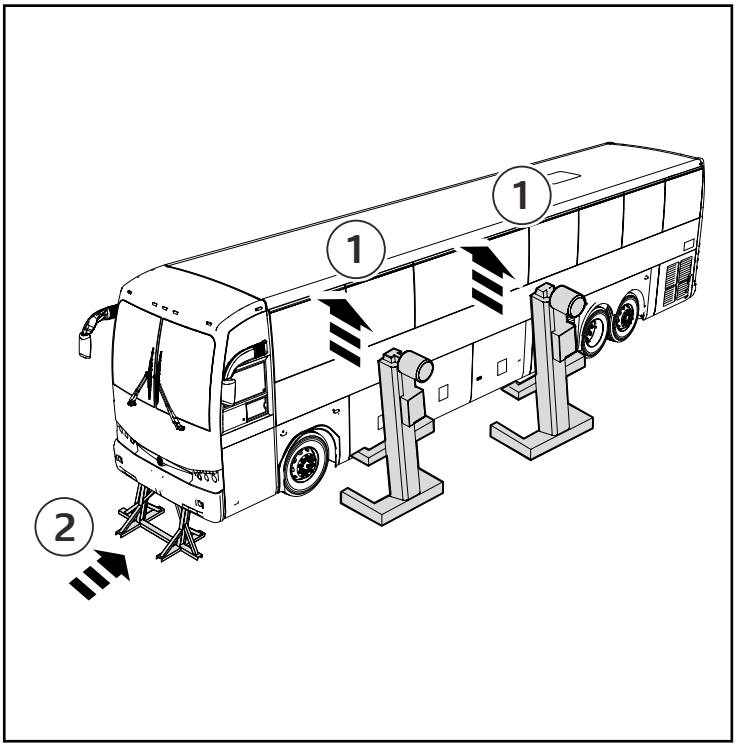

3.2. REMOVING THE SECOND REAR AXLE

1. Lift the vehicle with lifting jack.
2. Support the frame with rigid rack after lifting bus.

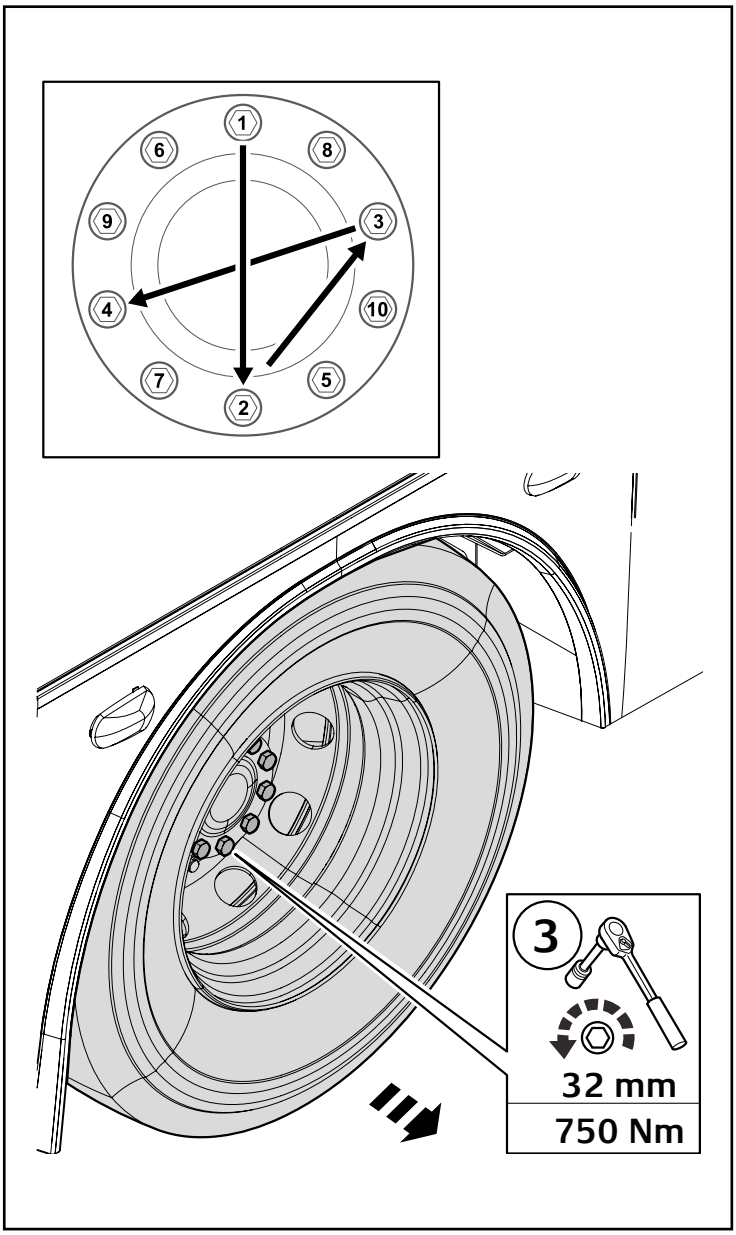

3. Screw off the wheel nuts in a crosswise pattern using a socket wrench and take off the wheel, take care not to damage the wheel stud threads.

CAUTION

- Always perform the following procedure on flat surface!
- Check tire pressure.

CAUTION

Use gloves during removal or installation of tires to prevent injury to your hands.

WARNING

- Forced removal of tires could cause the jacks to slip, resulting in the vehicle falling. Never use undue force to remove tires.
- Set the socket wrench fully over the wheel nut to prevent the wrench from disengaging from the nut.

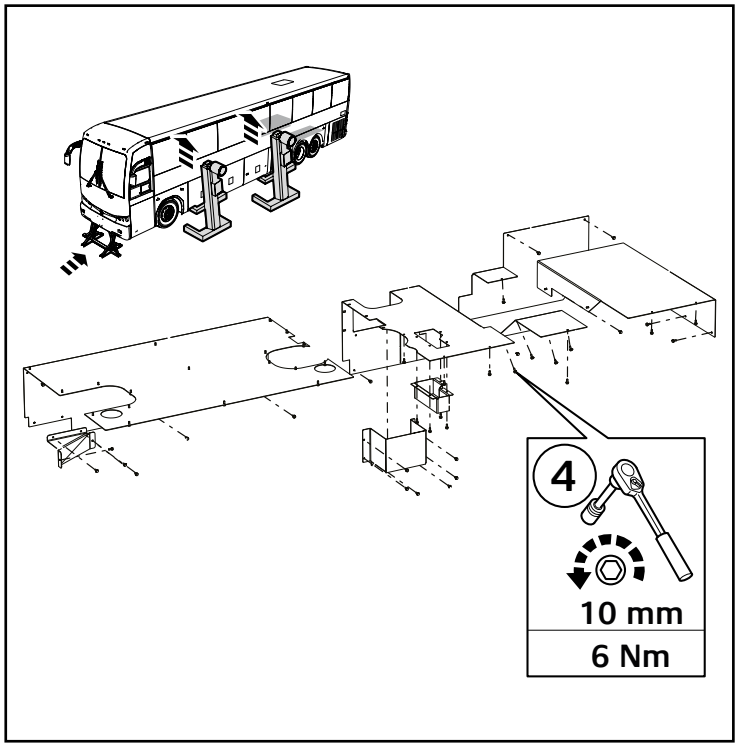

3.2. REMOVING THE SECOND REAR AXLE

4. Remove the mud guard and chassis connection bolts.

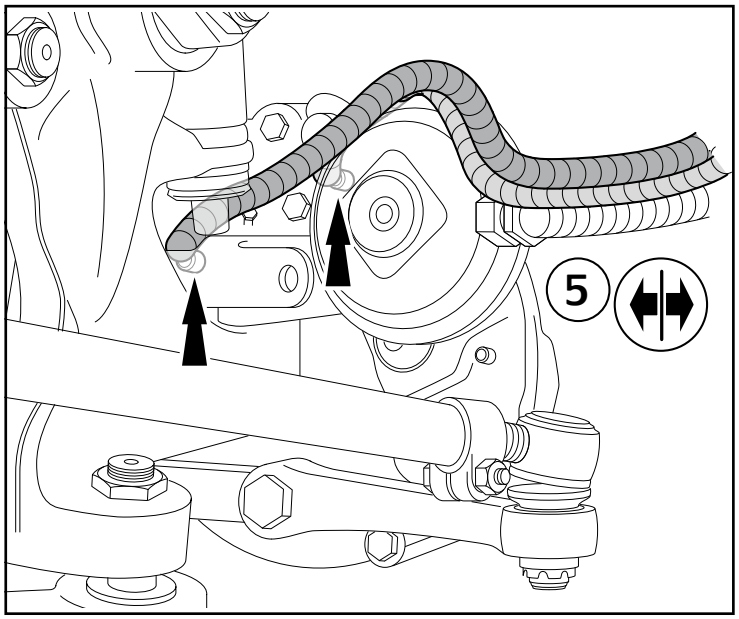

5. Remove ABS and brake sensors connections.

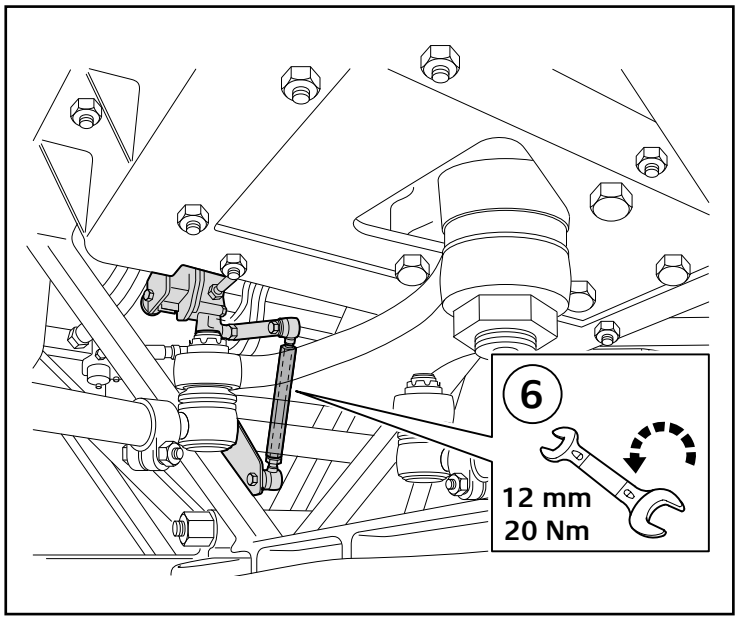

6. Discharge air bellows air with using levelling valve.

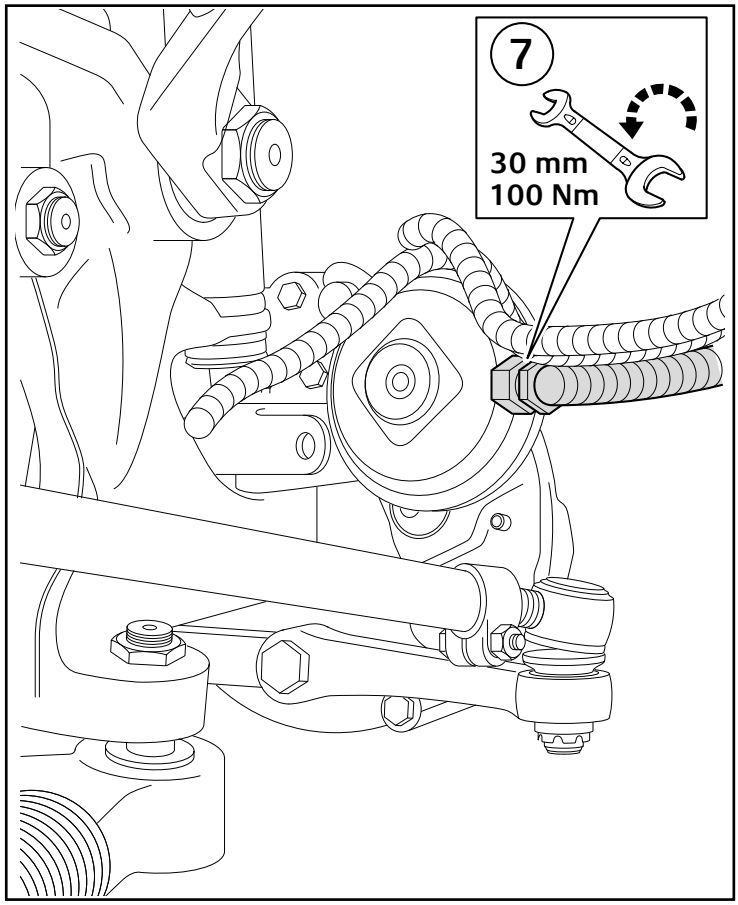

3.2. REMOVING THE SECOND REAR AXLE

7. Remove the brake hose connections.

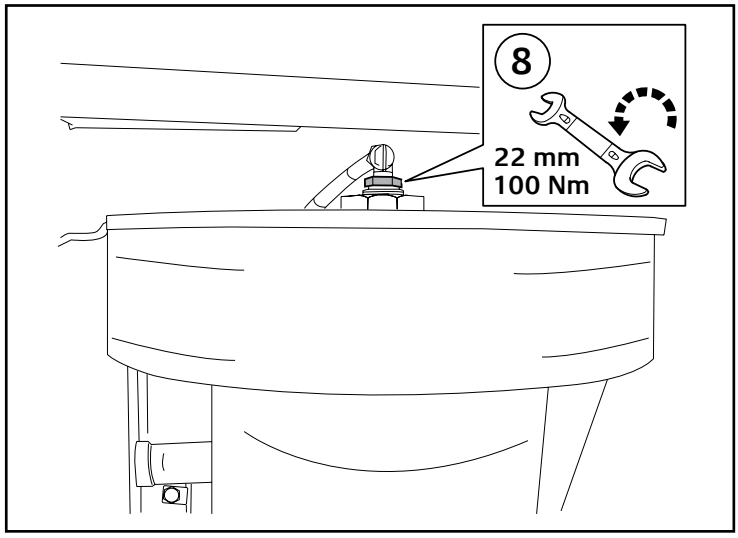

8. Remove the air line pipe connection bolt on the air bellows.

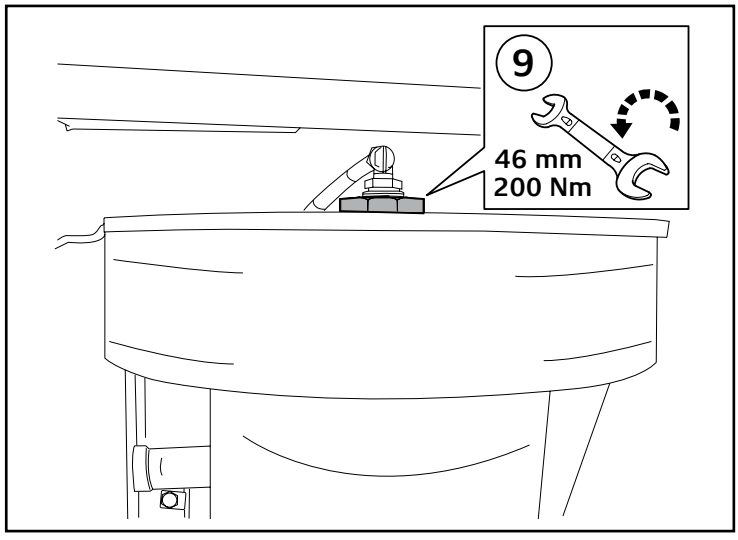

9. Remove the air bellows upper side bolts and remove chassis.

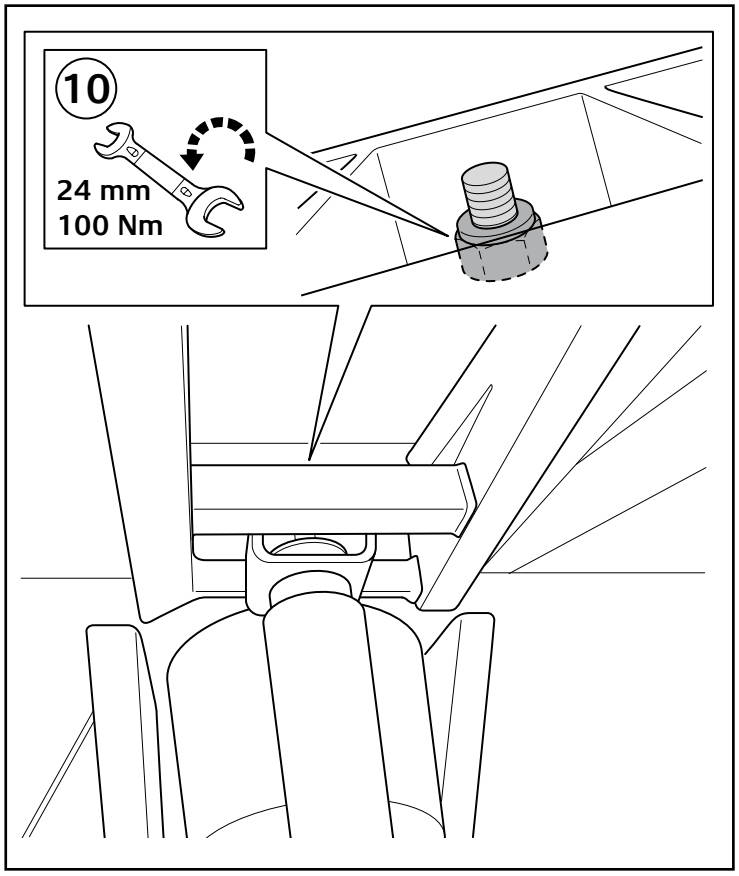

3.2. REMOVING THE SECOND REAR AXLE

10. Remove the shock absorber upper side bolt and remove the chassis.

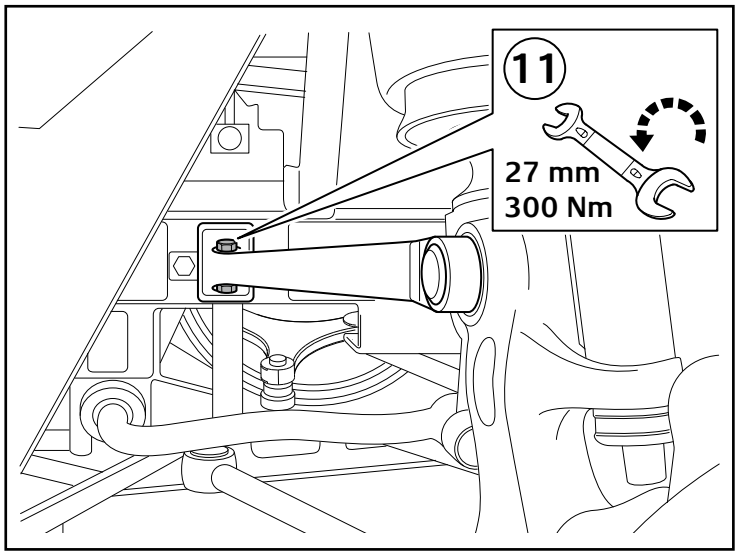

11. Remove the camber rod connection bolts from the chassis.

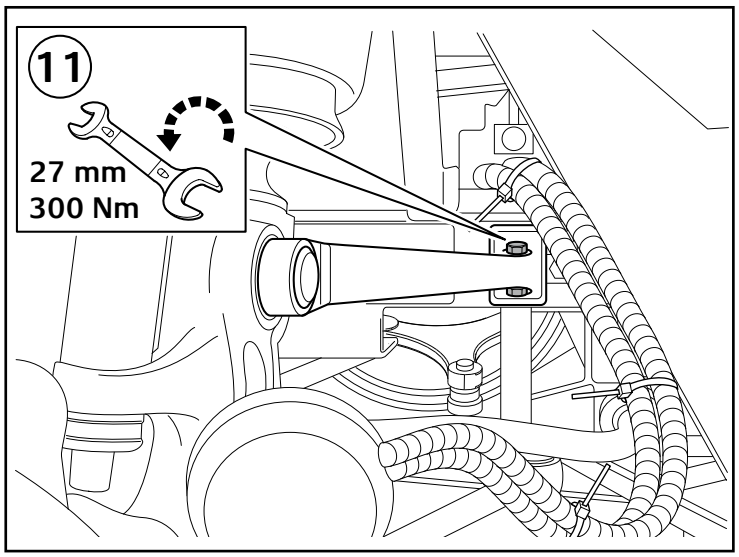

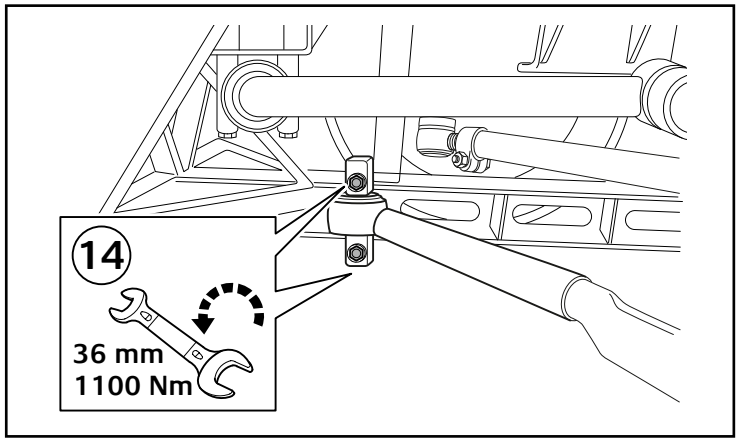

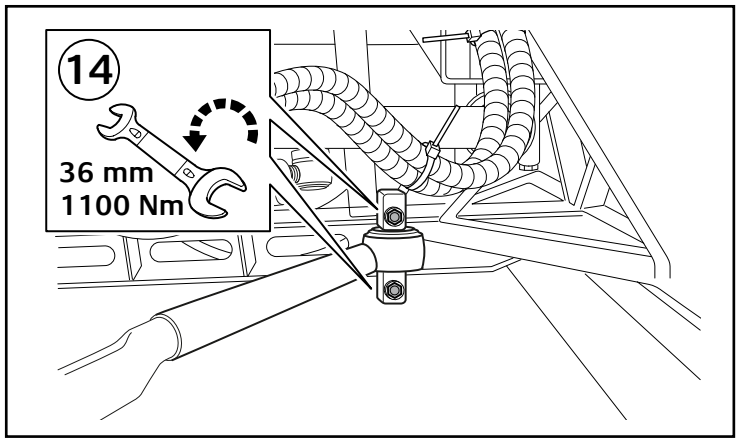

3.2. REMOVING THE SECOND REAR AXLE

12. Remove the second rear axle arm connection bolts from the chassis.

3.2. EXPLODED VIEW OF THE REAR AXLE

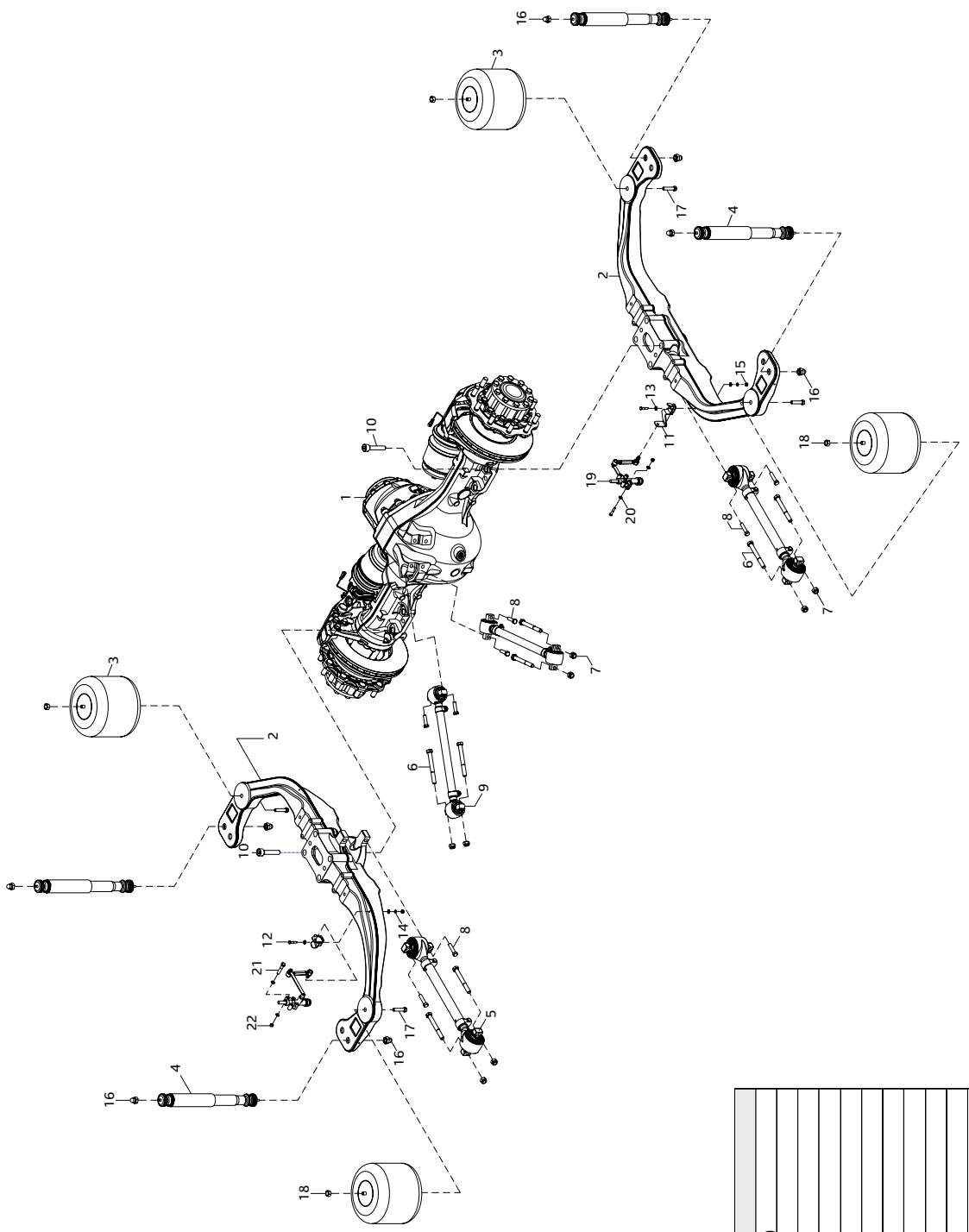

Removal Sequence:

21 - 22 - 20 > 19
12 - 13 - 15 - 14 > 5
6 - 7 > 9 > 1
8 > 4
16 > 3
18 - 17 > 2
10 > 2

Note:
Assembly sequence is the reverse order of the Removal Sequence.

SYMBOL	TIGHTENING TORGUE
6	332 ft lbf
16	206 - 236 ft lbf
18	118 - 133 ft lbf

No	PART LIST
1.	REAR AXLE
2.	BEAM SUPPORT
3.	AIR BELLOW
4.	SHOCK ABSORBER
5.	AXLE LOWER ARM
6.	BOLT (M18X2X160)
7.	NUT
8.	BOLT
9.	AXLE UPPER ARM
10.	BOLT
11.	BRACKET, LEVELING VALVE

No	PART LIST
12.	BOLT (M8X1.25X40)
13.	WASHER
14.	WASHER, PLAIN
15.	NUT
16.	NUT
17.	BOLT (M18X2X60)
18.	NUT (M30X1.5)
19.	LEVELING VALVE
20.	WASHER
21.	BOLT
22.	NUT

3.3. GENERAL VIEW OF THE SECOND REAR AXLE

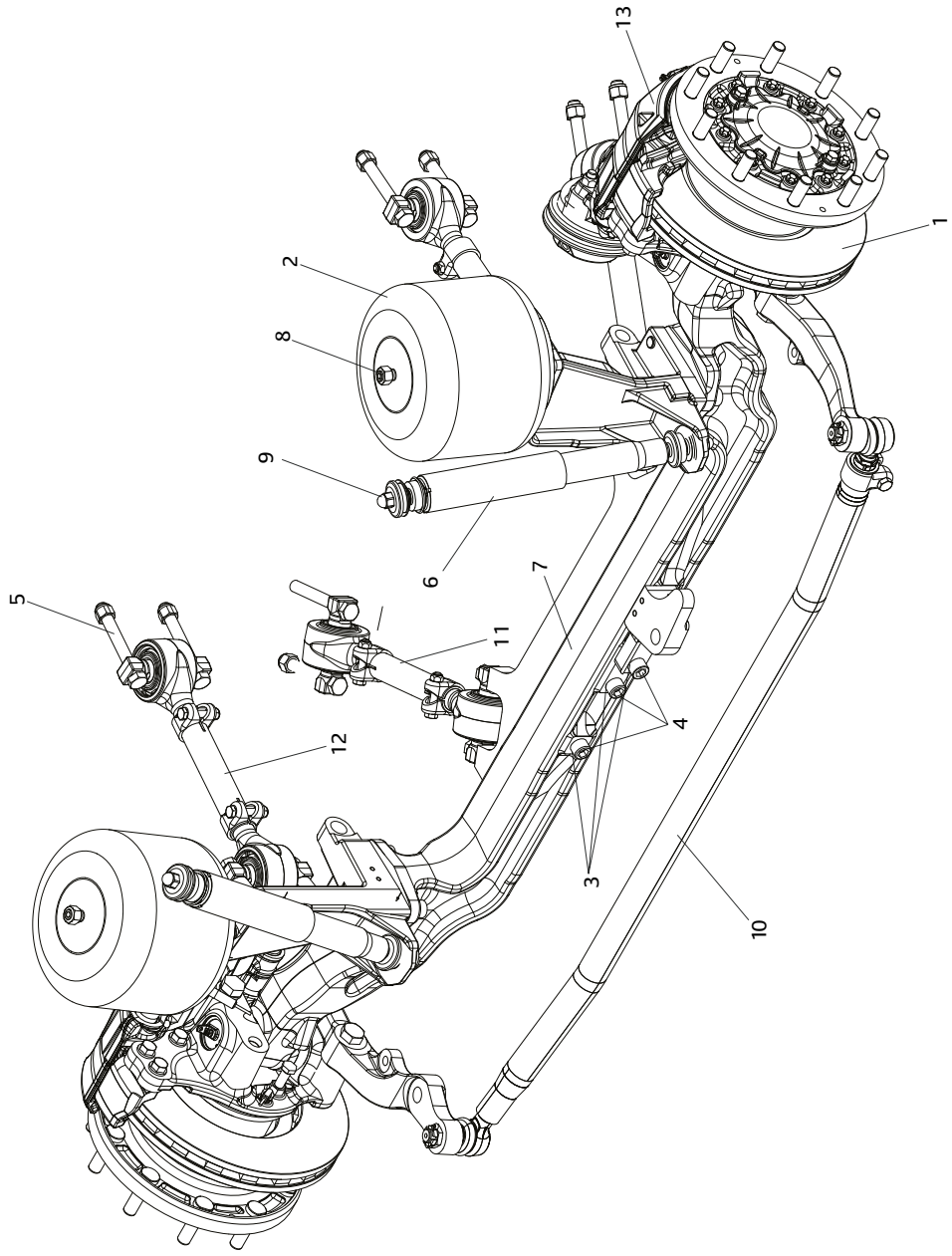

No	PART LIST	No	PART LIST
1	REAR AXLE	6	SHOCK ABSORBER
2	AIR BELLOW	7	TIE ROD
3	BOLT (M24x1,5x200-10,9)	8	NUT (M18x1,5-8,8)
4	HEXAGONAL NUT (M24x1,5-10,9)	9	NUT (SHOCK ABSORBER CONNECTION)
5	BOLT (M18x1,5)	10	STABILIZER ROD
11	LOWER ARM (CONTROL ARM)		
12	UPPER ARM (CONTROL ARM)		
13	BRAKE CHAMBER		

4. TROUBLESHOOTING

FAULT / CAUSE		Oil leaking from companion flange	Oil leaking from axle shaft	Oil leaking from differential carrier and axle housing	Power Transmission Failure							
					Tires drag during concerning	Noise when starting and gearshifting	Continuous noise while cruising	Intermittent noise while cruising	Noise during cornering	Shaft turns but vehicle not move	Damage	Seizure
Wheel hub bearing broken	Axle Housing and Wheel Hub							X				
Wheel hub bearing seized, worn or binding							X					
Axle shaft slips out of engagement or fractured										X		
Axle housing bent or Axle shaft bend							X					
Axle shaft mounting bolt loose			X					X				
Air bleeder cracked, damaged, plugged			X									
Oil seal faulty			X									
Side bearing starting torque too little	Differential and Reduction					X	X		X		X	
Side bearing starting torque too much							X					X
Side bearing broken								X				
Side bearing binding, worn or seized							X		X			
Gear oil too much or Oil seal faulty		X										
Gear oil too little						X	X					
Sealant faulty				X								
Reduction and differential assembly mounting bolt loose				X								
Reduction gear backlash too large						X					X	
Reduction gear and differential case tightening bolt loose						X		X				
Reduction gear or reduction pinion worn							X		X			
Reduction gear or reduction pinion broken						X		X	X	X		
Reduction gear or reduction pinion damaged							X					
Differential carrier cracked, damaged				X								
Differential carrier and bearing cap mounting bolt loose								X				
Pinion spider broken										X		
Differential gear or differential pinion broken					X			X	X	X		
Differential gear or differential pinion seized					X					X		
Differential gear or differential pinion worn					X				X			
Differential gear washer worn, broken					X			X	X			
Differential gear backlash too small									X			X
Reduction pinion assembly starting torque too little or Reduction lock nut loose						X	X					

08 FRONT SUSPENSION

Rev.00 / 25.03.14

1. TOOLS **2**

2. ON VEHICLE ADJUSTMENT AND INSPECTION **3**

3. SERVICE PROCEDURE **4**

3.1. Exploded View Of The Front Suspension 4

3.2. Exploded View Of The Suspension Element 5

3.3. Installation Of The Suspension Element 5

4. TROUBLESHOOTING **6**

GENERAL

- If work is performed by people who do not have the necessary training to carry out the work or if this information is handled carelessly or totally ignored, this may result in severe injury and/or death. Inaddition, serious damage to the vehicle may occur.
- Always read the safety instructions in full before starting certain operations. The safety instructions stipulate which aspects must be considered to achieve maximum safety. The information is given that is very important for health and safety.
- Always work in adequately ventilated rooms with sufficient lighting, free from dirt and clutter. Never leave tools or parts lying around, keep away from (high-) voltage sources that present a risk of short-circuiting. Always wear protective clothing. Do not wear any damaged or loose-fitting clothing and remove jewelry before starting the work. In case of long hair use hairnet.

1. TOOLS

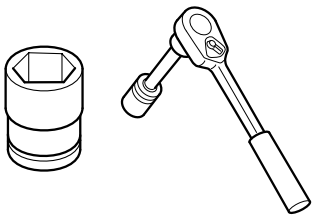 Impact Socket	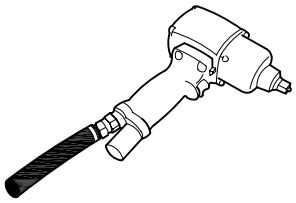 Impact Wrenches	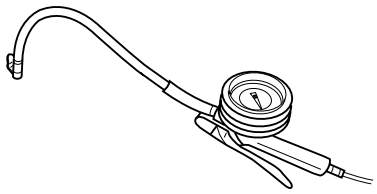 Tire Pressure Equipment
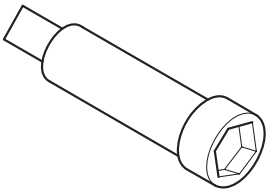 Short Arm		

2. ON VEHICLE ADJUSTMENT AND INSPECTION

Body Balancing

Before front-tire adjustment, you should apply the Body Balancing.

For Body Balancing:

1. Take vehicle on a flat place, road, etc.
2. Take the dimensions from the ground to the reference points.
3. For reaching the required dimensions use the suspension adjustment arms by screwing up or down. While adjusting the back side of the vehicle, left and right side does not differ from eachother, if left and right side do differ, always try to adjust the smaller value.

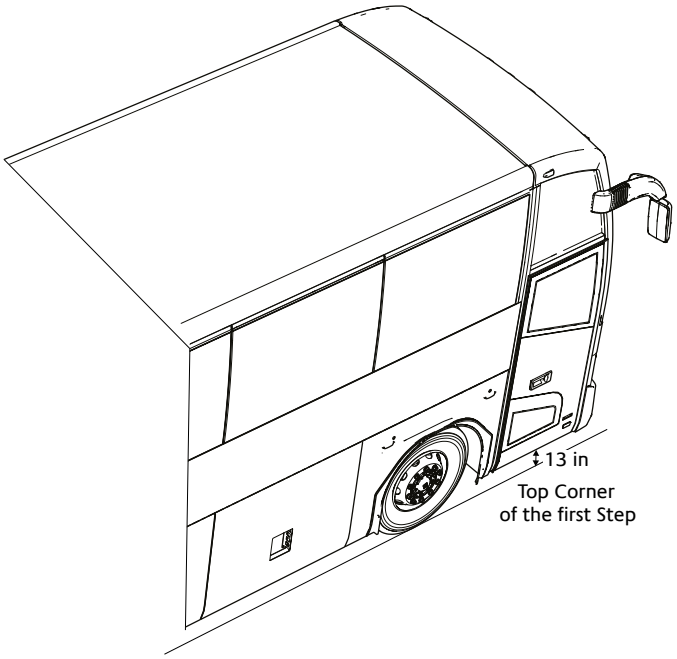

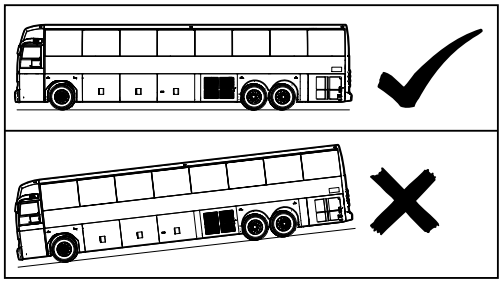

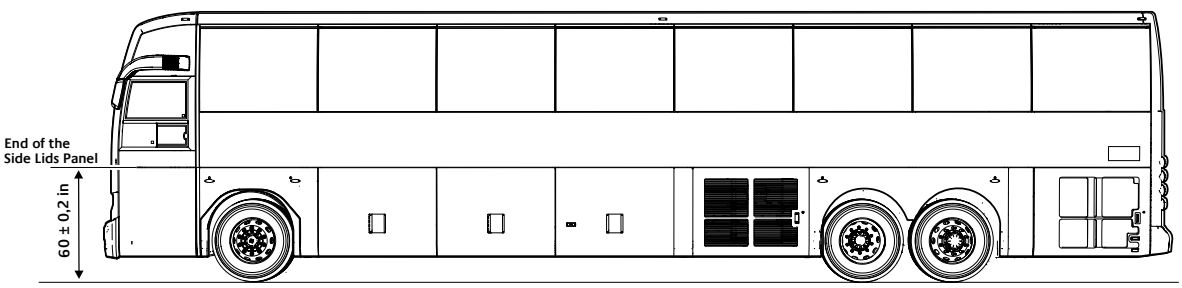

3. SERVICE PROCEDURE

3.1. EXPLODED VIEW OF THE FRONT SUSPENSION

Removal Sequence:

6 - 3 - 7 - 5 > 1
4 - 2

Note:
Installation sequence is reverse of the removal sequence.

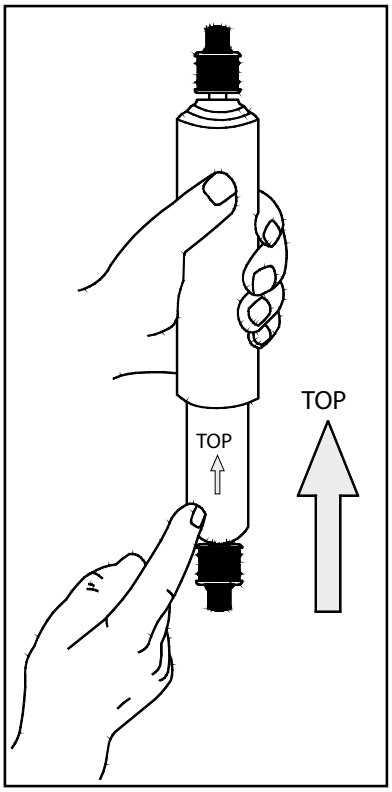

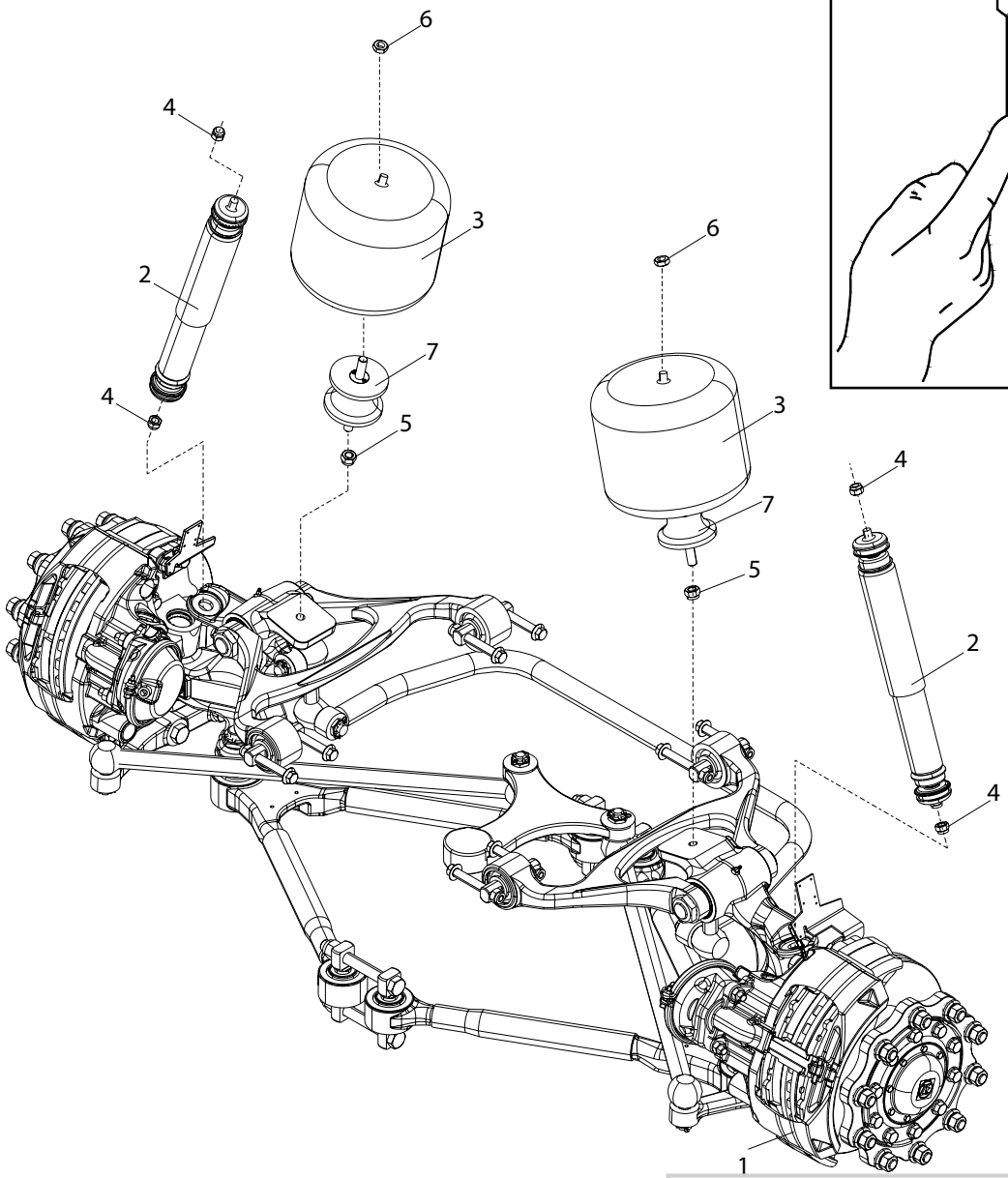

SYMBOL	TIGHTENING TORQUE
4 (NUT)	115,7-144,7 ftlbf
6 (NUT)	115,7-130,2 ftlbf

No	PART LIST	No	PART LIST
1	FRONT AXLE	5	NUT (M18x1.5-6.8)
2	SHOCK ABSORBER	6	NUT (M18x1.5-8.8)
3	BOOT	7	AIR SPRING BASE
4	SHOCK ABSORBER CONNECTION BOLT		

CAUTION

Care must be taken that the arrow always points upwards.

3.2. EXPLODED VIEW OF THE SUSPENSION ELEMENT

Air Bellows

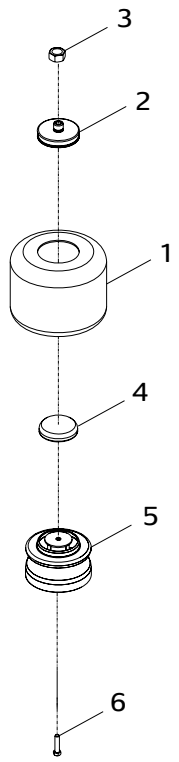

Removal Sequence:

6 - 3 - 5 - 4 - 2 > 1

Note: Installation sequence is reverse of the removal sequence.

SYMBOL	TIGHTENING TORQUE
3(NUT)	217 ft lbf
6(BOLT)	174 - 224 ft lbf

No	PART LIST
1	BOOT
2	SUSPENSION PLATE
3	NUT (M30)
4	CONNECTION PLATE
5	AIR SPRING BASE
6	BOLT (M18X2X60-8.8)

Shock absorber

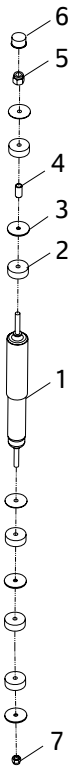

Removal Sequence:

6 - 5 - 3 - 2 - 4
7 - 3 - 2 - 4 >2

Note: Installation sequence is reverse of the removal sequence.

SYMBOL	TIGHTENING TORQUE
5 (NUT)	115,7 - 130 ft lbf

No	PART LIST
1	SHOCK ABSORBER
2	RUBBER PAD
3	SUPPORT PLATE
4	BUSHING
5	NUT
6	PROTECTIVE CAP
7	NUT

3.3. INSTALLATION OF THE SUSPENSION ELEMENT

Installation of the suspension is the reverse process of the removal process.

After re-install the air suspension system:

1. Check the condition of the air spring bellows.
2. Check the condition of the axle guidance.
3. Check the condition of the shockabsorbers and stabilizers.
4. Check the condition of the linkage on the level control valve
5. Check the settings of the air suspension height. There should be no body lean on a flat level surface, when the air spring bellows are inflated.
6. Check that all screw connections on the suspension and axle guidance, which have a safety function are tight and secure.

4. TROUBLESHOOTING

Symptoms / Causes	Air spring			Shock absorber			Leveling valve		Tire		
	Mounting height incorrect	Cracked diaphragm	Air lines loose or damaged at connections with components	Excessive oil leak, damping performance reduced	Rubber bushing worn	Loose fitting	Poor adjustment	Malfunction	Uneven wear	Unbalanced tires and wheels	Excessive tire pressure
Ride like floating				X							
Stiff cushion while driving	X		X				X	X			X
Noise tends to be generated when vehicle is loaded.											
Noise tends to be generated when vehicle is unloaded.					X	X					
Direct impact transmitted from uneven road surface	X						X	X			X
Excessive rolling while driving	X			X			X	X			
Periodic jolts received from road surface									X	X	
Excessive vertical vibration while driving				X			X	X			
Excessive air consum ption while driving		X	X								

09 REAR SUSPENSION

Rev.00 / 25.03.14

1. TOOLS **1**

2. ON VEHICLE ADJUSTMENT AND INSPECTION **2**

3. SERVICE PROCEDURE **3**

3.1. Exploded View Of The Rear Suspension 3

3.2. Exploded View Of The Suspension Element 5

3.3. Installation Of The Suspension Element 5

4. TROUBLESHOOTING **6**

GENERAL

- If work is performed by people who do not have the necessary training to carry out the work or if this information is handled carelessly or totally ignored, this may result in severe injury and/or death. Inaddition, serious damage to the vehicle may occur.
- Always read the safety instructions in full before starting certain operations. The safety instructions stipulate which aspects must be considered to achieve maximum safety. The information is given that is very important for health and safety.
- Always work in adequately ventilated rooms with sufficient lighting, free from dirt and clutter. Never leave tools or parts lying around, keep away from (high-) voltage sources that present a risk of short-circuiting. Always wear protective clothing. Do not wear any damaged or loose-fitting clothing and remove jewelry before starting the work. In case of long hair use hairnet.

1. TOOLS

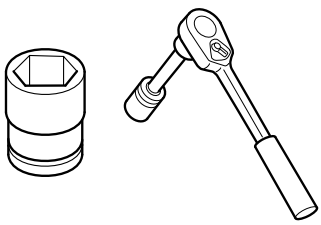	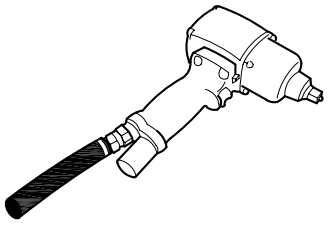	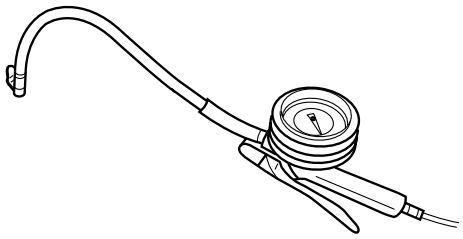
Impact Socket	Impact Wrenches	Tire Pressure Equipment

2. ON VEHICLE ADJUSTMENT AND INSPECTION

Body Balancing

Before rear-tire adjustment, you should apply the Body Balancing.

For Body Balancing:

1. Take vehicle on a flat place, road, etc.
2. Take the dimensions from the ground to the reference points.
3. For reaching the required dimensions use the suspension adjustment arms by screwing up or down. While adjusting the back side of the vehicle, left and right side is not differ from eachother, if left and right side is differ, allways try to adjust for the smaller value.

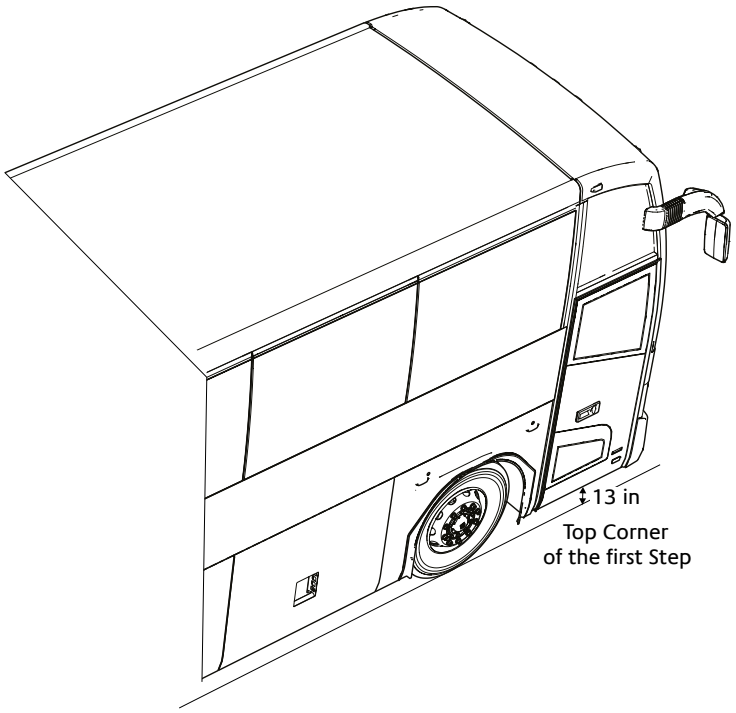

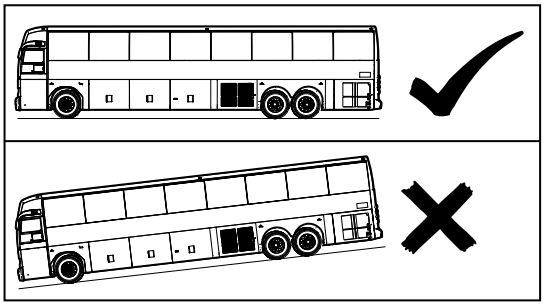

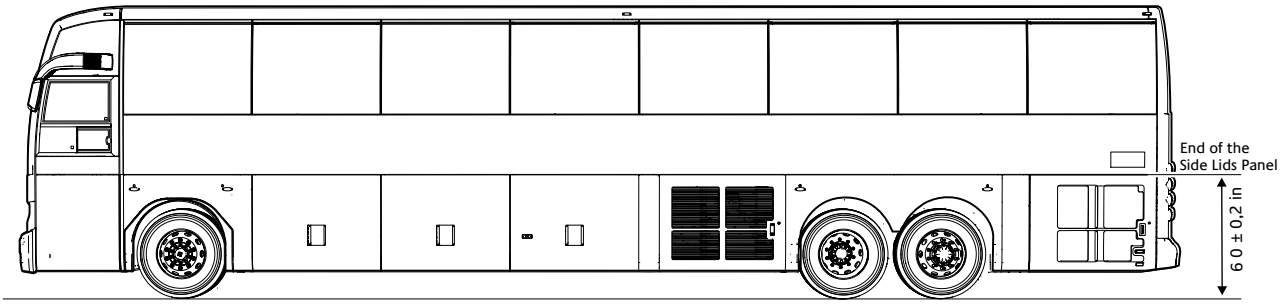

3. SERVICE PROCEDURE

3.1. EXPLODED VIEW OF THE REAR SUSPENSION

Removal Sequence :

12 - 11 > 7
22 - 20 - 21 > 19

Note:
Installationsequence is reverse of the removal sequence.

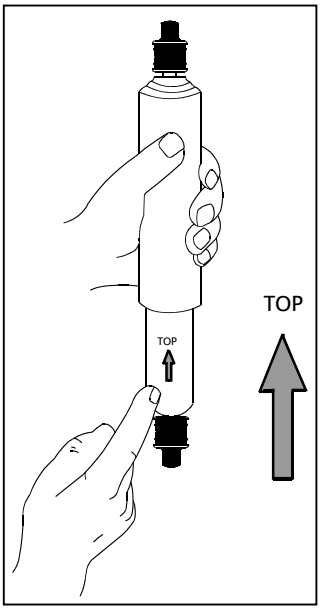

SYMBOL	TIGHTENING TORQUE
11 (NUT)	116-130 ft lbf
12 (NUT)	16-130 ft lbf
22 (NUT)	202,5-231,5 ft lbf

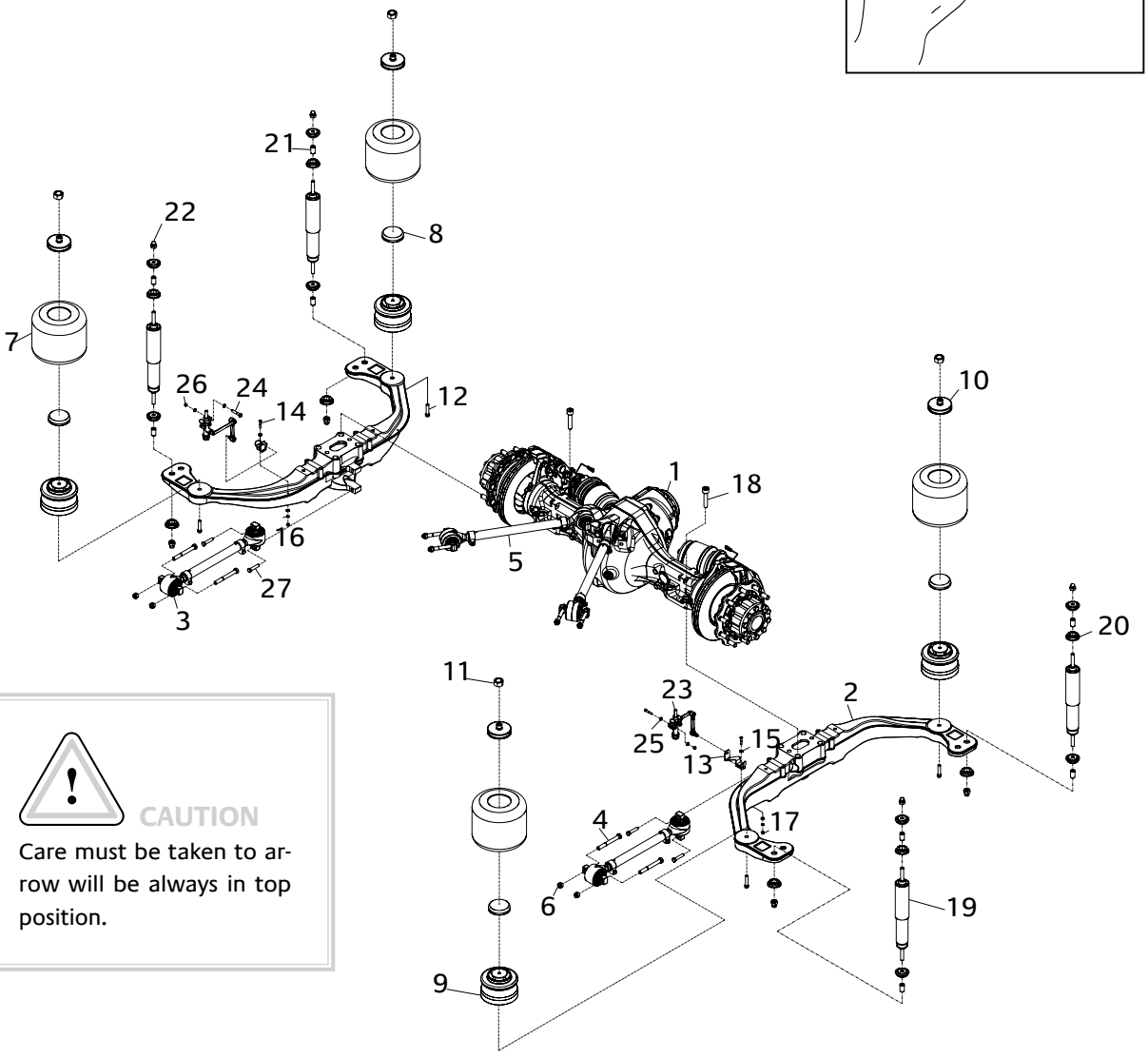

CAUTION
Care must be taken to arrow will be always in top position.

No	PART LIST	No	PART LIST	No	PART LIST	No	PART LIST	No	PART LIST
1	REAR AXLE ASSY.	7	BOOT	13	LEVELLING VALVE BRACKET	19	SHOCK ABSORBER	25	WASHER, PLAIN
2	BEAM SUPPORT	8	CONNECTION PLATE	14	BOLT(M8x1,25x40)	20	SUSPENSION PLATE	26	NUT
3	AXLE LOWER ARM	9	AIR SPRING BASE	15	WASHER, PLAIN	21	BUSHING	27	BOLT
4	BOLT(M18x2x160)	10	SUSPENSION PLATE	16	WASHER, SPRING	22	COLLAR NUT		
5	UPPER ARM	11	NUT(M30x1.5)	17	NUT	23	LEVELLING VALVE		
6	NUT	12	BOLT(M18x2x60)	18	BOLT	24	BOLT		

3.1. EXPLODED VIEW OF THE REAR SUSPENSION

Removal Sequence :

8 - 7 > 3
12 - 10 - 11 > 9

Note:
Installationsequence is reverse of the removal sequence.

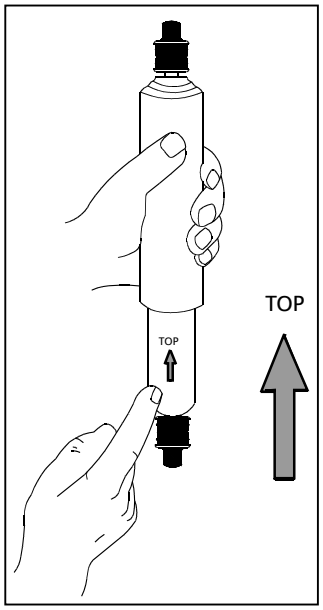

SYMBOL	TIGHTENING TORQUE
7 (NUT)	116-130 ft lbf
8 (NUT)	16-130 ft lbf
12 (NUT)	202,5-231,5 ft lbf

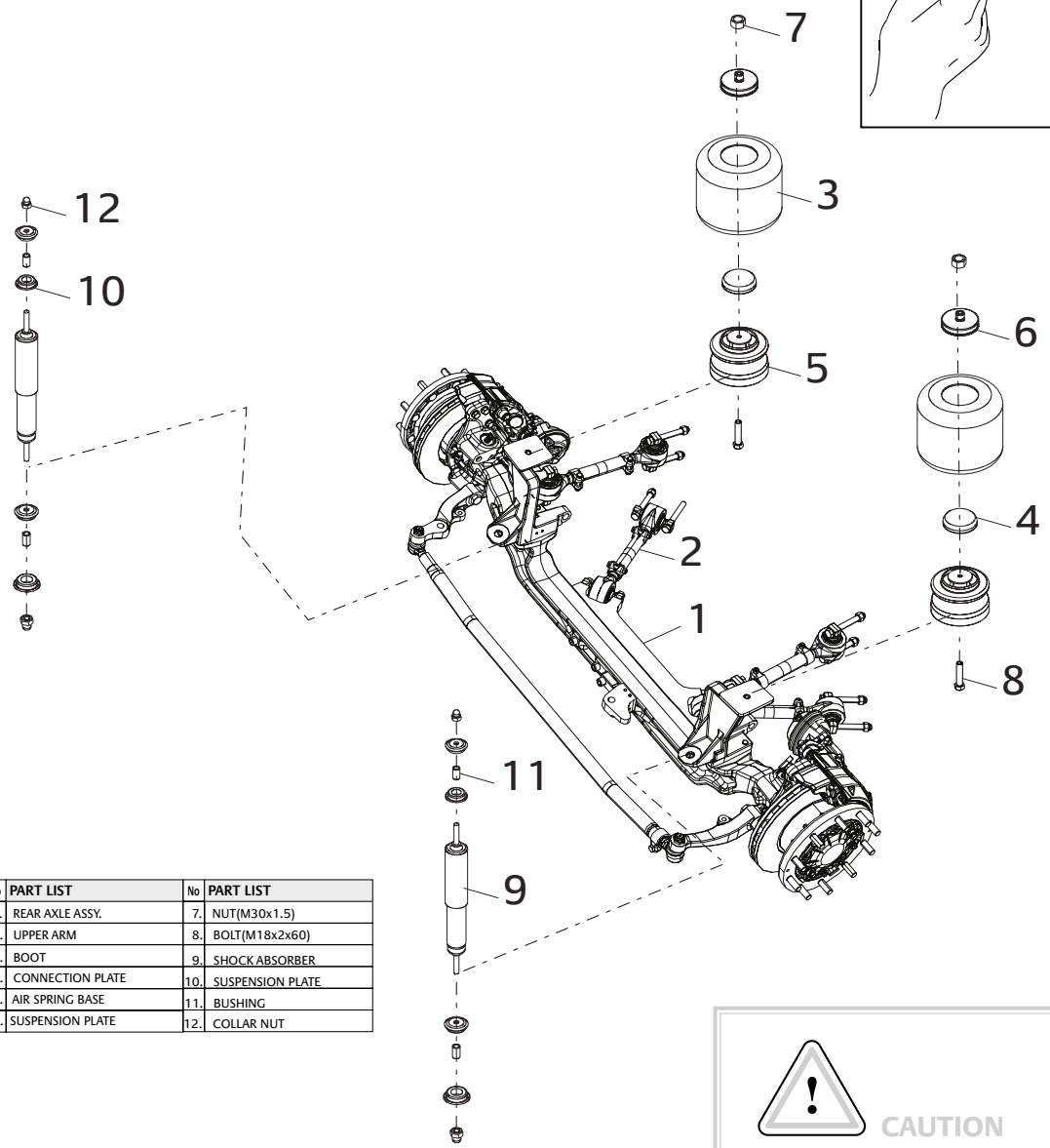

No	PART LIST	No	PART LIST
1.	REAR AXLE ASSY.	7.	NUT(M30x1.5)
2.	UPPER ARM	8.	BOLT(M18x2x60)
3.	BOOT	9.	SHOCK ABSORBER
4.	CONNECTION PLATE	10.	SUSPENSION PLATE
5.	AIR SPRING BASE	11.	BUSHING
6.	SUSPENSION PLATE	12.	COLLAR NUT

CAUTION
Care must be taken to arrow will be always in top position.

3.2. EXPLODED VIEW OF THE SUSPENSION ELEMENT

Air Bellows

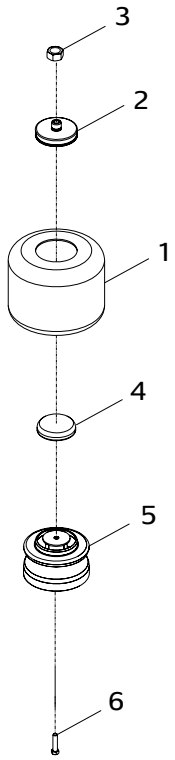

Removal Sequence:

6 - 3 - 5 - 4 - 2 > 1

Note: Installation sequence is reverse of the removal sequence.

SYMBOL	TIGHTENING TORQUE
3 (NUT)	217 ftlbf
6 (BOLT)	174-224 ftlbf

No	PART LIST
1	BOOT
2	SUSPENSION PLATE
3	NUT (M30)
4	CONNECTION PLATE
5	AIR SPRING BASE
6	BOLT (M18X2X60-8.8)

Shockabsorber

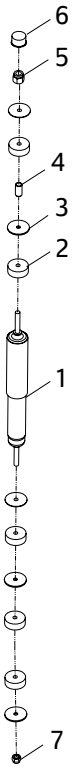

Removal Sequence:

6 - 5 - 3 - 2 - 4
7 - 3 - 2 - 4 > 2

Note: Installation sequence is reverse of the removal sequence.

SYMBOL	TIGHTENING TORQUE
5 (NUT)	116-130 ftlbf

No	PART LIST
1	SHOCK ABSORBER
2	RUBBER PAD
3	SUPPORT PLATE
4	BUSHING
5	NUT
6	PROTECTIVE CAP
7	NUT

3.3. INSTALLATION OF THE SUSPENSION ELEMENT

Installation of the suspension is the reverse process of the removal process.

After re-install the air suspension system:

1. Check the condition of the air spring bellows.
2. Check the condition of the axle guidance.
3. Check the condition of the shockabsorbers and stabilizers.
4. Check the condition of the linkage on the level control valve
5. Check the settings of the air suspension height. There should be no body lean on a flat level surface, when the air spring bellows are inflated.
6. Check that all screw connections on the suspension and axle guidance, which have a safety function are tight and secure.

4. TROUBLESHOOTING

Symptoms / Causes	Air spring			Shock absorber			Leveling valve		Tire		
	Mounting height incorrect	Cracked diaphragm	Air lines loose or damaged at connections with components	Excessive oil leak, damping performance reduced	Rubber bushing worn	Loose fitting	Poor adjustment	Malfunction	Uneven wear	Unbalanced tires and wheels	Excessive tire pressure
Ride like floating				X							
Stiff cushion while driving	X		X				X	X			X
Noise tends to be generated when vehicle is loaded.											
Noise tends to be generated when vehicle is unloaded.					X	X					
Direct impact transmitted from uneven road surface	X						X	X			X
Excessive rolling while driving	X			X			X	X			
Periodic jolts received from road surface									X	X	
Excessive vertical vibration while driving				X			X	X			
Excessive air consum ption while driving		X	X								

10 PROP SHAFT

Rev.00 / 25.03.14

1. TOOLS 2

2. SERVICE PROCEDURE 3

2.1. Removing The Prop Shaft 3

2.2. Installation Of Propeller Shaft 3

2.3. Exploded View Of Prop Shaft 4

3. TROUBLESHOOTING 5

GENERAL

- If work is performed by people who do not have the necessary training to carry out the work or if this information is handled carelessly or totally ignored, this may result in severe injury and/or death. Inaddition, serious damage to the vehicle may occur.
- Always read the safety instructions in full before starting certain operations. The safety instructions stipulate which aspects must be considered to achieve maximum safety. The information is given that is very important for health and safety.
- Always work in adequately ventilated rooms with sufficient lighting, free from dirt and clutter. Never leave tools or parts lying around, keep away from (high-) voltage sources that present a risk of short-circuiting. Always wear protective clothing. Do not wear any damaged or loose-fitting clothing and remove jewelry before starting the work. In case of long hair use hairnet.

1. TOOLS

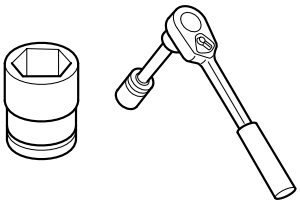 Impact Socket	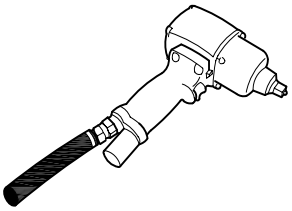 Impact Wrenches	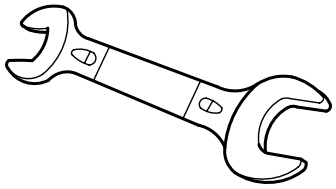 Open Wrench Double Ended
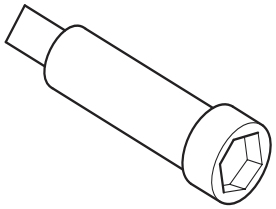 Short Arm	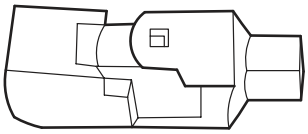 Universal Joint	 Torque Wrench 200 Nm

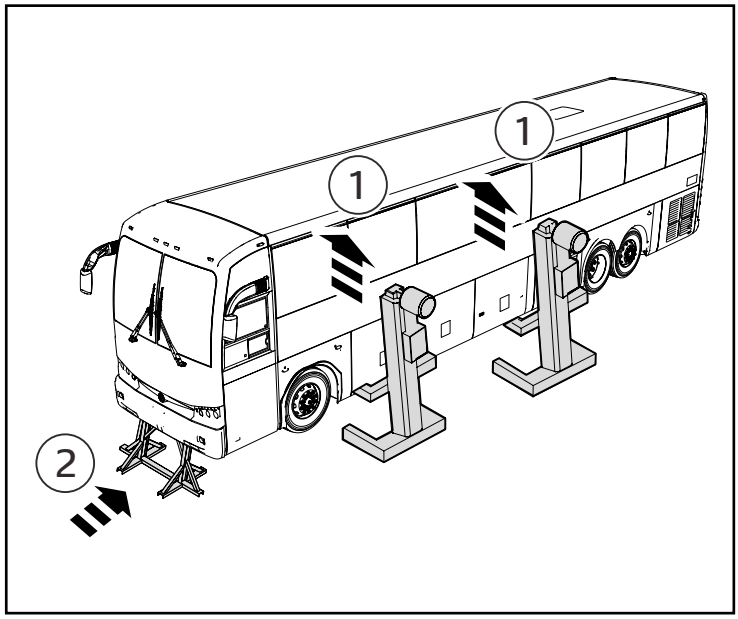

2. SERVICE PROCEDURE

2.1. REMOVING THE PROP SHAFT

1. Lift up the vehicle with the lifting jack.
2. Support the frame by rigid rack after lifting bus.

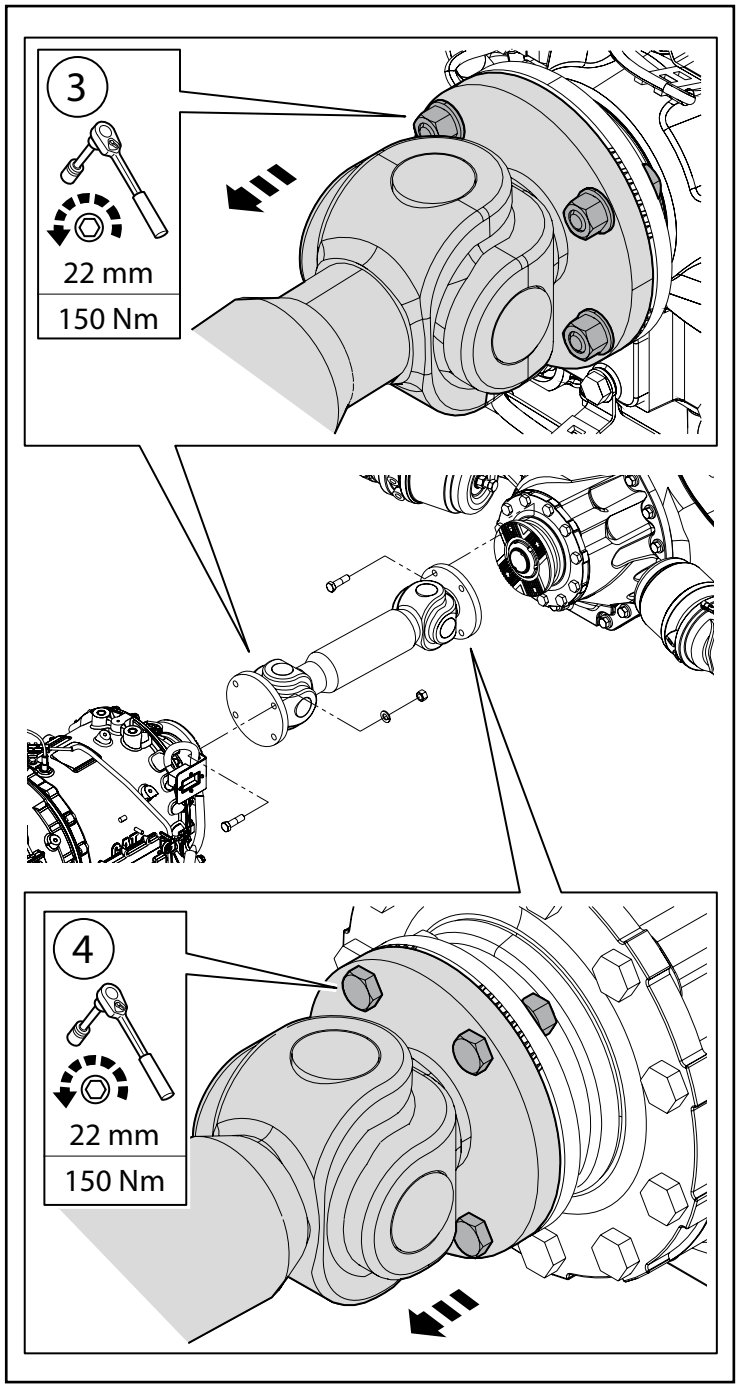

3. Remove the transmission connection nuts from propeller shaft, then remove the propeller shaft from the transmission.

WARNING

After removal of the propeller shaft, place gearbox in a neutral position.

4. Remove the rear axle connection bolts from propeller shaft, then remove the propeller shaft from the rear axle.

2.2. INSTALLATION OF PROPELLER SHAFT

1. Installation sequence is the reverse order of removal sequence.

2.3. EXPLODED VIEW OF PROP SHAFT

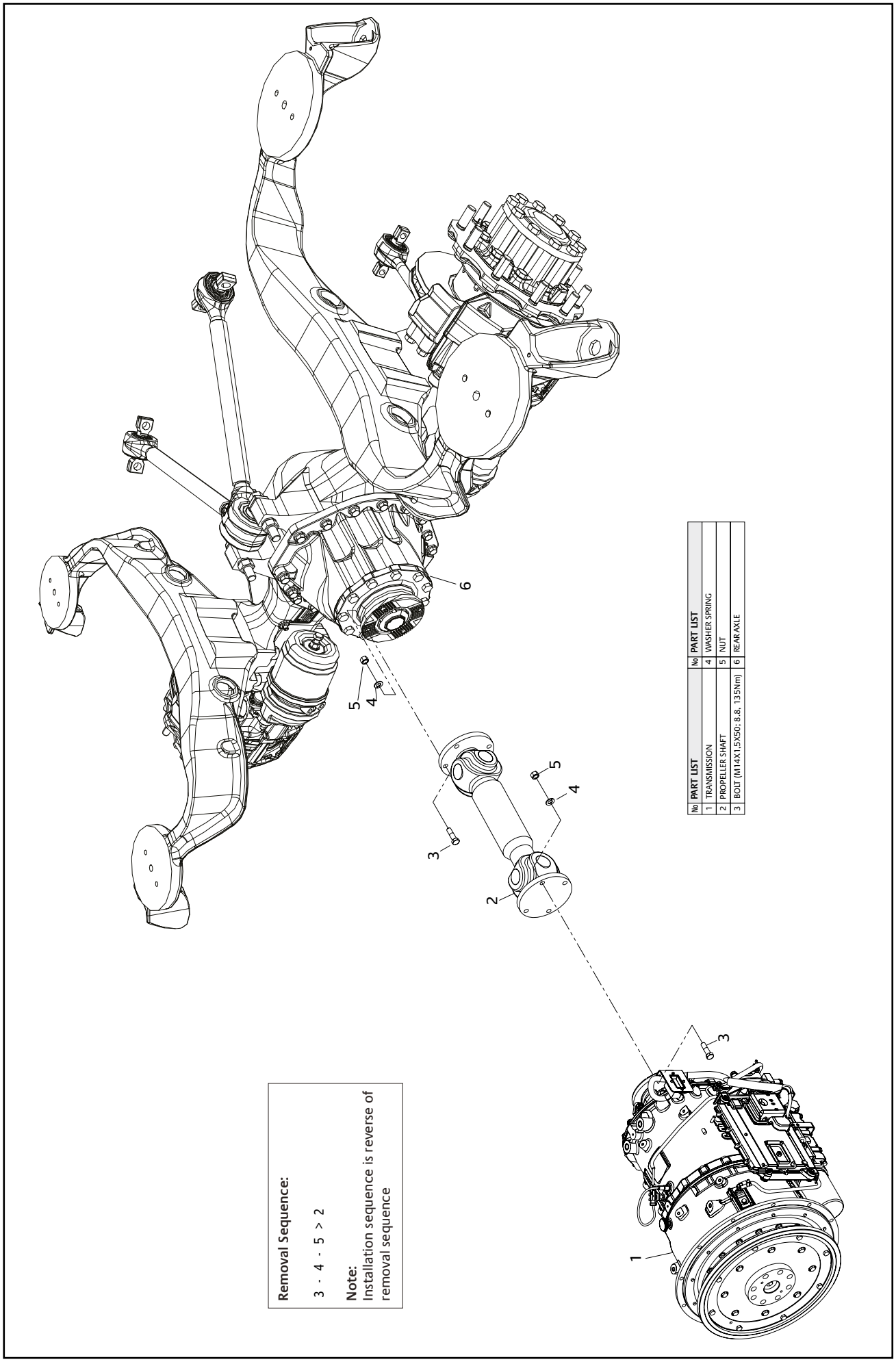

3. TROUBLESHOOTING

FAULT \ CAUSE	Axial clearance in universal joint spider excessive	Slip yoke joint lubrication insufficent	Slip yoke joint spline play excessive	Transmission gear selection too high	Propeller shaft dynamic balance adjusted incorrectly	Propeller shaft bent	Propeller shaft mounting bolt loose	Universal joint needle bearing worn	Universal joint needle lubricated insufficiently	Flange yoke assembly direction incorrect
Gear slip out of engagement					X	X	X	X		X
Hard shifting into gear	X		X	X						
Noise when engine idles			X				X	X		
Noise while cruising	X	X						X	X	

11 PEDALS

Rev.00 / 25.03.14

1. TOOLS **1**
2. SERVICE PROCEDURE **2**
2.1. Exploded View Of The Pedals 2

GENERAL

- If work is performed by people who do not have the necessary training to carry out the work or if this information is handled carelessly or totally ignored, this may result in severe injury and/or death. Inaddition, serious damage to the vehicle may occur.
- Always read the safety instructions in full before starting certain operations. The safety instructions stipulate which aspects must be considered to achieve maximum safety. The information is given that is very important for health and safety.
- Always work in adequately ventilated rooms with sufficient lighting, free from dirt and clutter. Never leave tools or parts lying around, keep away from (high-) voltage sources that present a risk of short-circuiting. Always wear protective clothing. Do not wear any damaged or loose-fitting clothing and remove jewelry before starting the work. In case of long hair use hairnet.

1. TOOLS

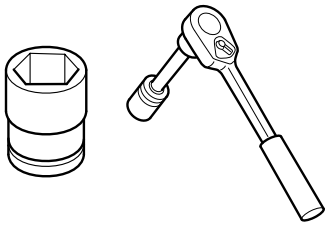	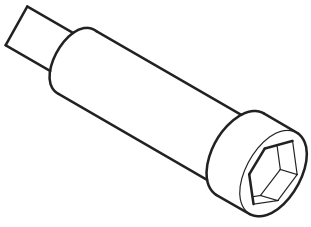	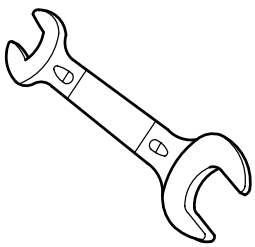
Impact Socket	Short Arm	Open Wrench Double Ended

2. SERVICE PROCEDURE
2.1. EXPLODED VIEW OF THE PEDALS

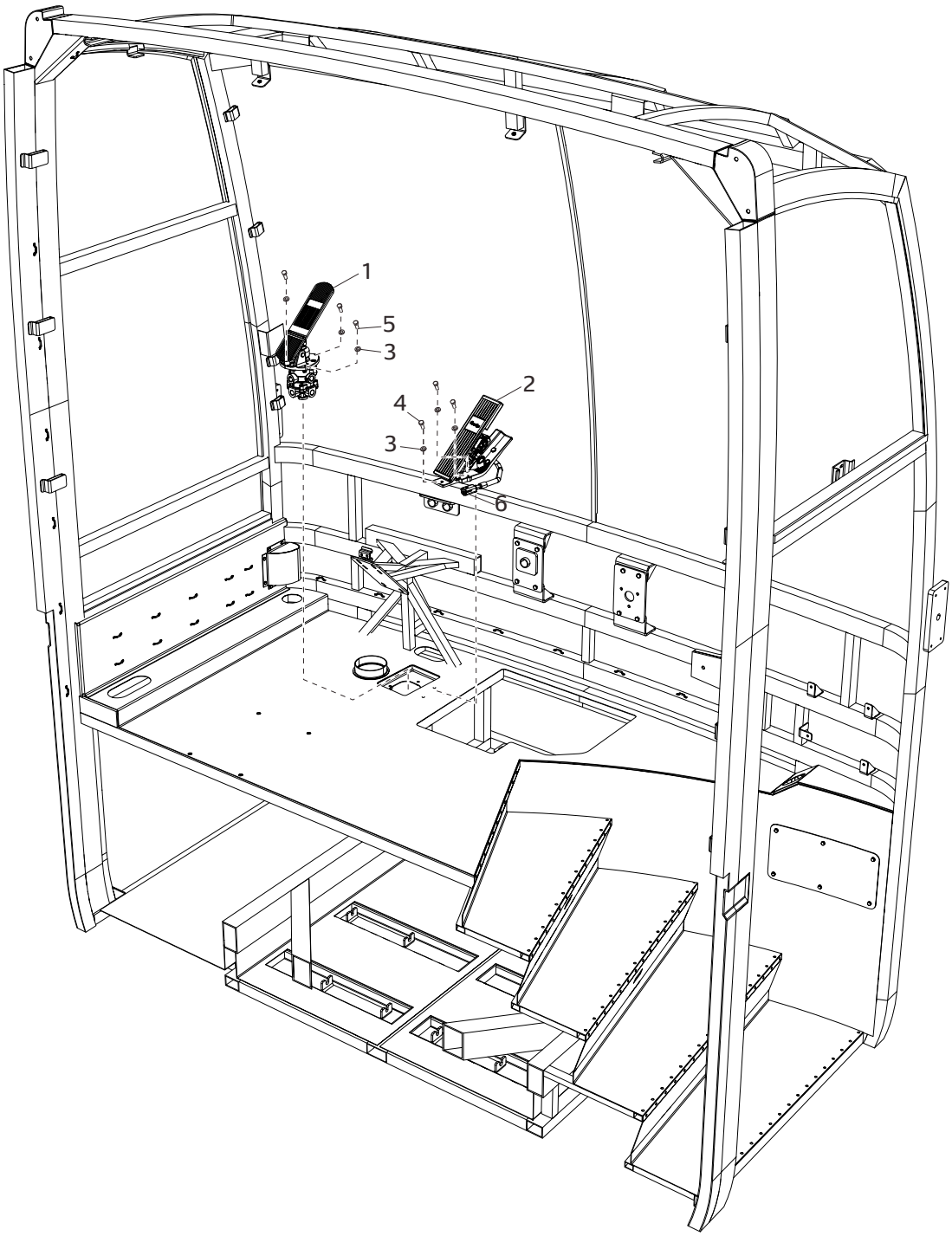

Removal Sequence:

3 - 4
6 > 2

3 - 5 > 1

Note:
Installation sequence is reverse of removal sequence

No	PART LIST
1.	BRAKE PEDAL
2.	ACCELERATOR PEDAL
3.	WASHER SPRING
4.	BOLT
5.	BOLT
6.	SWITCH

12 BRAKE

Rev.00 / 25.03.14

1. TOOLS 1

2. SERVICE PROCEDURE 2

2.1. Removing the Brake Pads 2

2.2. Removing the Brake Unit 4

GENERAL

- If work is performed by people who do not have the necessary training to carry out the work or if this information is handled carelessly or totally ignored, this may result in severe injury and/or death. Inaddition, serious damage to the vehicle may occur.
- Always read the safety instructions in full before starting certain operations. The safety instructions stipulate which aspects must be considered to achieve maximum safety. The information is given that is very important for health and safety.
- Always work in adequately ventilated rooms with sufficient lighting, free from dirt and clutter. Never leave tools or parts lying around, keep away from (high-) voltage sources that present a risk of short-circuiting. Always wear protective clothing. Do not wear any damaged or loose-fitting clothing and remove jewelry before starting the work. In case of long hair use hairnet.

1. TOOLS

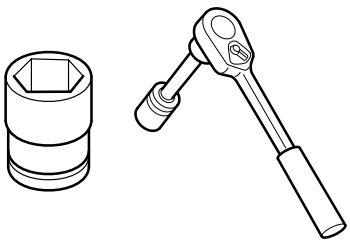 Impact Socket	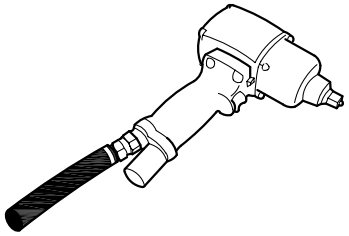 Impact Wrenches	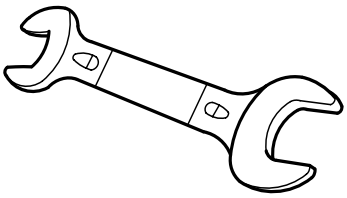 Open Wrench Double Ended
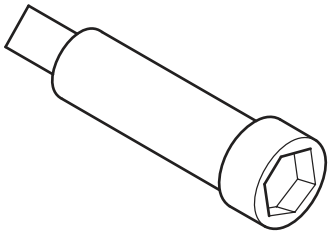 Short Arm		

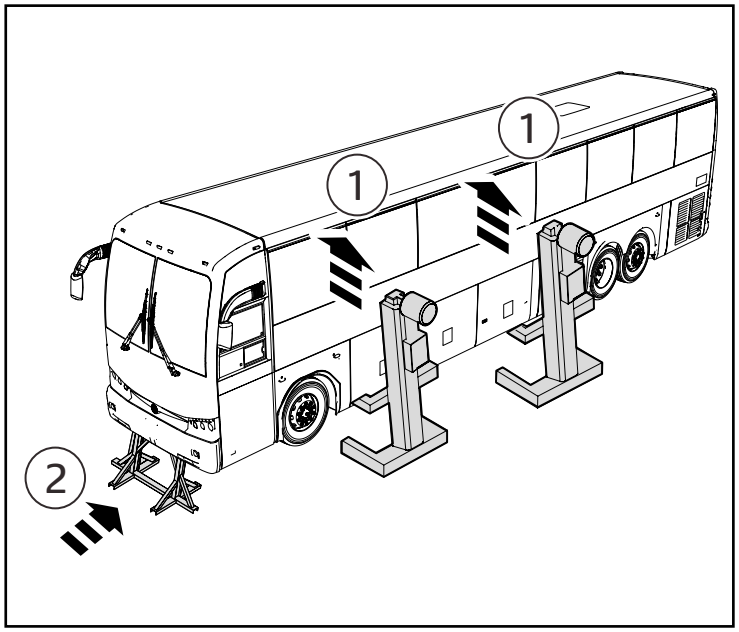

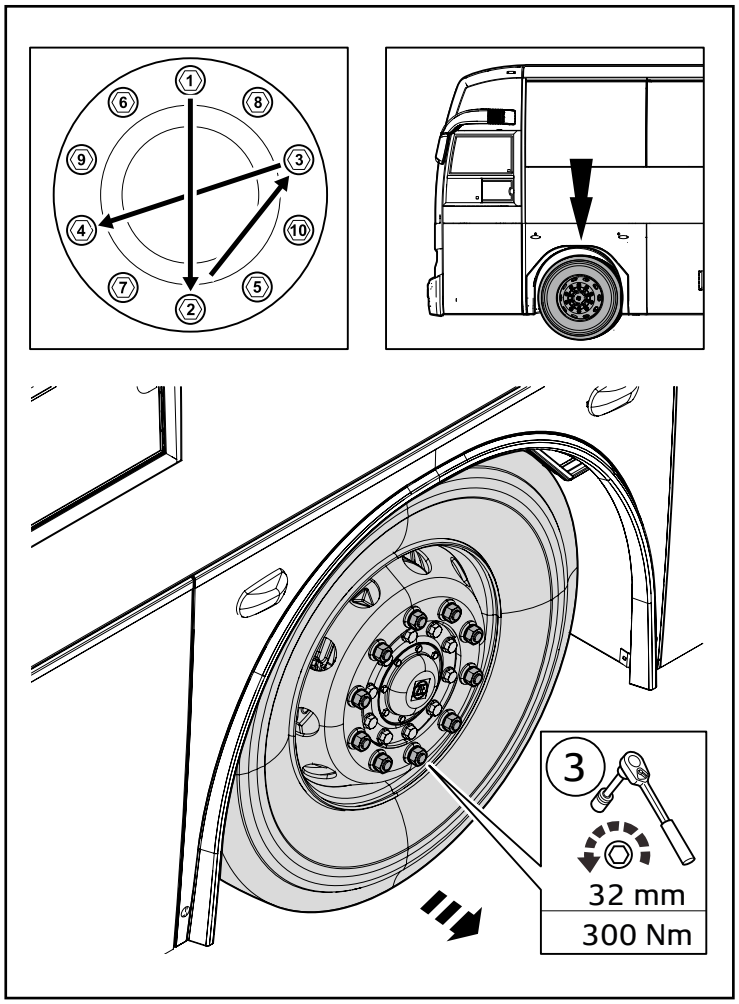

2. SERVICE PROCEDURE

2.1. REMOVING THE BRAKE PADS

1. Lift the vehicle with lifting jack.
2. Support the frame with rigid rack after lifting bus.

WARNING

- Jacking points are clearly marked on the front and rear of vehicle.
- Leave the jack and rigid racks in place until the entire operation is completed.
- Never remove jack and rigid rack during the operation.
- Never jack up on soft ground.

CAUTION

- Always perform the following procedure on flat surface!
- Check tire pressure.

WARNING

Set the socket wrench fully over the wheel nut, otherwise the wrench could disengage from the nut.

3. Screw off the wheel nuts in a crosswise pattern using a socket wrench and take off the wheel, take care not to damage the wheel stud threads.

2.1. REMOVING THE BRAKE PADS

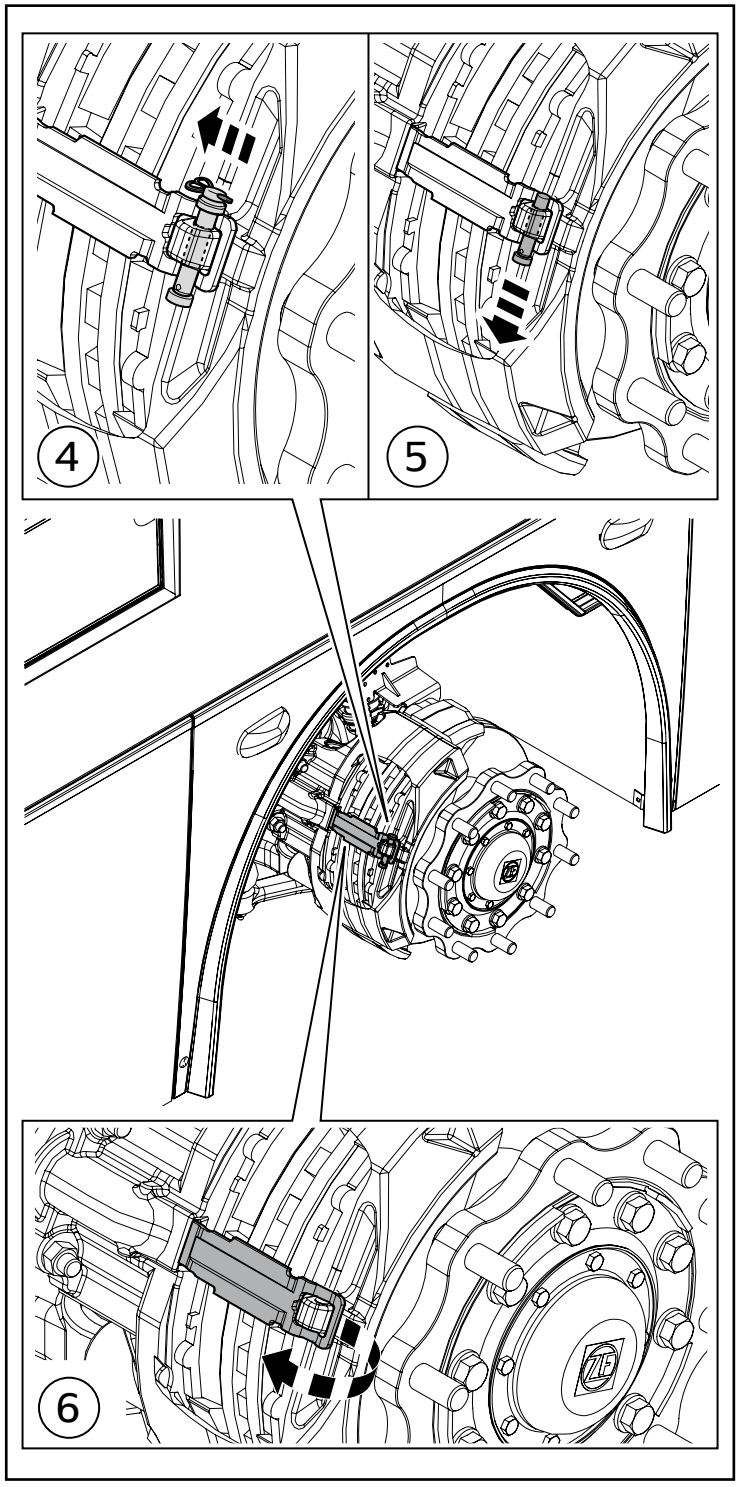

4. Remove the split pin.
5. Remove pin.

6. Pull out bracket.

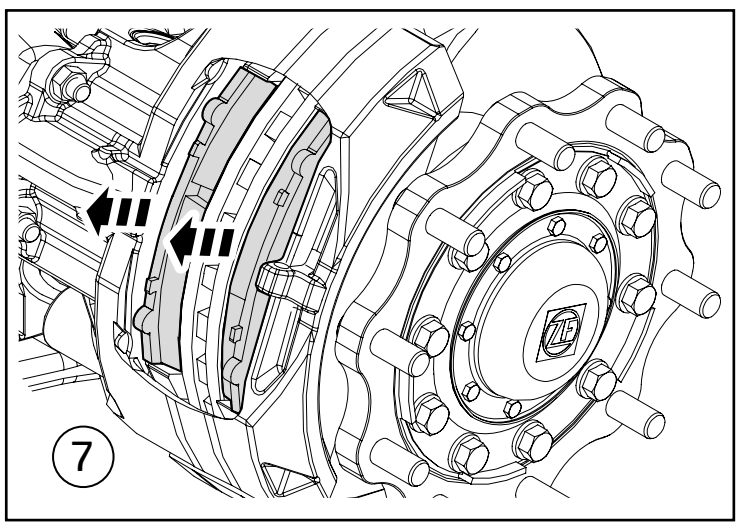

7. Remove brake pads.

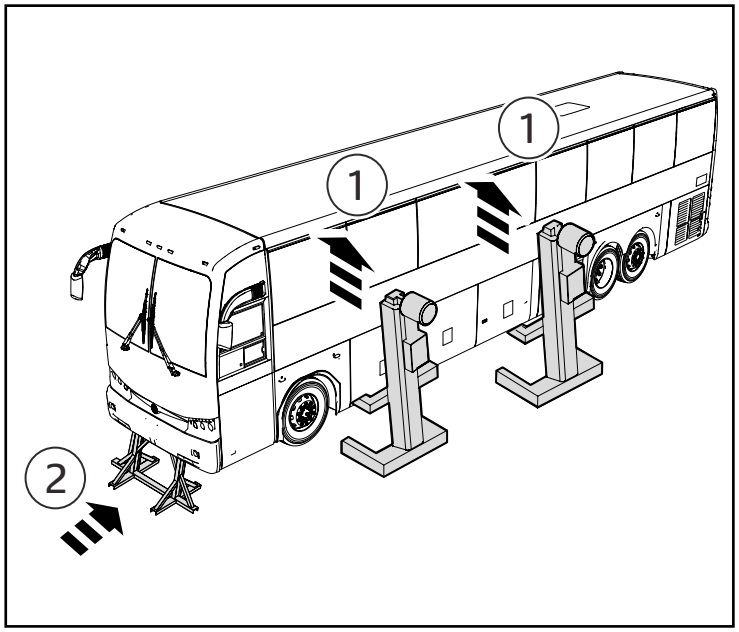

2.2. REMOVING THE BRAKE UNIT

1. Lift the vehicle with lifting jack.
2. Support the frame with rigid rack after lifting bus.

WARNING

- Jacking points are clearly marked on the front and rear of vehicle.
- Leave the jack and rigid racks in place until the entire operation is completed.
- Never remove jack and rigid rack during the operation.
- Never jack up on soft ground.

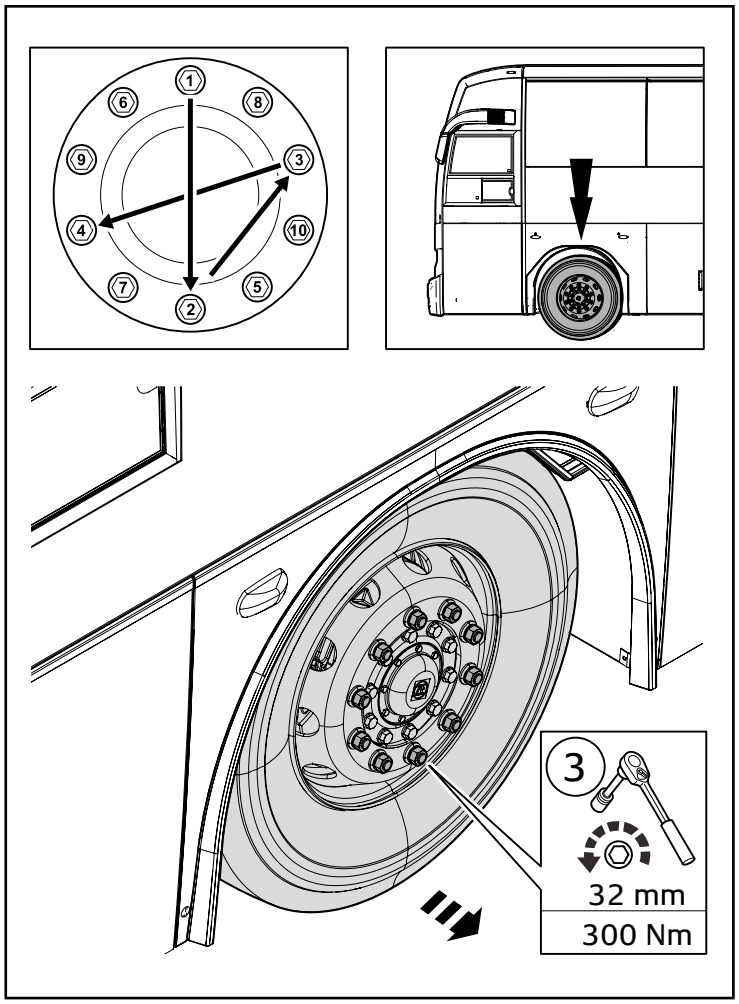

CAUTION

- Always perform the following procedure on flat surface!
- Check tire pressure.

WARNING

Set the socket wrench fully over the wheel nut, otherwise the wrench could disengage from the nut.

3. Screw off the wheel nuts in a crosswise pattern using a socket wrench and take off the wheel, take care not to damage the wheel stud threads.

2.2. REMOVING THE BRAKE UNIT

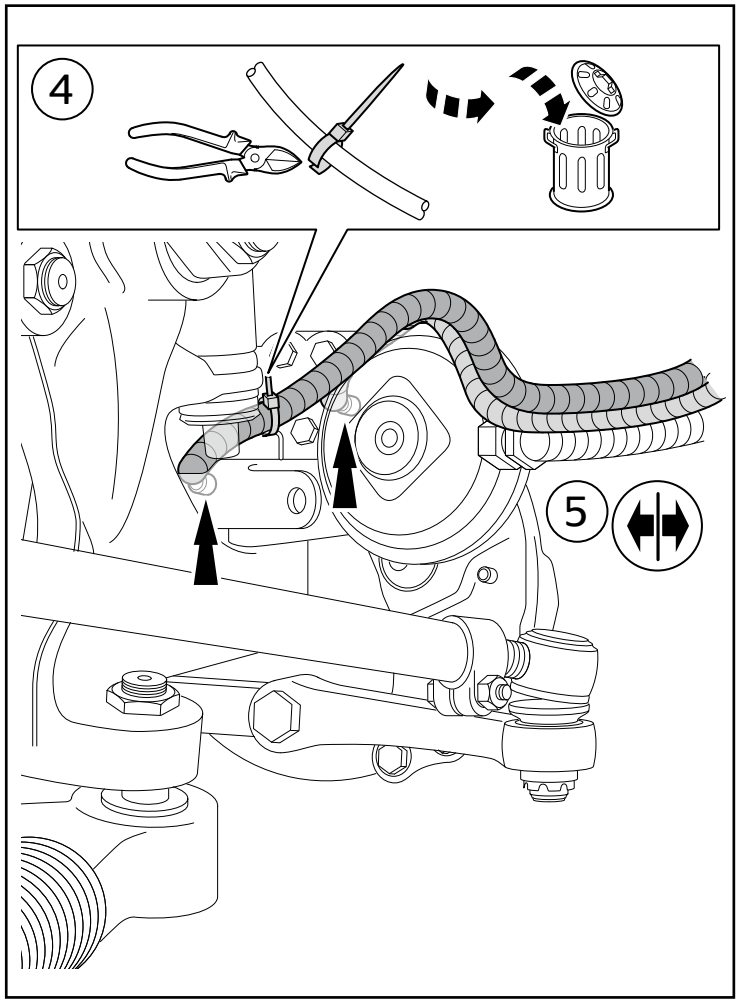

4. Cut off tie wrap and throw away.
5. Remove ABS and brake sensors connections.

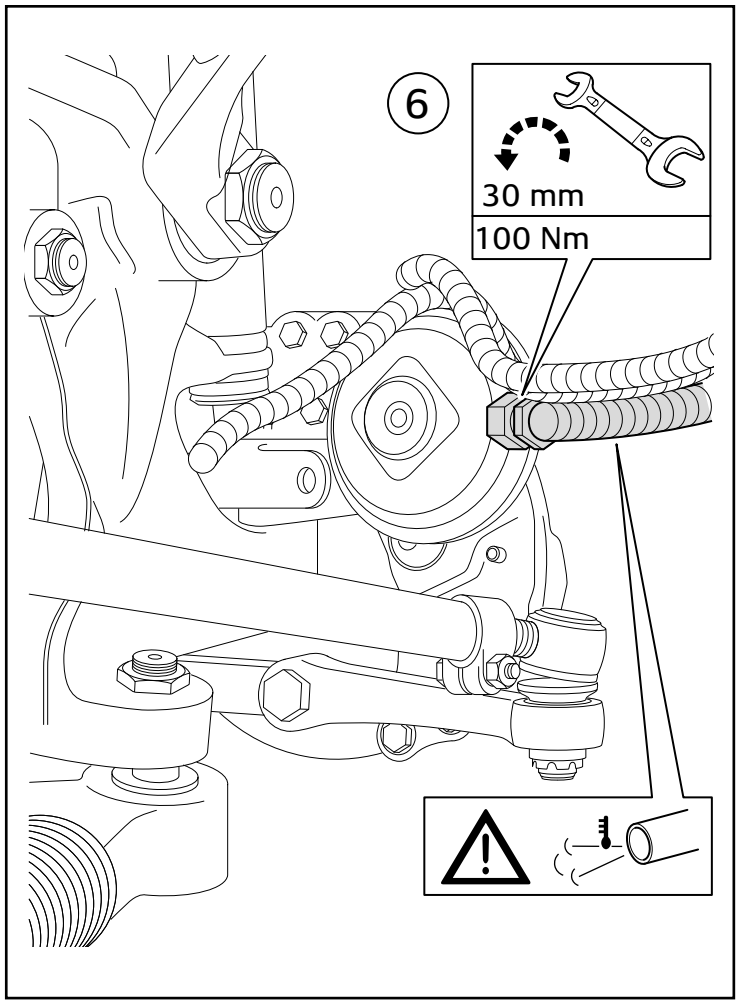

6. Remove the brake hose connections and release air pressure.

> **WARNING**
> Unscrew slowly due to risk of pressurized air leaking!

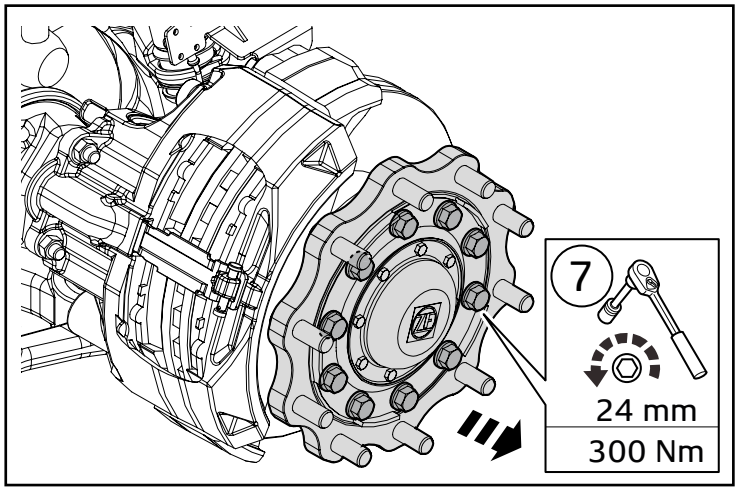

2.2. REMOVING THE BRAKE UNIT

7. Unscrew the 10 bolts of mounting plate and remove mounting plate from the axle.

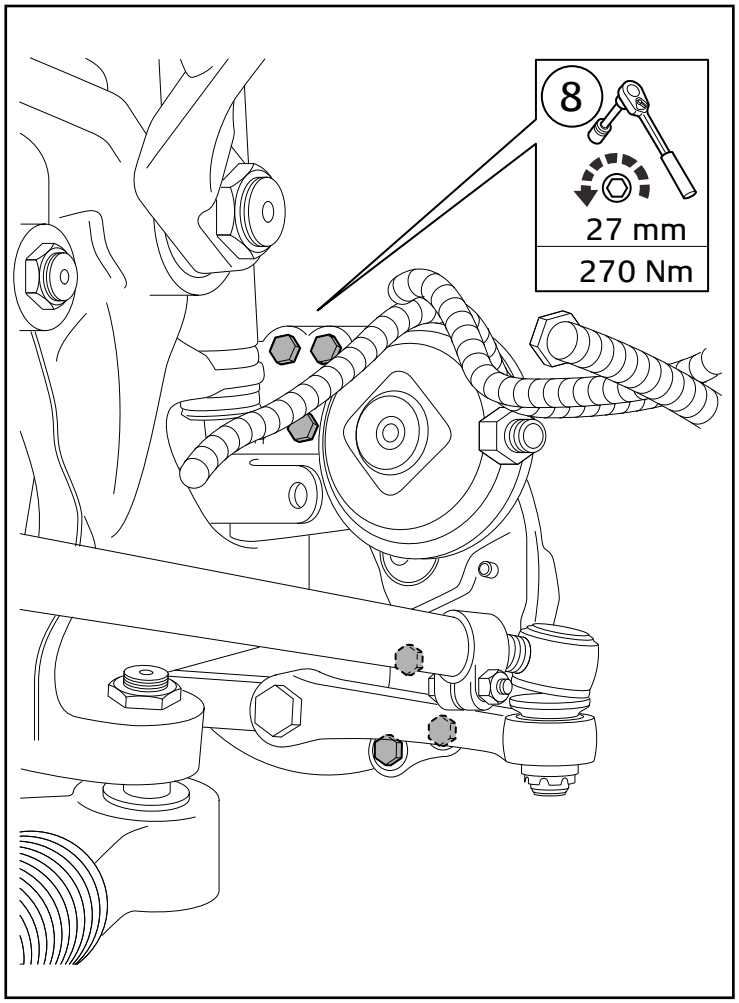

8. Unscrew the 6 bolts of the brake unit.

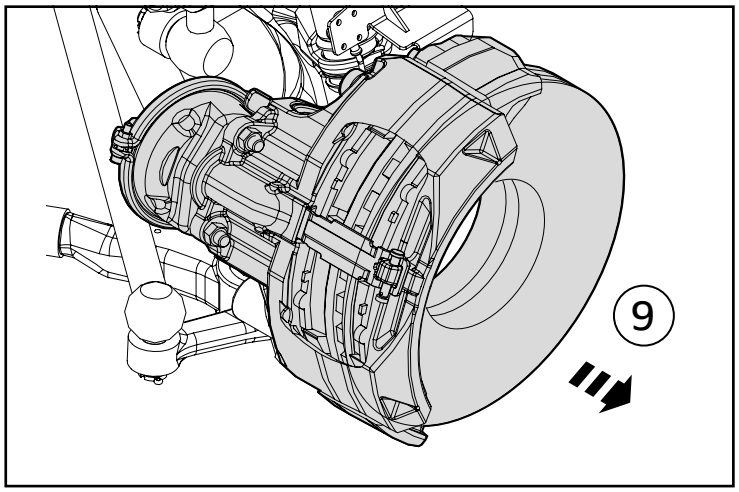

9. Remove brake unit.

13 STEERING

Rev.00 / 25.03.14

1. TOOLS **2**
2. STRUCTURE AND OPERATION **3**
2.1. Steering 3
3. SERVICE PROCEDURE **4**
3.1. Exploded View Of The Steering System 4
3.2. Exploded View Of The Steering Hydraulic Oil Pipes 5
4. TROUBLESHOOTING **6**

GENERAL

- If work is performed by people who do not have the necessary training to carry out the work or if this information is handled carelessly or totally ignored, this may result in severe injury and/or death. Inaddition, serious damage to the vehicle may occur.
- Always read the safety instructions in full before starting certain operations. The safety instructions stipulate which aspects must be considered to achieve maximum safety. The information is given that is very important for health and safety.
- Always work in adequately ventilated rooms with sufficient lighting, free from dirt and clutter. Never leave tools or parts lying around, keep away from (high-) voltage sources that present a risk of short-circuiting. Always wear protective clothing. Do not wear any damaged or loose-fitting clothing and remove jewelry before starting the work. In case of long hair use hairnet.

1. TOOLS

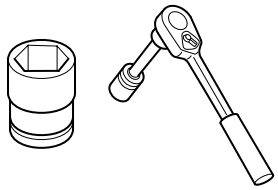 Impact Socket	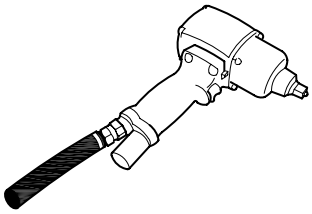 Impact Wrenches	 Hexagonal Keys 5
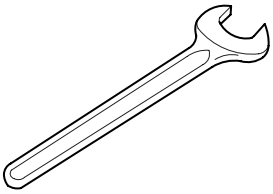 Open Wrench		

2. STRUCTURE AND OPERATION

2.1. STEERING

The steering system permits the driver to change the vehicle's direction when the steering force is applied to the steering wheel. The wheel transmits that force with steering rod, drag linkage, steering gear box and pitman arm to the front wheels of the vehicle.

The TS35 ft. bus is equipped with a power steering that uses hydraulic pressure generated by the oil pump driven by the engine so that the steering effort is reduced. General illustration of steering system is shown below.

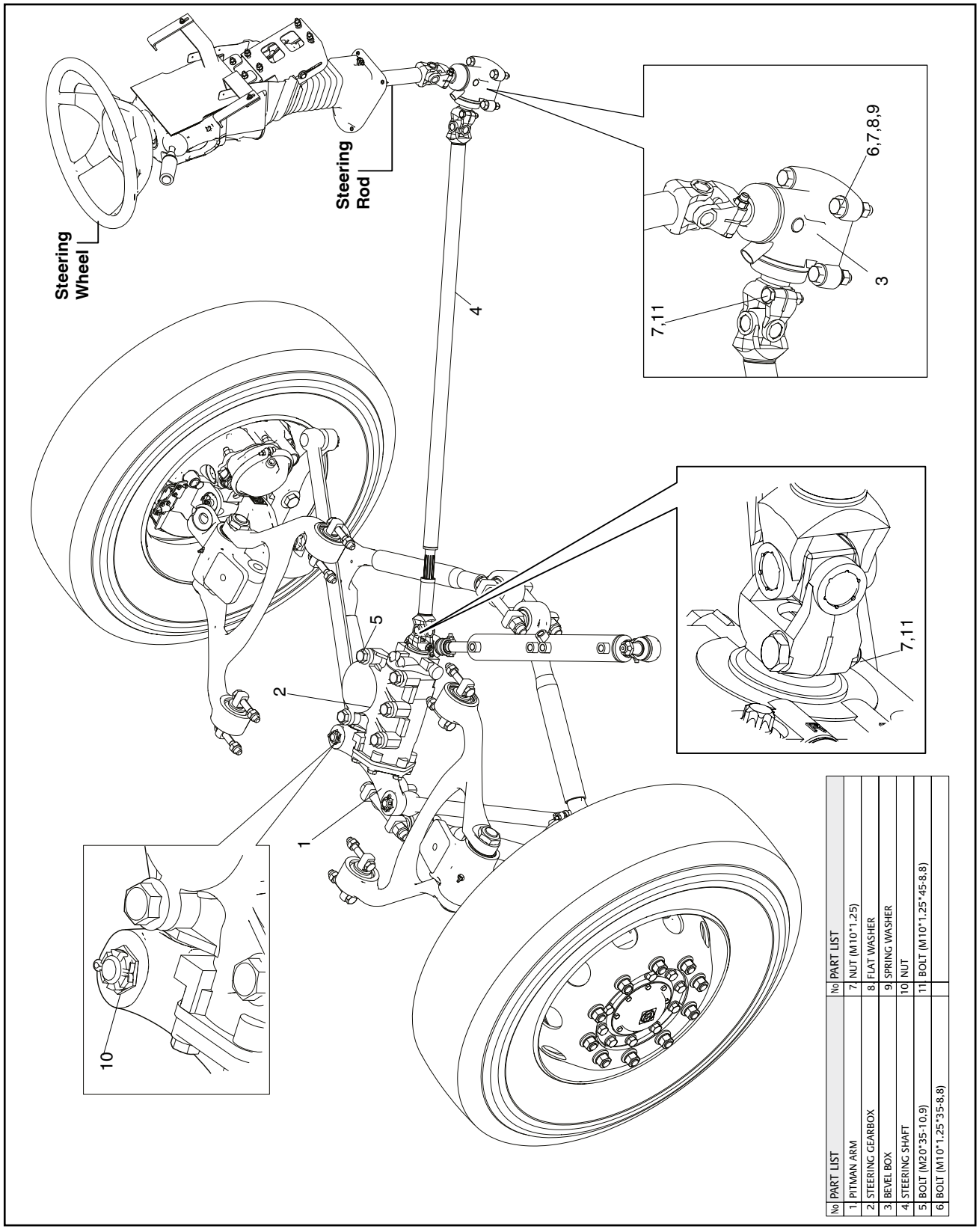

№	PART LIST	№	PART LIST
1	PITMAN ARM	7	NUT (M10*1.25)
2	STEERING GEARBOX	8	FLAT WASHER
3	BEVEL BOX	9	SPRING WASHER
4	STEERING SHAFT	10	NUT
5	BOLT (M20*35-10.9)	11	BOLT (M10*1.25*45-8.8)
6	BOLT (M10*1.25*35-8.8)		

3. SERVICE PROCEDURE

3.1. EXPLODED VIEW OF THE STEERING SYSTEM

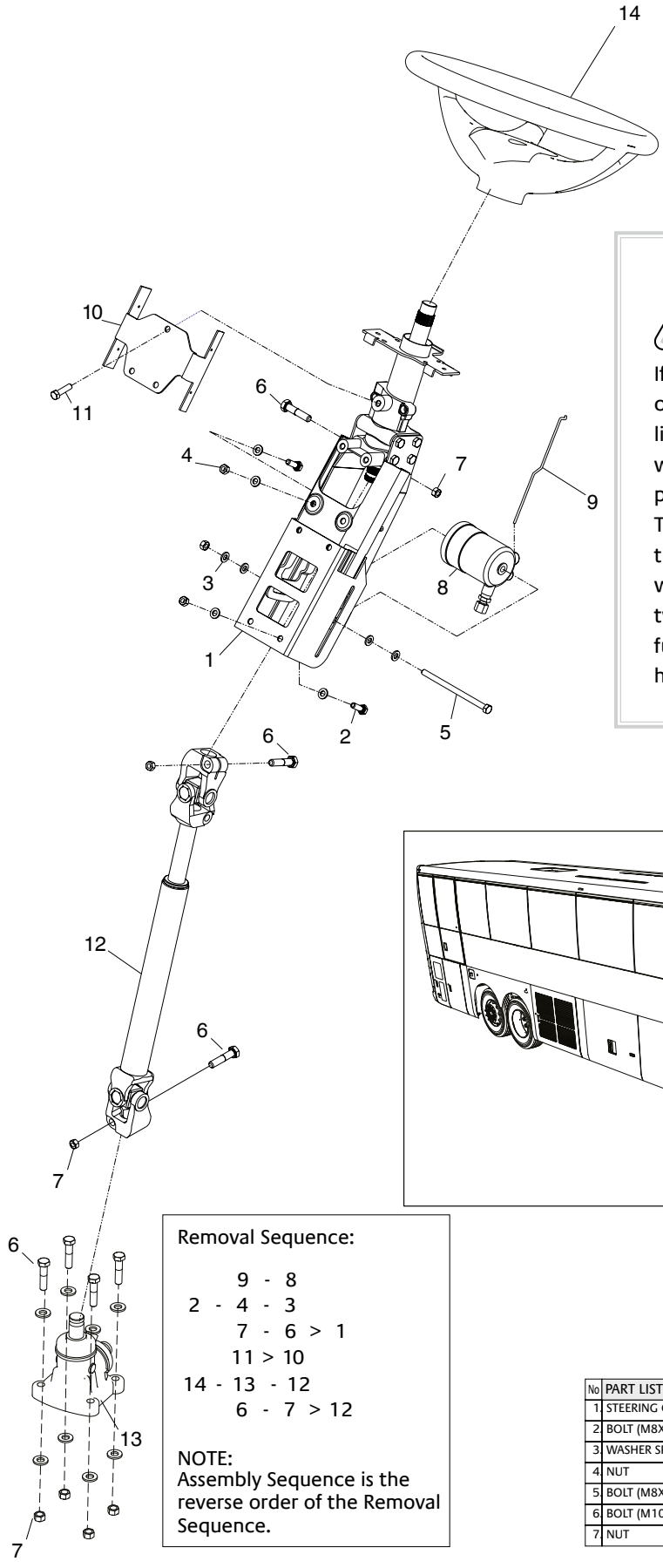

CAUTION

If the steering wheel position is not correct or if a length correction of the steering linkage turns out to be necessary. It may well be that this necessity originates in a preceeding accident – like event.
Therefore, recomended to check whether the serration of the sector shaft is twisted, whether the input shaft is installed in a twisted position and whether some or all further transmission elements are bent or have cracks.

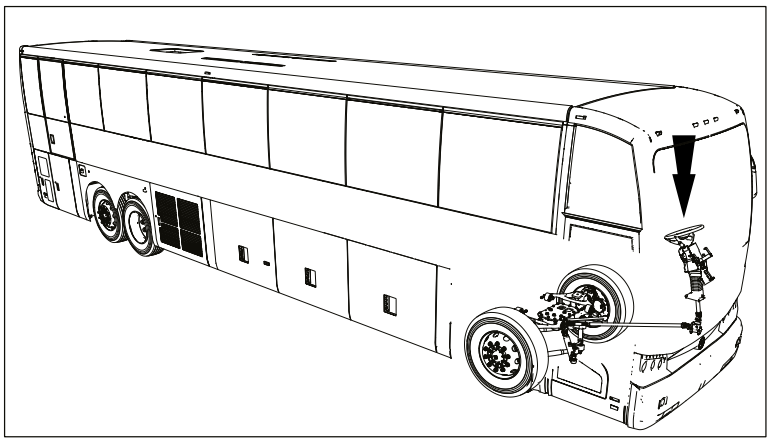

Removal Sequence:

9 - 8
2 - 4 - 3
7 - 6 > 1
11 > 10
14 - 13 - 12
6 - 7 > 12

NOTE:
Assembly Sequence is the reverse order of the Removal Sequence.

No	PART LIST	No	PART LIST
1.	STEERING COLUMN	8.	IGNITION LOCK
2.	BOLT (M8X1,25X25)	9.	MIL
3.	WASHER SPRING	10.	STEERING COVER BRACKET
4.	NUT	11.	BOLT
5.	BOLT (M8X1,25X130)	12.	INTERACTIVE SHAFT
6.	BOLT (M10X1,5X45)	13.	ADAPTER ASSEMBLY
7.	NUT	14.	STEERING WHEEL

Removal Sequence:

20 - 19 - 18
24 - 26 - 25 - 22 > 23 > 21
9 - 7 - 6 - 5 - 29 - 28 - 27 - 4 - 1 - 2 - 3
17 - 16 - 33 - 7 - 6 - 5 - 32 - 31 - 30 - 8 - 10 > 29
13 - 16 - 15 > 12 > 30

NOTE:
Assembly Sequence is the reverse order of the Removal Sequence.

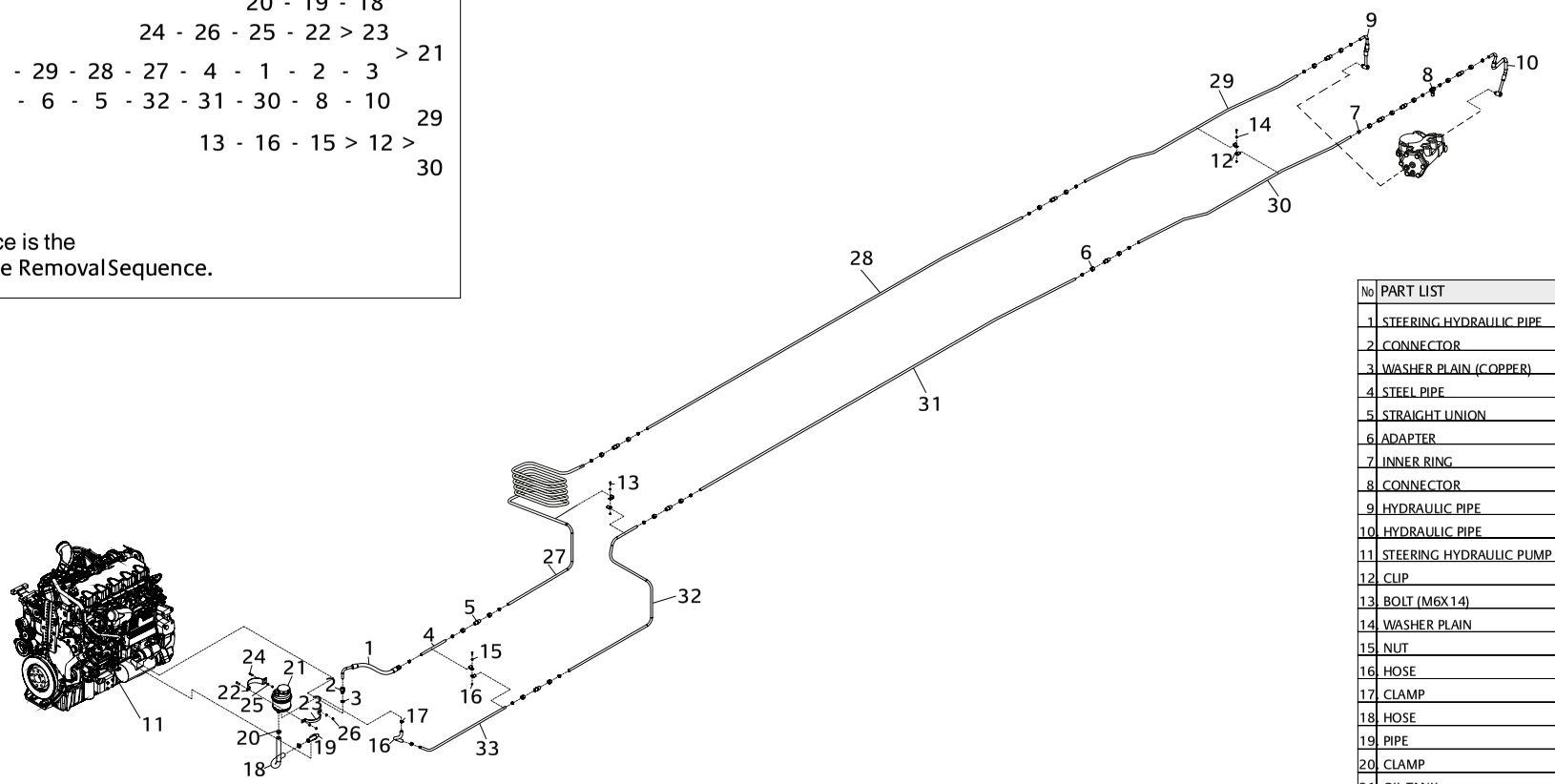

No	PART LIST
1	STEERING HYDRAULIC PIPE
2	CONNECTOR
3	WASHER PLAIN (COPPER)
4	STEEL PIPE
5	STRAIGHT UNION
6	ADAPTER
7	INNER RING
8	CONNECTOR
9	HYDRAULIC PIPE
10	HYDRAULIC PIPE
11	STEERING HYDRAULIC PUMP
12	CLIP
13	BOLT (M6X14)
14	WASHER PLAIN
15	NUT
16	HOSE
17	CLAMP
18	HOSE
19	PIPE
20	CLAMP
21	OIL TANK
22	BRACKET
23	BRACKET
24	BOLT (M8X25)
25	WASHER PLAIN
26	NUT
27	STEEL PIPE
28	STEEL PIPE
29	STEEL PIPE
30	STEEL PIPE
31	STEEL PIPE
32	STEEL PIPE
33	STEEL PIPE

4. TROUBLESHOOTING

FAULT	CAUSE	REMEDY
HEAVY ON BOTH SIDES 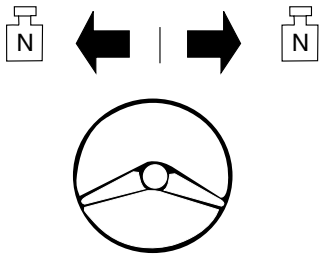	Insufficient oil level in the tank	Eliminate leakage. Fill the oil tank up to maximum point.
	Air in the system	Replace seals. Fill the oil tank up to maximum point. Ventilate the system.
	Distorted, worn system components	Check the system components if necessary replace.
	Contaminated or broken oil filter	Replace the filter. Clean control valve and suction line.
	Internal fault	Exchange the pump. Exchange the steering.
	Not close and incorrectly setting of the components	Control the setting. Clean the components if necessary replace them.

FAULT	CAUSE	REMEDY
HEAVY ON ONE SIDE 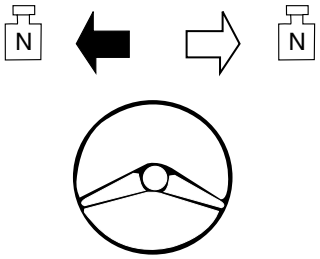	Deformation or misalignment at bars	Control the system and components. If necessary replace them.
	Loose components	Replace O-rings and valves.
	Internal fault	Exchange steering.
	Distorted, worn system components	Check the system components if necessary replace.

FAULT	CAUSE	REMEDY
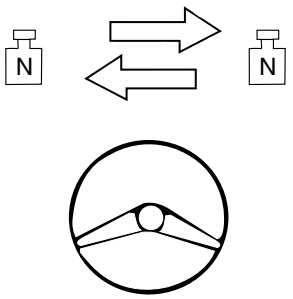	Air in the oil tank system	Replace seals. Fill the oil tank up to maximum point. Ventilate the system.
	Not close and incorrectly setting of the components	Clean the components. If necessary replace them.
	Internal fault	Exchange the pump.

4. TROUBLESHOOTING

FAULT	CAUSE	REMEDY
INHIBITING RETURN V(mp/h) 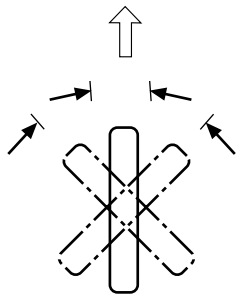	Components motion is heavy	Lubricate the steering components.
	Distorted system components	Control the system and if necessary loosen bracing.
	Insufficient lubrication and worn components	Lubricate the system components. If necessary replace them.
	Internal fault	Exchange steering.

FAULT	CAUSE	REMEDY
NOT EXACT V(mp/h) 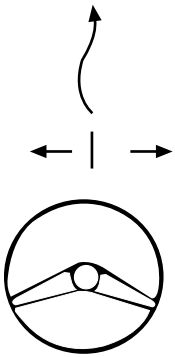	Insufficient oil level in the tank	Eliminate leakage. Fill the oil tank up to maximum point. Ventilate the system.
	Looseness connections	Tighten the connections and if necessary exchange them.
	Components motion is heavy	Lubricate the steering components.
	Control the system connection torques	Tighten the connections up to required values.
	Air in the system	Replace seals. Ventilate the system.
	Internal fault	Exchange steering.

FAULT	CAUSE	REMEDY
STEERING WHEEL LOCKS V(mp/h) 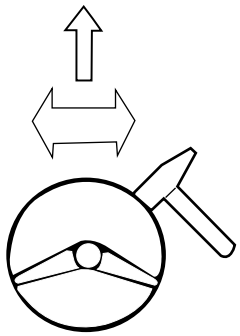	Insufficient oil level in the tank	Eliminate leakage. Fill the oil tank up to maximum point.
	Free play components Air in the system	Replace the necessary components. Replace seals. Ventilate the system.
	Internal fault	Exchange steering.

4. TROUBLESHOOTING

FAULT	CAUSE	REMEDY
TORSIONAL VIBRATIONS 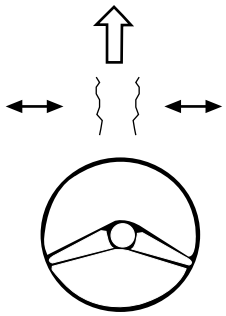	Imbalance of the wheel	Balance the wheels.
	Out of adjustment wheel angles (Camber, kingpin etc.)	Set the wheel angles.
	Air in the system	Replace seals. Ventilate the system.

FAULT	CAUSE	REMEDY
PLAY IN STEERING WHEEL 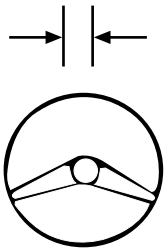	Loose connections and insufficient applied torques	Control the components torques. If necessary tighten or replace them.
	Internal fault	Exchange steering.

FAULT	CAUSE	REMEDY
RUNS OUT 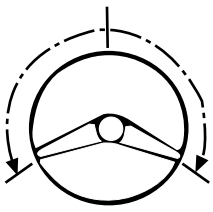	Internal fault	Exchange steering.

4. TROUBLESHOOTING

FAULT	CAUSE	REMEDY
NOISES 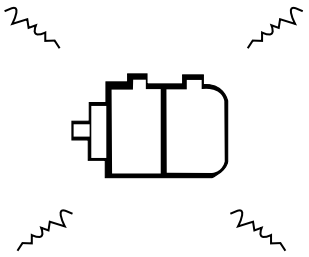	Air in the oil tank system	Replace seals. Fill the oil tank up to maximum point. Ventilate the system.
	Insufficient oil level in the tank	Eliminate leakage. Fill the oil tank up to maximum point.
	Pressure line deformation	Control the pressure line components for distortion and crashing. If necessary replace them.
	Out of adjustment system pressure Internal fault	Adjust the system pressure. Exchange steering.

FAULT	CAUSE	REMEDY
LOSS OF OIL 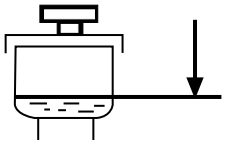	Loose oil tank cover	Close oil tank cover carefully.
	Distorted O-rings	Control system. If necessary replace components.
	Loose lines and distorted seals	Replace seals and tighten lines.
	Internal fault	Exchange steering.

14 FUEL TANK AND EQUIPMENT

Rev.00 / 25.03.14

1. TOOLS **2**

2. REMOVING FUEL TANK **3**

2.1. Fuel Tank Line 4

3. REMOVAL AND INSTALLATION OF FUEL TANK **5**

4. ON VEHICLE ADJUSTMENT & INSPECTIONS **5**

5. PRE-HEATER: FITTING A NEW FUEL FILTER **6**

6. SERVICE PROCEDURE **7**

6.1. Removal Of The Fuel Filter 7

6.2. Installing Of The Fuel Filter 8

7. INSPECTION **10**

8. BLEEDING OF FUEL SYSTEM **10**

9. TROUBLESHOOTING **11**

GENERAL

- If work is performed by people who do not have the necessary training to carry out the work or if this information is handled carelessly or totally ignored, this may result in severe injury and/or death. Inaddition, serious damage to the vehicle may occur.
- Always read the safety instructions in full before starting certain operations. The safety instructions stipulate which aspects must be considered to achieve maximum safety. The information is given that is very important for health and safety.
- Always work in adequately ventilated rooms with sufficient lighting, free from dirt and clutter. Never leave tools or parts lying around, keep away from (high-) voltage sources that present a risk of short-circuiting. Always wear protective clothing. Do not wear any damaged or loose-fitting clothing and remove jewelry before starting the work. In case of long hair use hairnet.

1. TOOLS

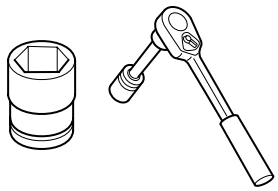 Impact Socket	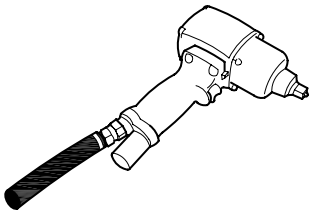 Impact Wrenches	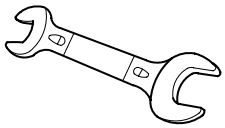 Open Wrench Double Ended
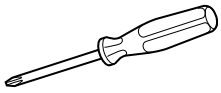 Screw Driver	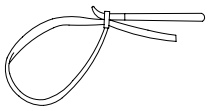 Strap Wrench	 Double Ended Ring Spanner

2. REMOVING FUEL TANK

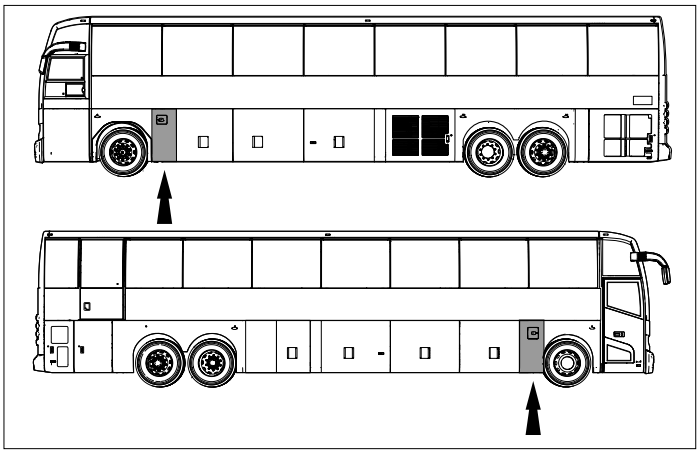

WARNING

- Drain all fuel from the tank before starting work.
- To minimize the risk of fire, wipe up any spilled fuel.
- To prevent an explosion, keep the fuel tank and fuel away from flames and heat sources.

Removal Sequence:

9 - 11 - 2 > 12

16 > 3 > 13

6 - 10 - 15
1 - 5 - 7 - 8 > 14

NOTE:
Assembly Sequence is the reverse order of the Removal Sequence.

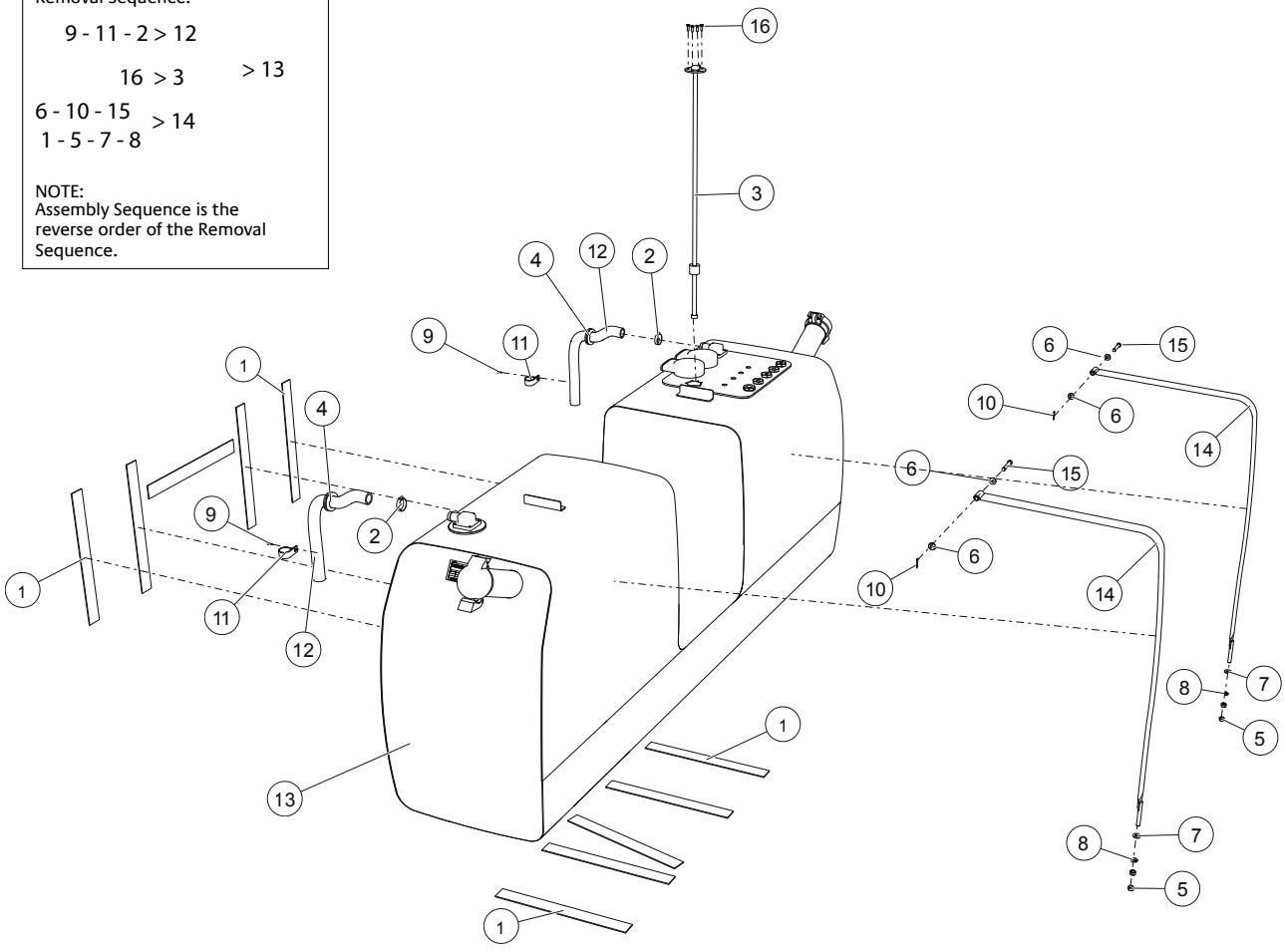

PART LIST	NO
RUBBER BAND	1
BAND CLAMP	2
SENSOR (S5-A-800)	3
GROMMET,ø36	4
NUT(M10)	5
WASHER,PLAIN (A 8.4)	6
WASHER,PLAIN (A 10,5)	7
WASHER,SPRING (10)	8

PART LIST	NO
BOLT (5x16)	9
PIN,SPLIT	10
CLAMP	11
HOT WATER HOSE	12
FUEL TANK	13
FUEL TANK BELT	14
PIN	15

2.1. FUEL TANK LINE

1. The fuel pump draws fuel from the fuel tank though the fuel filter.
2. The fuel leaves the fuel filter and it goes through the injection pump, the fuel pump is driven tby engine's camshaft.
3. The injection pump distributes metered amounts of fuel at high pressure to the injector nozzles on the individual cylinders.
4. Excess fuel pumped by the fuel injection pump and from the injector nozzles is returned to the fuel tank via the return line.

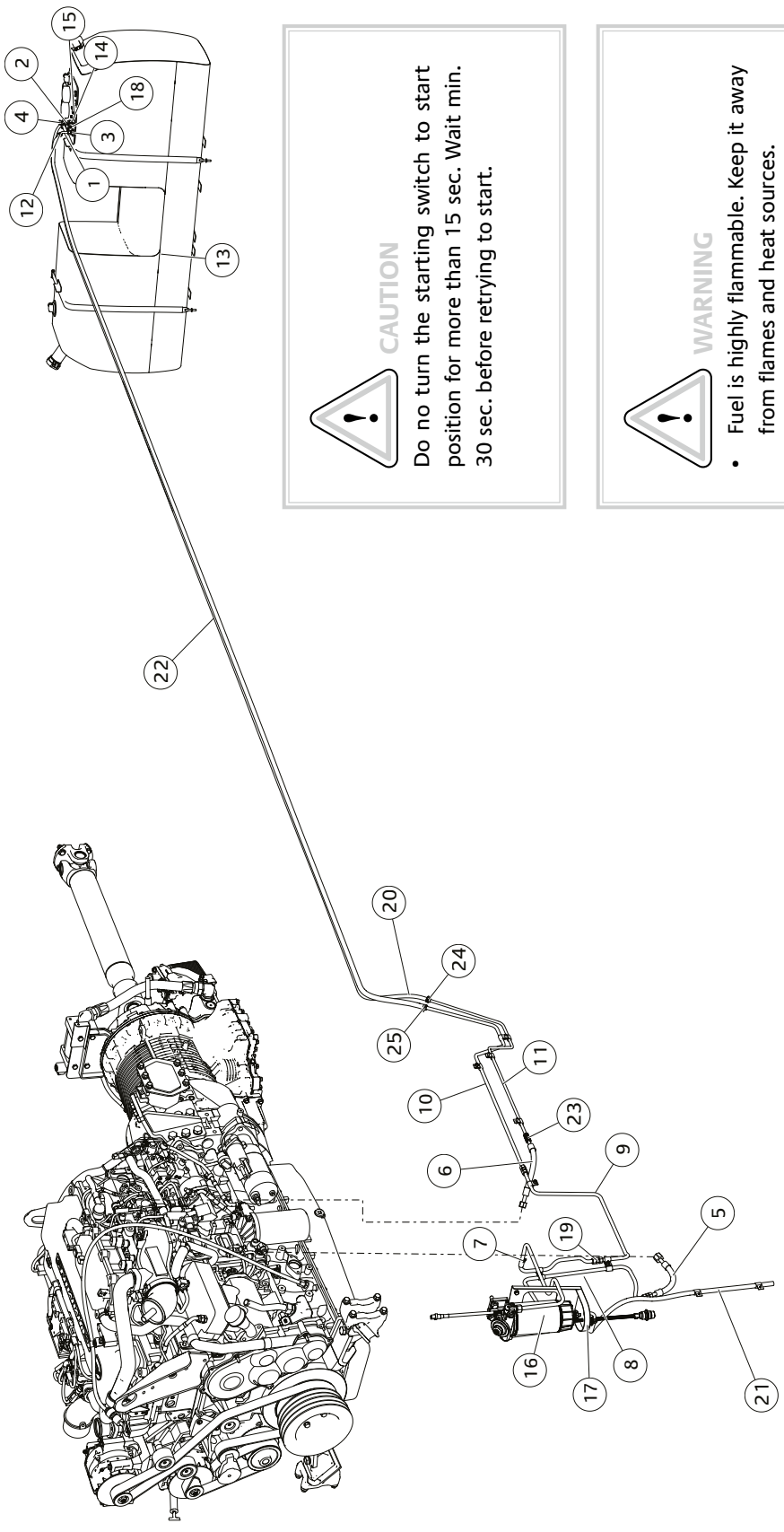

CAUTION

Do no turn the starting switch to start position for more than 15 sec. Wait min. 30 sec. before retrying to start.

WARNING

- Fuel is highly flammable. Keep it away from flames and heat sources.
- To minimize the risk of fire, wipe up any spilled fuel.
- Use of an unsuitable fuel filter may lead to fuel leaks and fires. Be sure to use a genuine filter.
- After fitting the fuel filter, start the engine and check that no fuel leakage occurs. Any leaking fuel could cause a fire.

PART LIST	NO
FUEL PIPE	1
FUEL PIPE	2
CONNECTOR, 1/2 NPTF	3
BAND CLAMP	4
FUEL HOSE	5
FUEL HOSE	6
FUEL PIPE	7
FUEL PIPE	8
FUEL PIPE	9

PART LIST	NO
FUEL PIPE	10
FUEL PIPE	11
CLAMP,HOSE(20)	12
FUEL TANK	13
CONNECTOR	14
LOCKING SCREW	15
FUEL FILTER	16
BRACKET	17
PLUG BOLT	18

PART LIST	NO
CONNECTOR	19
FUEL HOSE	20
FUEL HOSE	21
FUEL HOSE	22
CONNECTOR	23
BAND CLAMP	24
CLAMP,HOSE(20)	25



CAUTION

- Protect parts from flames and heat sources because of risk of explosion and burning:
- Remove fuel piping-returning line hoses and piping.
- Disconnect fuel gauge unit's cables.



INSPECTION

- Be sure hoses and pipes are not split or damaged during assembling.
- Replace fuel tank if there is visible external damage (fuel leak, split, corrosion etc.)

3. REMOVAL AND INSTALLATION OF FUEL TANK

Drain fuel from tank completely before removal.

Cleaning of Fuel Tank

If there is mud formation or filter is blocked, %0.1 disinfectant is added to 100 liters diesel fuel when filling tank. This procedure is repeated three times.Fuel prefilter must be checked regularly during
handling.

Checking Fuel Gauge Unit

Fuel gauge unit conveys fuel level information to fuel display clock on front display panel. Check fuel gauge unit resistance according to fuel level condition from table indicated above. If there is high deviation in measures, replace fuel gauge unit. Damaged fuel gauge unit conveys fuel level wrong to display.

Assembly Sequence

Follow the disassembly sequence in reverse.

4. ON VEHICLE ADJUSTMENT & INSPECTIONS

Checking for Fuel Leaks

- Visually inspect all hose connections and fuel system components for leaks, damage and corrosion.
- Renew parts that are faulty or damaged.
- Visually check the fuel system lines and parts for leaks, particularly near components which reach high temparatures during operation e.g. injection pump, injector nozzle, auxiliary heater exhaust.
- Immediately repair any leaks found.
- Always ensure complete cleanliness when performing any work on the fuel.

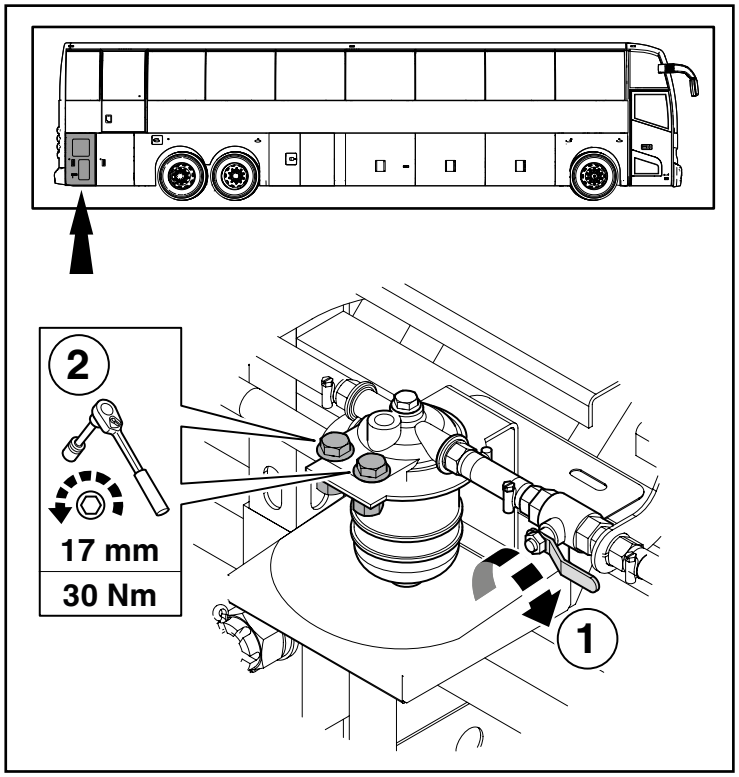

5. PRE-HEATER: FITTING A NEW FUEL FILTER

1. Close fuel valve fuel valve perpendicular to fuel line.
2. Unscrew and remove mounting bolts.

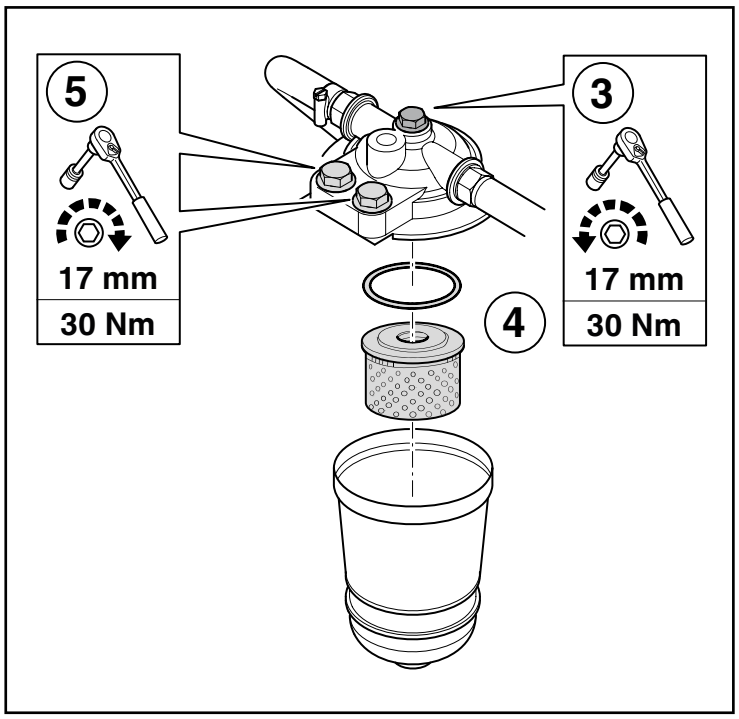

3. Unscrew and remove mounting bolt.
4. Fit a new filter insert and sealing ring.
5. Screw in all 3 mounting bolts, making sure that the sealing ring is correctly fitted.
6. Open fuel valve (stop valve parallel with fuel line).
7. Switch on the auxiliary heater to bleed the system.
8. Check the fuel filter for leaks at the parts and at the filter insert.

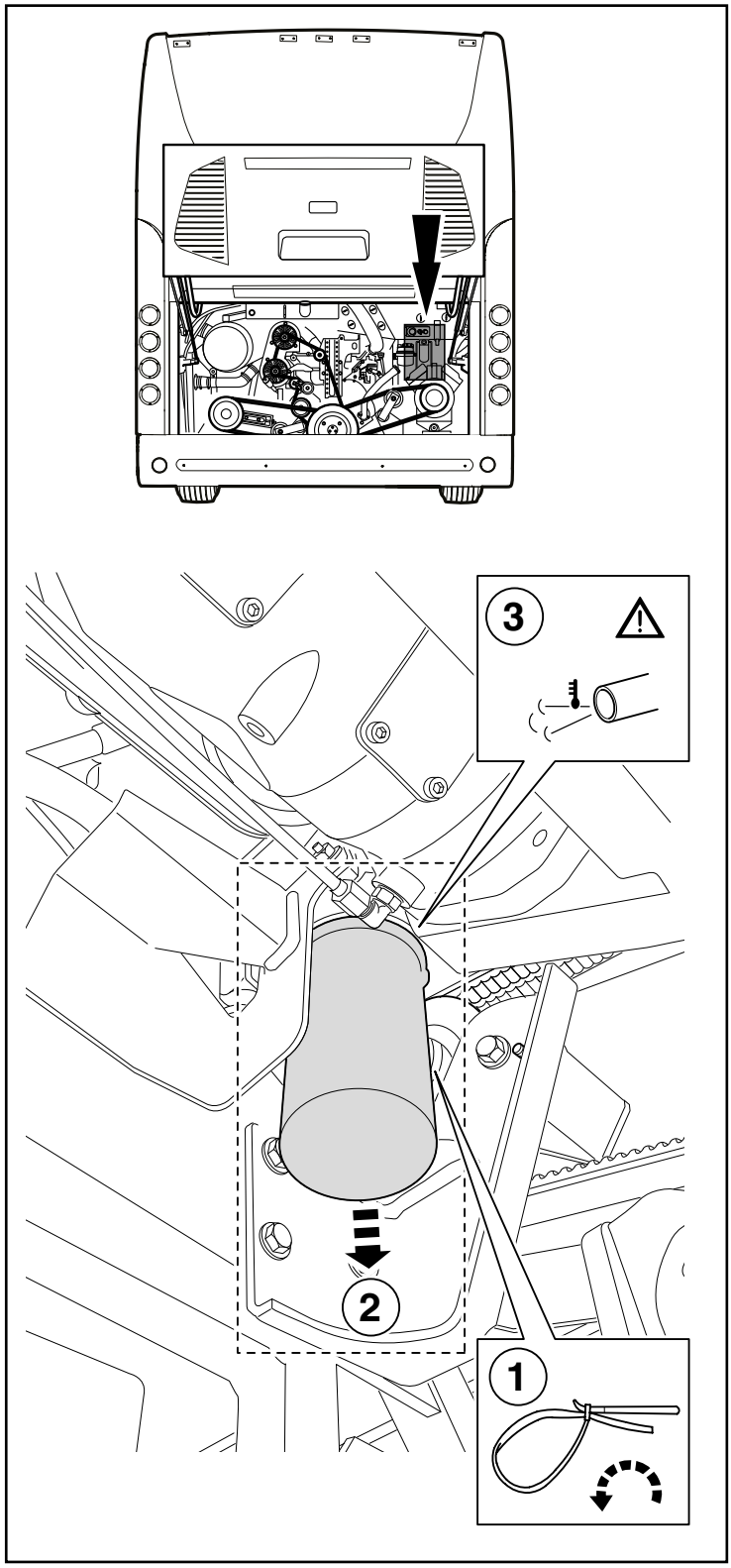

6. SERVICE PROCEDURE

6.1. REMOVAL OF THE FUEL FILTER

1. Turn fuel filter anticlockwise using strap wrench.
2. Remove fuel filter.

WARNING

- Beware of fuel leakage!
- When removing the fuel filter, a quantity of fuel will escape. Collect the fuel to avoid the risk of fire. Consider environment
- Fire hazard.

CAUTION

You must only use genuine Temsa spare parts due to the more stringent fuel purity requirements.

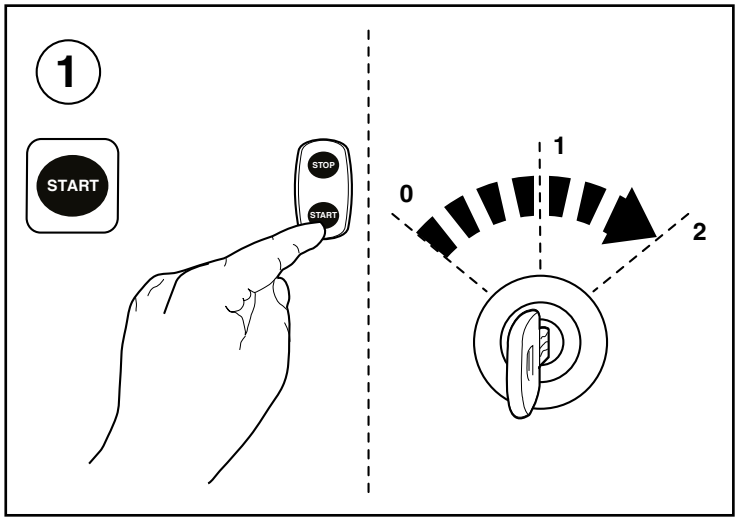

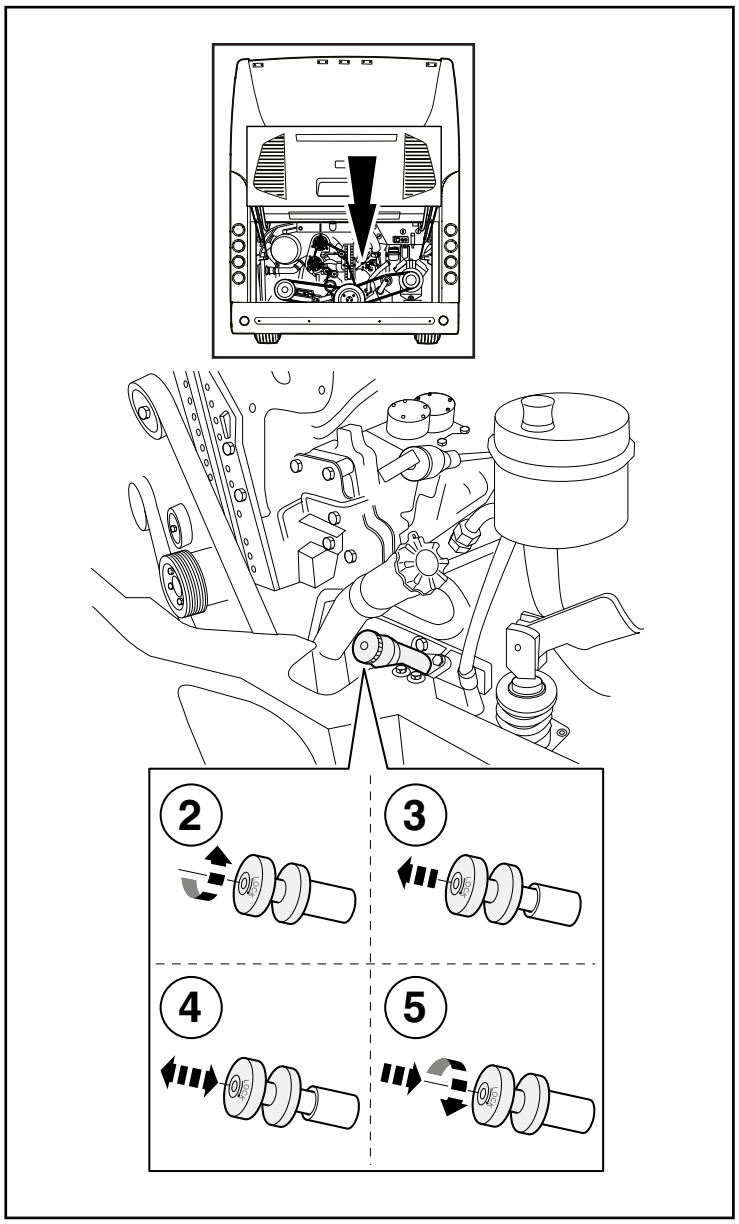

6.2. INSTALLING OF THE FUEL FILTER

1. Start the engine and check for leaks, if the vehicle does not start, it means there must be a leak.
2. Turn the primer pump button anti-clockwise.
3. Pull out pump button.
4. Operate the primer pump until the pump resistance increases.
5. Turn the primer pump button clockwise.

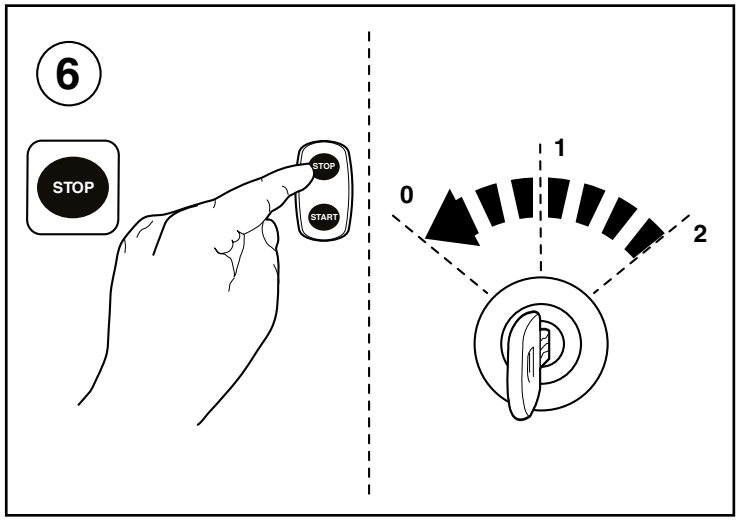

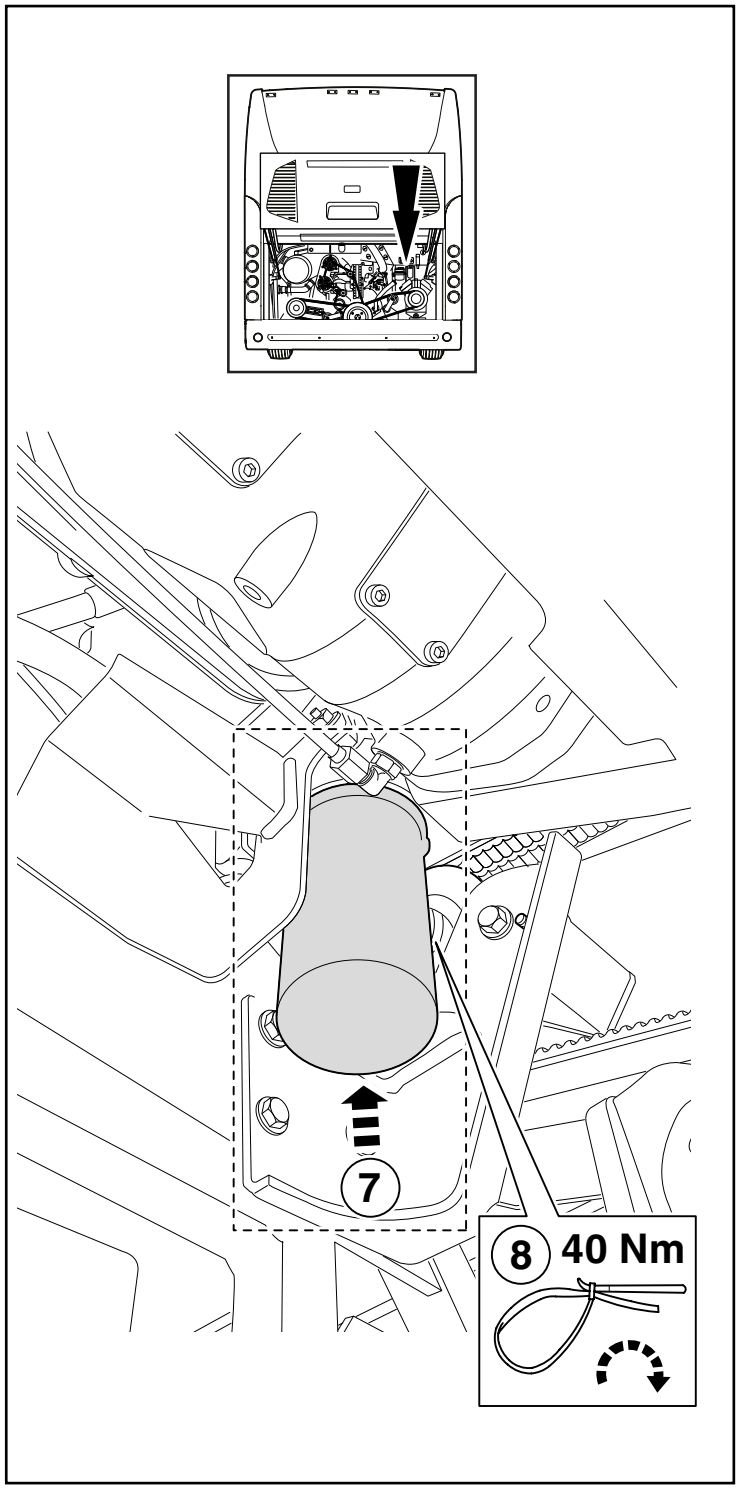

6.2. INSTALLING OF THE FUEL FILTER

6. Turn engine off.
7. Lightly lubricate the sealing ring with engine oil. Fit the filter element to the filter housing.
8. Tighten the filter housing cap to 40 Nm..

7. INSPECTION

- Checking For Fuel Leaks.
- Visually inspect all hose connections and fuel system components for leaks, damage and corrosion.
- Renew any parts that are faulty or damaged.
- Visually check the fuel system lines and parts for leaks, particularly near components which reach high temperatures during operation e.g. injection pump, injector nozzle, flame short system, auxiliary heater exhaust.
- Immediately repair any leaks found.
- Always ensure complete cleanliness when performing any work on the fuel.
- If there is a fuel leak, do not bleed the air.

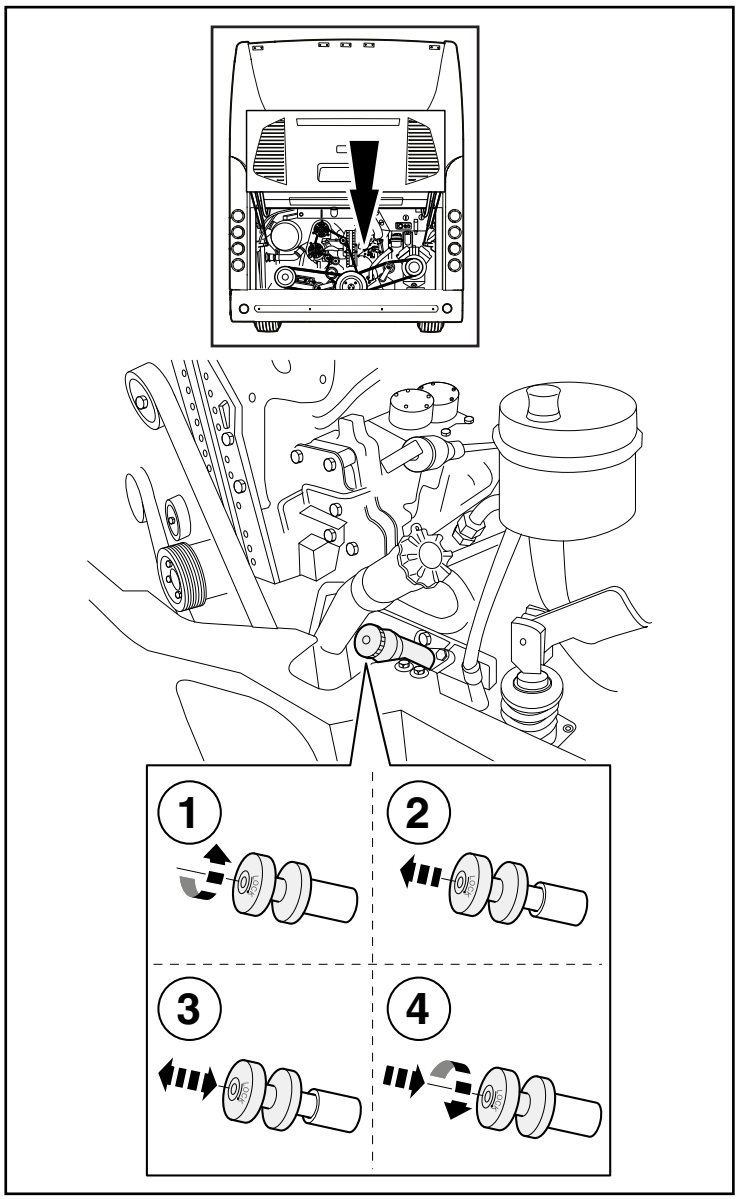

8. BLEEDING OF FUEL SYSTEM

WARNING

Danger of fire and explosion!

CAUTION

Never let the tank run without fuel other wise, it will be necessary to bleed the fuel system.

1. Unscrew the hose connection of the fuel pipes on the supply pump which are connected to the fuel coarse filter.
2. Turn the fuel coarse filter knop counter-clockwise direction and operate the primer pump until the pump resistance increases.
3. Near the end of the pumping process, air bubbles are created in the bowl of the fuel coarse filter.
4. After the pumping process, nearly 0,5 lt. fuel will be drained from the loosened fuel pipes.
5. After the fuel draining process, loosened fuel pipes are again stiffened.
6. Turn the primer pump button clockwise

If the engine does not start in 10 sec., the process is repeated. After the engine is started, blocked fuel cycle hose is released.

CAUTION

Do not turn the starting switch to start position more than 15 sec. Wait minimum 30 sec. to turn the starting switch to start position again.

9. TROUBLESHOOTING

POSSIBLE CAUSES / SYMPTOMS		Engine will not start	Engine difficult to start	Engine knocks	Unstable engine output	Insufficient engine output	Unstable engine idling	Engine stops soon after starting	Engine does not reach maximum speed	Engine will not stop	Accelerator pedal too stiff	Defective fuel supply	Warning lamp of electronically controlled fuel injection pump system flashes
Injection nozzles	Sticky needle valve	X											
	Valve opening pressure too low	X							X				
	Blocked injection orifice	X		X		X	X		X				
	Poor airtightness in nozzle	X		X		X	X		X				
	Valve opening pressure too high			X									
	Broken spring				X	X							
	Defective sliding action in needle valve				X								
	Defective valve opening pressure				X								
	Weakness/deterioration in spring						X						
Fuel filter	Clogged filter	X			X		X	X					
	Fuel tank empty	X											
	Fuel pipes blocked and/or fuel leaking from connections	X											
	Air or water in fuel system	X											
	Low-quality fuel in use	X			X		X	X					
Engine control	Incorrect accelerator pedal stopper bolt adjustment					X			X				
	Rusted accelerator pedal arm										X		
	Broken or elongated engine stop cable												
	Poorly adjusted engine stop cable												
	Cracked fuel pipe											X	
	Leaky fuel tank											X	
	Incorrect oil viscosity LGr12		X				X						
	Faults operation of electronically controlled fuel injection pump system												X
	Incorrect valve clearance LGr11		X				X						
	Defective cylinder head gasket LGM1		X				X						
	Wear and/or carbon deposits on valve and valve seat LGi-11		X				X						
	Weakness/deterioration in valve spring LGr11		⊠				X						
	Worn/damaged piston ring(s) LGr11		⊠				X						
	Worn/damaged piston ring groove(s) LGr11		⊠				X						
	Worn piston and cylinder liner LGr11		⊠										
	Cooling system malfunctioning LGr14		⊠				X						
	Defective starter switch b Electrical		⊠										

9. TROUBLESHOOTING

	POSSIBLE CAUSES / SYMPTOMS	Engine will not start	Engine difficult to start	Engine knocks	Unstable engine output	Insufficient engine output	Engine maximum speed too high	Unstable engine idling	Engine stops soon after starting	Engine does not reach maximum speed	Engine will not stop	Accelerator pedal too stiff	Defective fuel supply	Warning lamp of electronically controlled fuel injection pump system flashes
Injection pump proper	Sticky plunger	X												
	Sticky control rack	X												
	Sticky delivery valve	X												
	Worn tappet	X												
	Worn camshaft	X												
	Poorly adjusted injection timing		X		X	X		X						
	Worn plunger					X		X						
	Defective delivery valve seat					X								
	Excessively advanced injection timing			X										
	Insufficient plunger slide stroke				X									
	Broken plunger spring				X			X						
	Defective sliding action in control rack		X		X		X	X						
	Tappet worn or not sliding correctly				X									
	Broken delivery valve spring				X	X								
	Poor airtightness due to loose delivery valve holder				X	X								
	Defective delivery valve operation				X									
	Loose control pinion							X						
Fuel feed pump	Plunger spring not seating correctly							X						
	Delivery valve holder too tight							X						
	Uneven injection volume to cylinders		X					X						
	Gauze filter clogged	X						X	X					
	Check valve not operating	X												
	Sticky piston	X												
	Sticky push rod	X												
	Worn tappet	X												
	Defective check valve operation	X			X									
	Piston worn				X									

15 AIR LINE

Rev.00 / 25.03.14

1. TOOLS 2

2. STRUCTURE AND OPERATION 3

2.1. General Precautions 3

2.2. Air Tanks 4

2.3. Brake System Air Line 5

2.4. Suspension Line 6

2.5. Door Line 7

2.6. Air Dryer Line 8

3. ON VEHICLE ADJUSTMENT & INSPECTIONS 9

3.1. Air Dryer 9

3.2. Air Tanks 9

4.SERVICE PROCEDURE 10

4.1. Exploded View Of The Air Tanks 10

5. TROUBLESHOOTING 11

GENERAL

- If work is performed by people who do not have the necessary training to carry out the work or if this information is handled carelessly or totally ignored, this may result in severe injury and/or death. Inaddition, serious damage to the vehicle may occur.
- Always read the safety instructions in full before starting certain operations. The safety instructions stipulate which aspects must be considered to achieve maximum safety. The information is given that is very important for health and safety.
- Always work in adequately ventilated rooms with sufficient lighting, free from dirt and clutter. Never leave tools or parts lying around, keep away from (high-) voltage sources that present a risk of short-circuiting. Always wear protective clothing. Do not wear any damaged or loose-fitting clothing and remove jewelry before starting the work. In case of long hair use hairnet.

1. TOOLS

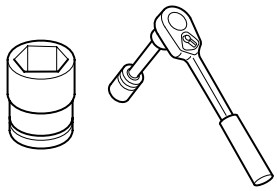 Impact Socket	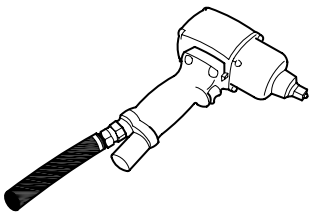 Impact Wrenches	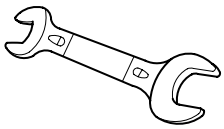 Open Wrench Double Ended
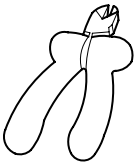 Stripping Plier	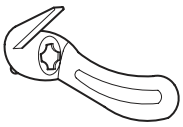 Polyemide Scissors	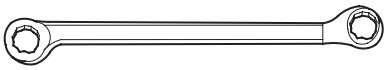 Double Ended Ring Spanner
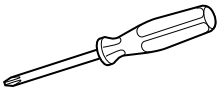 Screw Driver	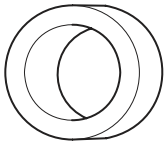 Band	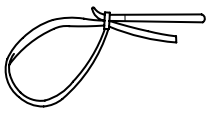 Strap Wrench
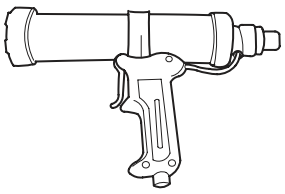 Sealer Machine		

2. STRUCTURE AND OPERATION

2.1. GENERAL PRECAUTIONS

When working on or around the air systems observe these precautions:

- Block the vehicle wheels.
- Stop engine when working under vehicle.
- Depleting the vehicle air system pressure may cause the vehicle to roll. Keep hands away from chamber push rods and slack adjusters; they may activate as system pressure drops.
- Never connect or disconnect a hose or line containing air pressure.
- Never remove a component or pipe plug unless you are certain all system pressure has been removed.
- Never exceed recommended air pressure. Always wear safety glasses when working with air pressure. Never look into air jets or point them at anyone.
- Never attempt to disassemble a component until you have read and understood recommended procedures. Some components contain powerful springs and injury can result if not properly disassembled.
- Use only proper tools and observe all precautions relating to the use of those tools.

2.2. AIR TANKS

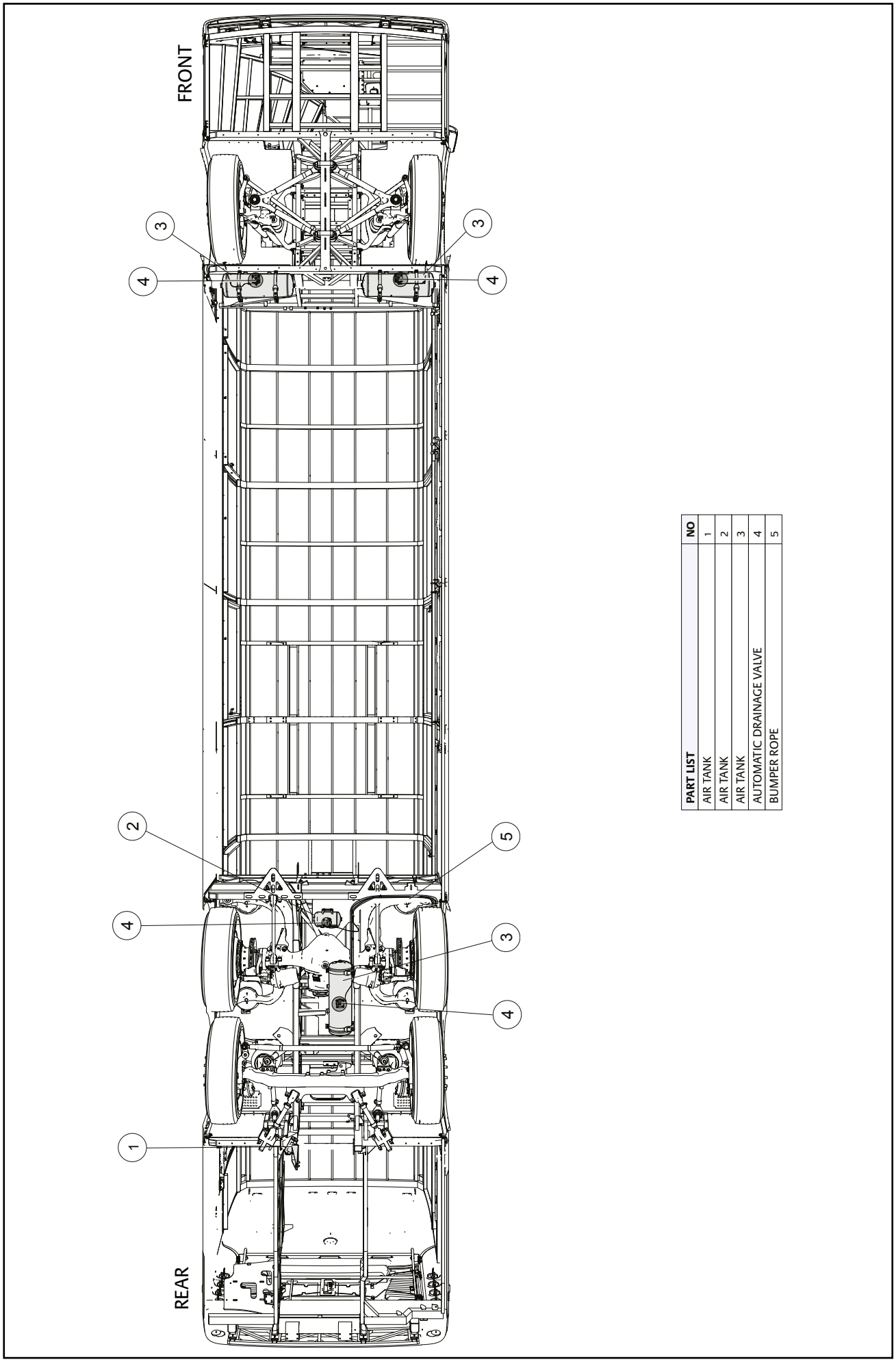

NO	PART LIST
1	AIR TANK
2	AIR TANK
3	AIR TANK
4	AUTOMATIC DRAINAGE VALVE
5	BUMPER ROPE

2.3. BRAKE SYSTEM AIR LINE

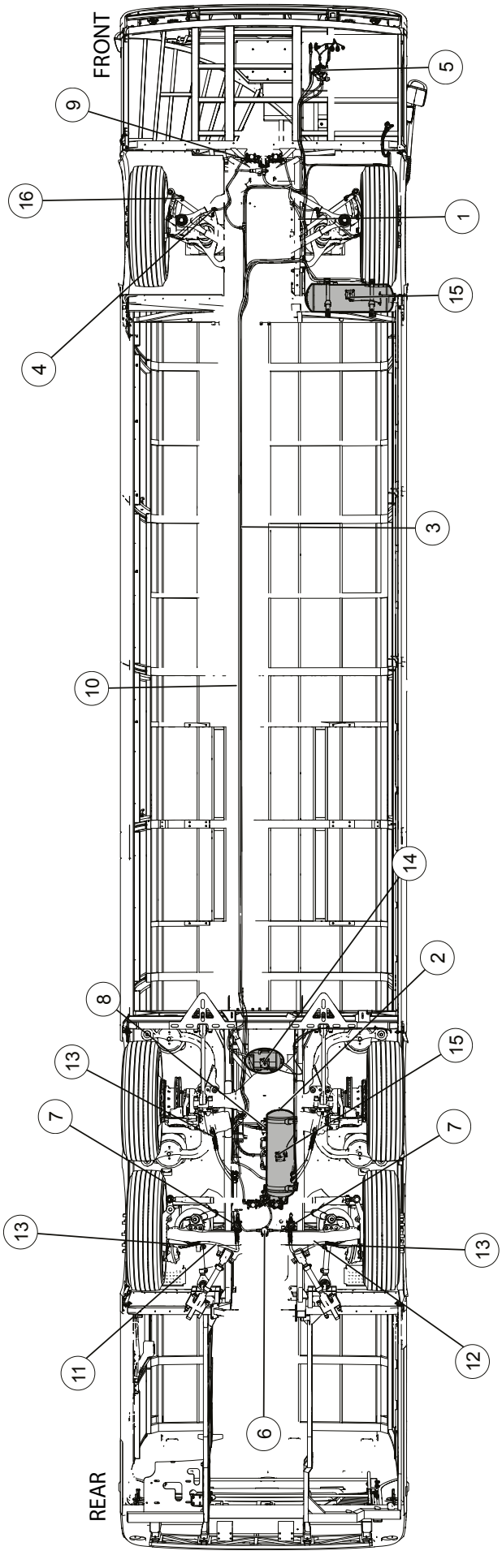

NO	PART LIST
10	AIR SYSTEM HOSE
11	AIR SYSTEM HOSE
12	AIR SYSTEM HOSE
13	PARKER HOSE CONNECTOR
14	AIR TANK (5LT)
15	AIR TANK (36,5L)
16	CONNEKTOR L

NO	PART LIST
1	AIR SYSTEM HOSE
2	AIR SYSTEM HOSE
3	AIR SYSTEM HOSE
4	ELBOW
5	BRAKE PEDAL VALVE
6	QUICK RELEASE VALVE
7	ABS MODULATOR VALVE
8	INVERSION VALVE
9	ABS VALVE GROUP

2.4. SUSPENSION LINE

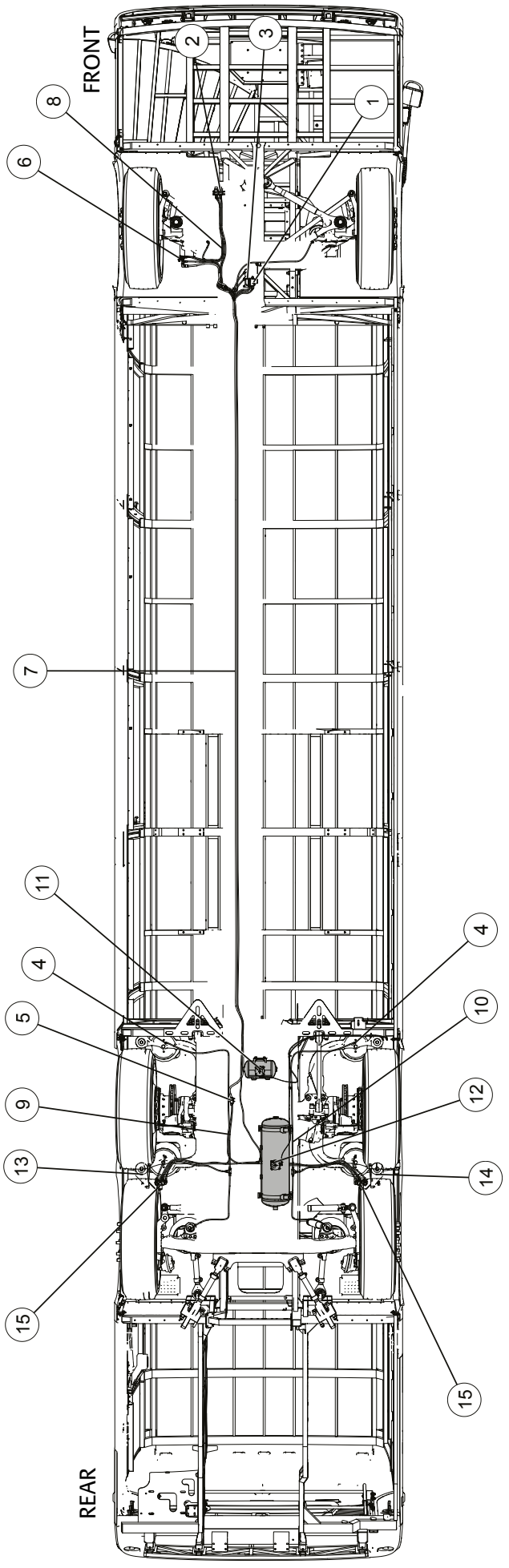

PART LIST	NO
LEVELING VALVE,FRONT	1
3/2 SOLENOID VALVE	2
SETTING DEVICE(LIMITED KNEELING-LIFTING)	3
PUSH-IN MALE:M16 Tube:8mm (5/16")	4
DISTRIBUTION BLOCK (6*M16x1.5)	5
ELBOW M16/M16	6
AIR SYSTEM HOSE	7
AIR SYSTEM HOSE	8
AIR SYSTEM HOSE	9

PART LIST	NO
AIR SYSTEM HOSE	10
AIR TANK (5LT)	11
AIR TANK (36,5L)	12
BRACKET, LEVELING VALVE RIGHT	13
BRACKET, LEVELING VALVE LEFT	14
LEVELING VALVE,REAR	15

2.5. DOOR LINE

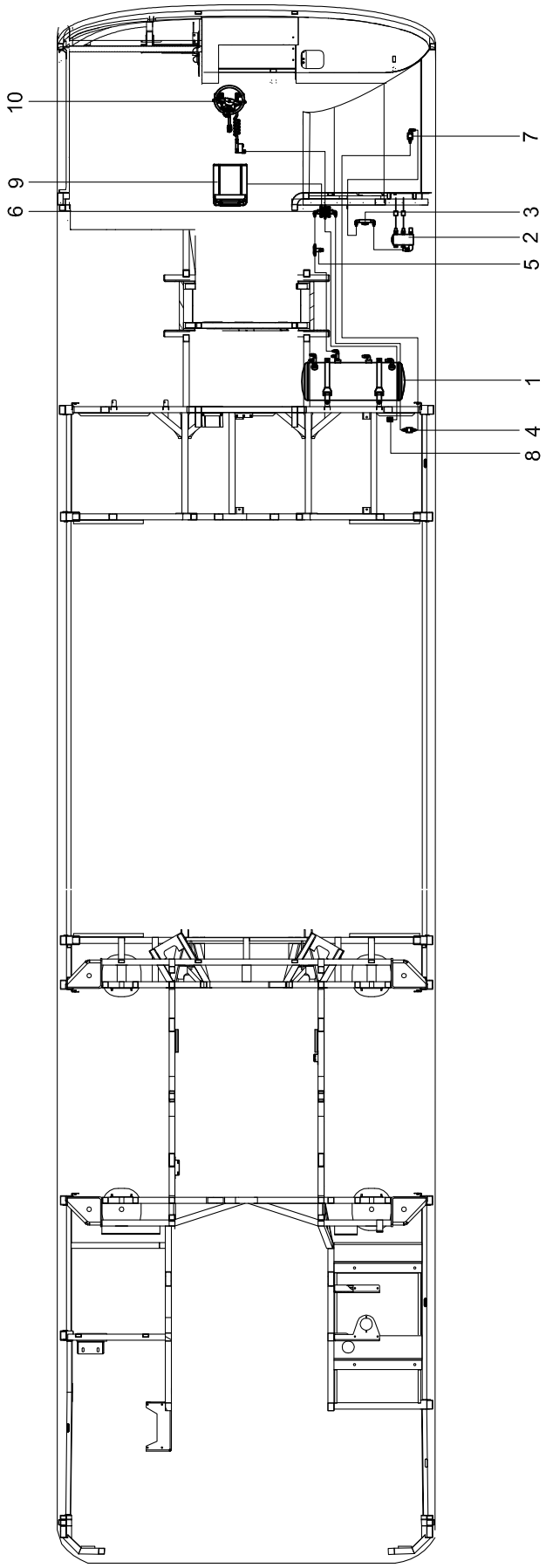

No	PART LIST
1.	SUSPENSION TANK
2.	DOOR CONTROLSELENOIDVALVE
3.	THROTTLE VALVE
4.	DOOR OPENING
5.	LIMITING VALVE

No	PART LIST
6.	MULTI CONNECTOR
7.	HANDLE VALVE
8.	CENTRAL LOCKING
9.	DRIVER SEAT
10.	STEERING COLUMB KIT

2.6. AIR DRYER LINE

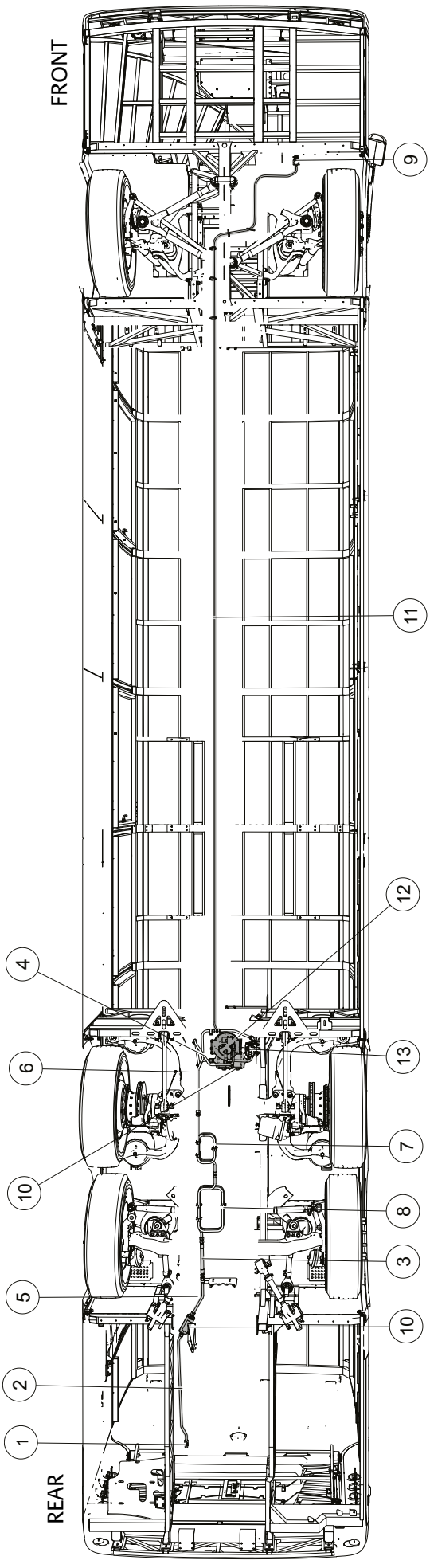

PART LIST	NO
CONNECTOR-COMPRESSOR	1
AIR SYSTEM PIPE	2
AIR SYSTEM HOSE	3
AIR SYSTEM PIPE	4
AIR SYSTEM PIPE	5
AIR SYSTEM PIPE	6
AIR SYSTEM PIPE	7

PART LIST	NO
AIR SYSTEM PIPE	8
AIR FILTER	9
SURGE TANK	10
AIR SYSTEM HOSE	11
AIR DRYER, WABCO SS1200 PLUS (24V)	12
CONDENSER, HALDEX	13

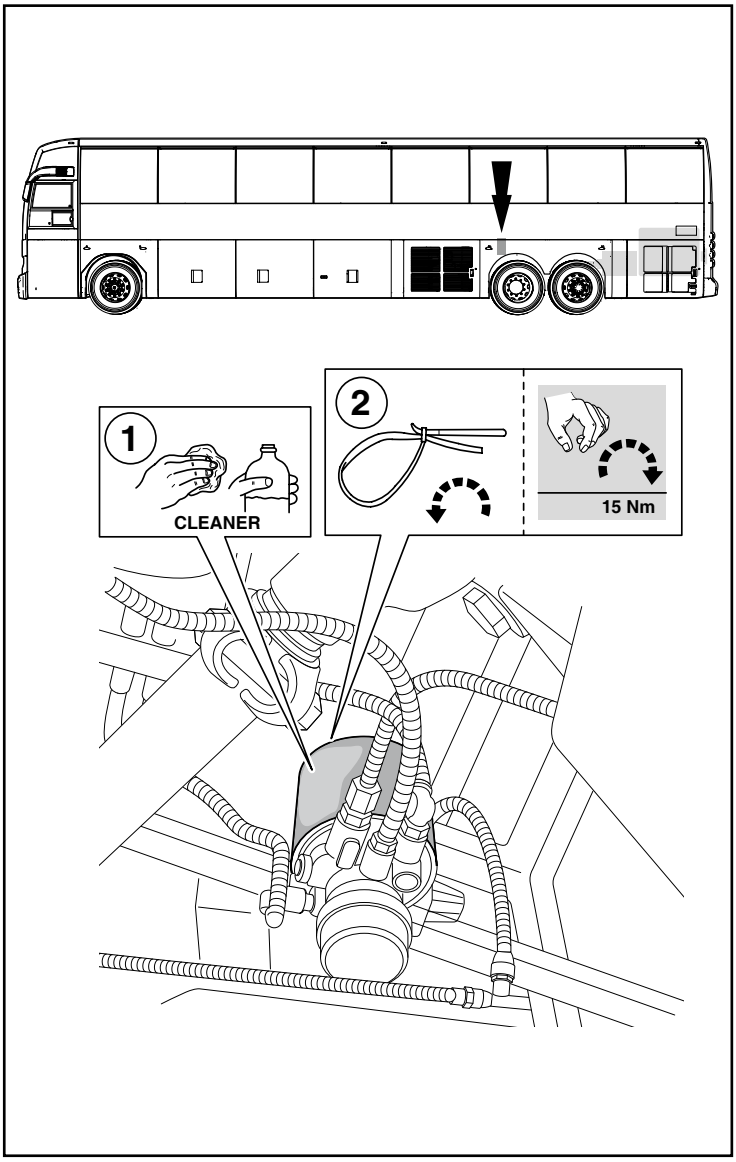

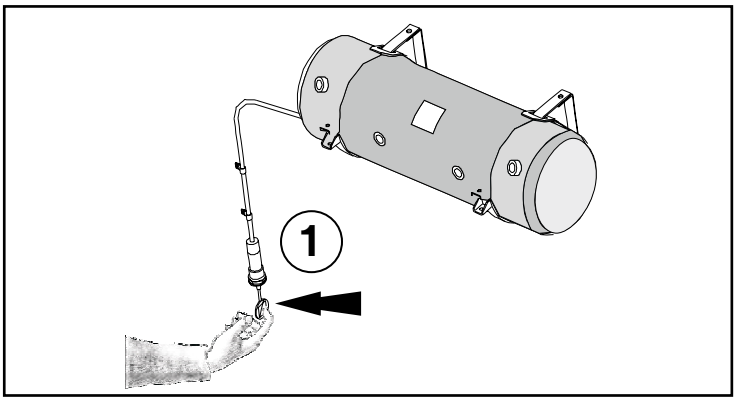

CAUTION

If the air dryer is not functioning, the compressed air braking system could freeze during the winter period. Condensation that has accumulated should be regularly drained. Always wear protective goggles and keep at a safe distance from the water drain valve while draining, water spraying out may lead to eye injuries.

3. ON VEHICLE ADJUSTMENT & INSPECTIONS

3.1. AIR DRYER

The air dryer is fitted in air brake systems to clean and dry the air compressor and also to regulate the operating pressure in the air reservoirs.

The air dryer must be regularly checked for proper operation at the manual drain valve.

Replacement of the desiccant catridge:

1. The surface of the air dryer is cleaned of dirt. The air dryer must be devoid of pressure.
2. The desiccant catridge is unscrewed by turning it counter clock wise (using a filter strap wrench).

- The housing top is cleaned with a rag. Care must be taken to prerag.
- Care must be taken to prevent the ingress of dirt into the clean air area.
- A new desiccant cartridge is fitted.
- The seals are lightly oiled.
- The desiccant cartridge is tightened by hand (tightening torque approx. 15 Nm).
- The used desiccant cartridge must be disposed of as special refuse, since oil separated from the compressed air is deposited inside the cartridge.

3.2. AIR TANKS

Air tanks store compressed air so there will be ample supply for immediate use. Three air tanks are used in this vehicle:

- Front brake tank
- Rear brake tank
- Suspension tank

Drain Air Tank

1. Drain off the accumulated condensate through the drain valves of the compressed air reservoirs. The water drain valves may also have a ring.
2. Fill up the compressed air braking system.
3. Pull all the rings of the water drain valves out to the side. If large amounts of condensate have to be drained off repeatedly the air dryer must be checked

4.SERVICE PROCEDURE

4.1. EXPLODED VIEW OF THE AIR TANKS

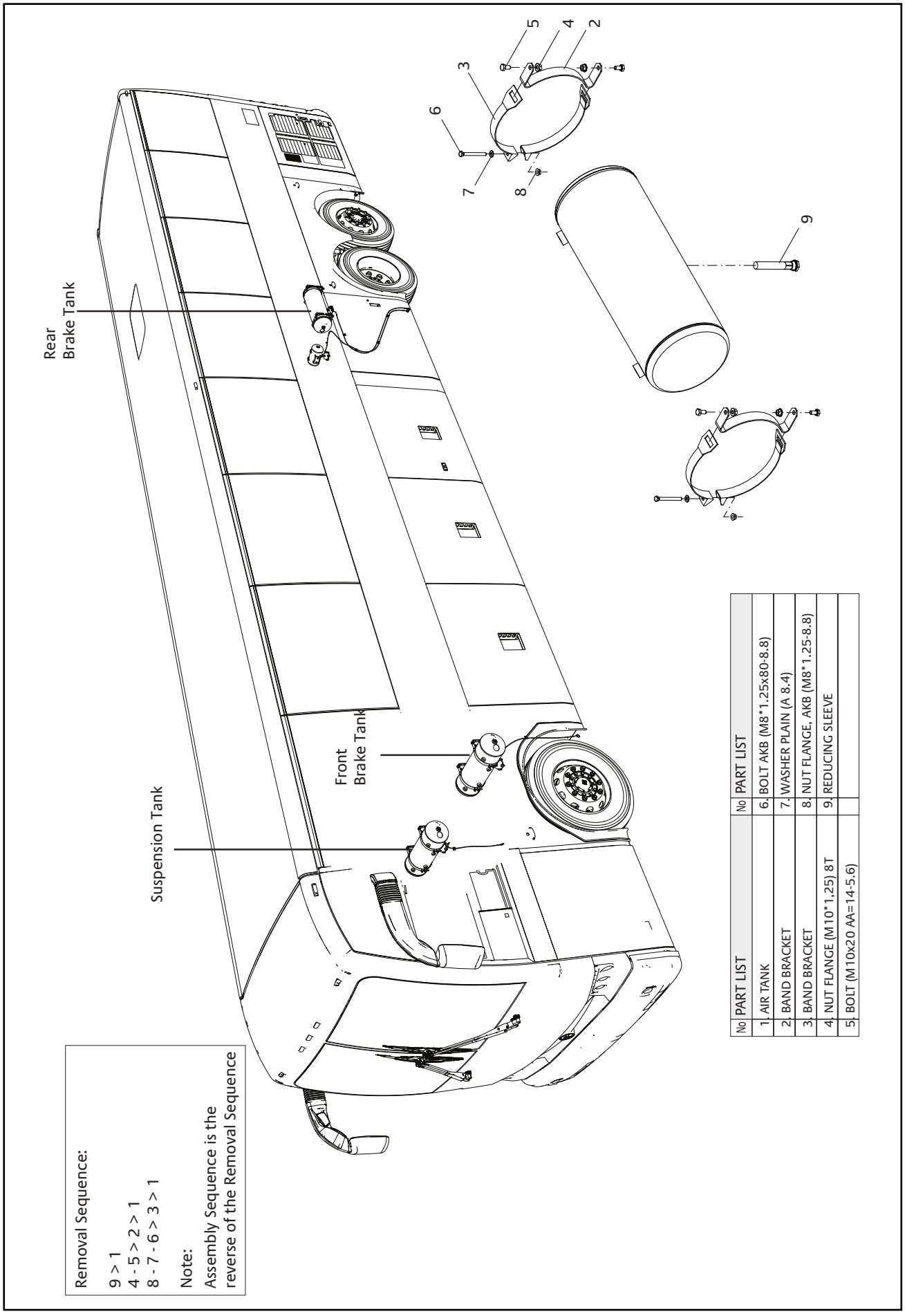

No	PART LIST	No	PART LIST
1.	AIR TANK	6.	BOLT AKB (M8*1.25x80-8.8)
2.	BAND BRACKET	7.	WASHER PLAIN (A 8.4)
3.	BAND BRACKET	8.	NUT FLANGE, AKB (M8*1.25-8.8)
4.	NUT FLANGE (M10*1,25) 8T	9.	REDUCING SLEEVE
5.	BOLT (M10x20 AA=14-5.6)		

Removal Sequence:

9 > 1
4 - 5 > 2 > 1
8 - 7 - 6 > 3 > 1

Note:
Assembly Sequence is the reverse of the Removal Sequence

5. TROUBLESHOOTING

FAULT	CAUSE	REMEDY
Air continually exhausts from the exhaust port when the compressor is in the standby mode	Air dryer check valve is worn	Replace check valve assembly
	Air dryer unloader valve seal is worn	Replace unloader valve assembly

FAULT	CAUSE	REMEDY
System air pressure drops rapidly	Fittings are loose or damaged	Tighten and/or replace as necessary
	Air tank, tubing, or hoses are damaged	Repair or replace as necessary
	Air dryer check valve is worn	Replace check valve assembly
	Air dryer unloader valve seal is worn	Replace unloader valve assembly

FAULT	CAUSE	REMEDY
The air compressor goes into the standby mode but cycles rapidly	Fittings are loose or damaged	Tighten and/or replace as necessary
	Air tank, tubing, or hoses are damaged	Repair or replace as necessary
	Air dryer check valve is worn	Replace check valve assembly
	Air dryer unloader valve seal is worn	Replace unloader valve assembly

FAULT	CAUSE	REMEDY
Safety valve opens	Air dryer check valve is blocked	Replace check valve assembly
	Air brake system is blocked down stream from the air dryer	Remove blockage or replace the necessary components
	Safety valve is malfunctioning	Replace safety valve

5. TROUBLESHOOTING

FAULT	CAUSE	REMEDY
Air flows from the exhaust port when the air compressor is trying to build up pressure	Unloader valve is worn	Replace unloader valve assembly
	Dirt/foreign material is stuck in unloader valve	Replace unloader valve assembly
	Heater assembly malfunctioning	Replace heater assembly

FAULT	CAUSE	REMEDY
Air compressor runs continuously (system pressure will not build)	Fittings are loose or damaged	Tighten and/or replace as necessary
	Air tank, tubing, or hoses are damaged	Repair or replace damaged items
	Air compressor needs to be serviced or replaced	Rebuild or replace air compressor
	Air dryer unloader valve seal is worn	Replace unloader valve assembly

FAULT	CAUSE	REMEDY
The air dryer does not unload when the air compressor goes into standby mode	Unloader valve is worn	Replace unloader valve assembly
	Ice has formed in unloader valve	Check heater assembly; replace with heater kit
	Heater malfunctioning	Check heater assembly; replace with heater kit
	Unloader valve sleeve is misaligned	Align unloader valve sleeve

FAULT	CAUSE	REMEDY
Water accumulation in air system (tanks)	Desiccant is contaminant	Replace desiccant cartridge
	Bleed valve is malfunctioning	Replace bleed valve assembly

16 EXHAUST SYSTEM

Rev.00 / 25.03.14

1. TOOLS **1**
2. DISASSEMBLY SEQUENCE **2**
3. REMOVING THE EXHAUST SYSTEM **3**
4. MUFFLER **6**
4.1. Exploded View Of The Muffler 6
5. TROUBLESHOOTING **7**

GENERAL

- If work is performed by people who do not have the necessary training to carry out the work or if this information is handled carelessly or totally ignored, this may result in severe injury and/or death. Inaddition, serious damage to the vehicle may occur.
- Always read the safety instructions in full before starting certain operations. The safety instructions stipulate which aspects must be considered to achieve maximum safety. The information is given that is very important for health and safety.
- Always work in adequately ventilated rooms with sufficient lighting, free from dirt and clutter. Never leave tools or parts lying around, keep away from (high-) voltage sources that present a risk of short-circuiting. Always wear protective clothing. Do not wear any damaged or loose-fitting clothing and remove jewelry before starting the work. In case of long hair use hairnet.

1. TOOLS

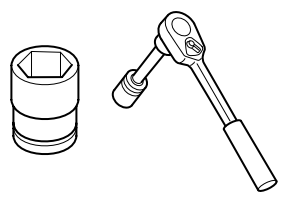	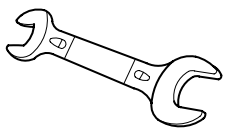	
Impact Socket	Open Wrench Double Ended	Double Ended Ring Spanner

2. DISASSEMBLY SEQUENCE

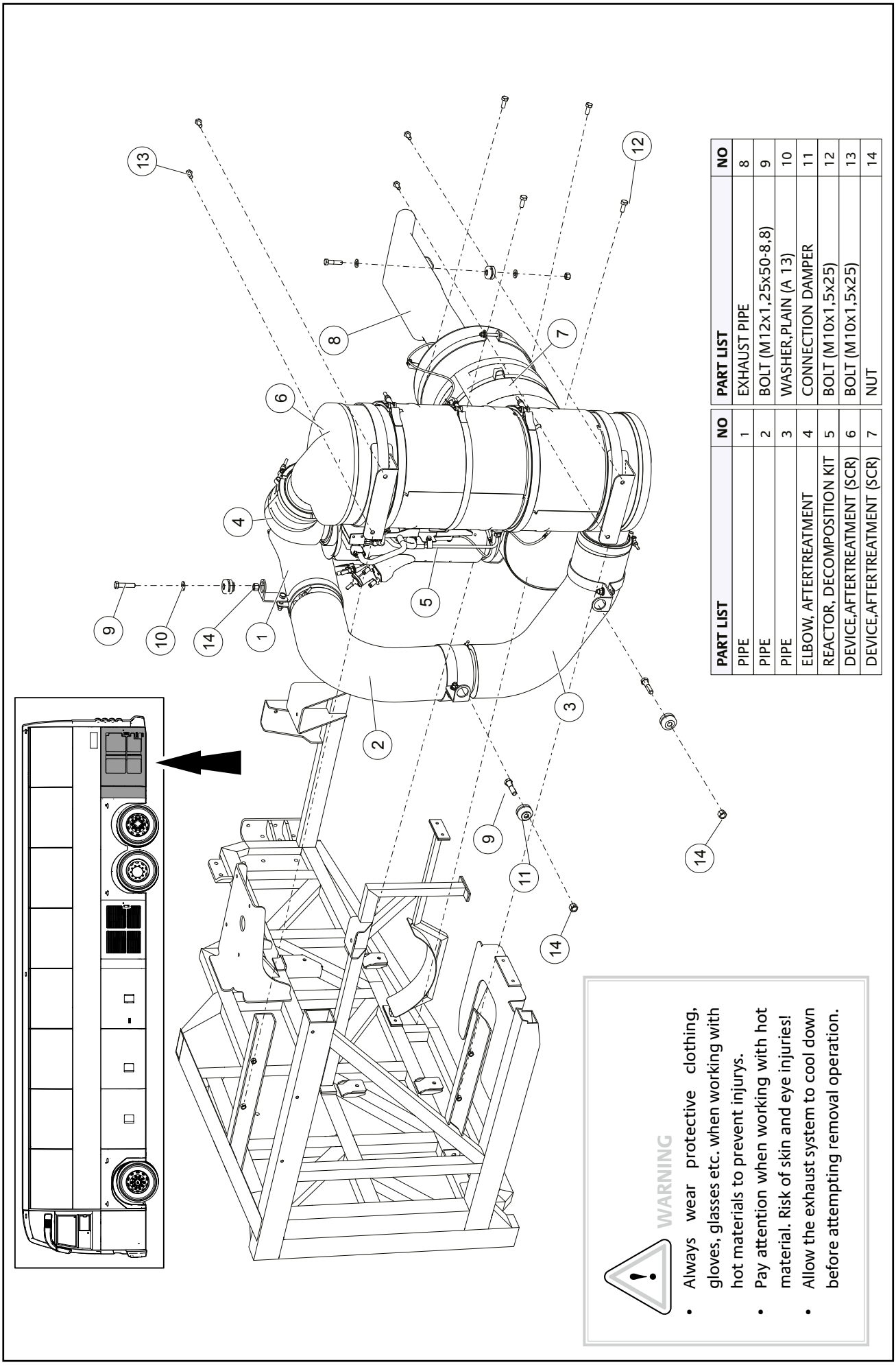

PART LIST	NO
PIPE	1
PIPE	2
PIPE	3
ELBOW, AFTERTREATMENT	4
REACTOR, DECOMPOSITION KIT	5
DEVICE,AFTERTREATMENT (SCR)	6
DEVICE,AFTERTREATMENT (SCR)	7

PART LIST	NO
EXHAUST PIPE	8
BOLT (M12x1,25x50-8,8)	9
WASHER,PLAIN (A 13)	10
CONNECTION DAMPER	11
BOLT (M10x1,5x25)	12
BOLT (M10x1,5x25)	13
NUT	14

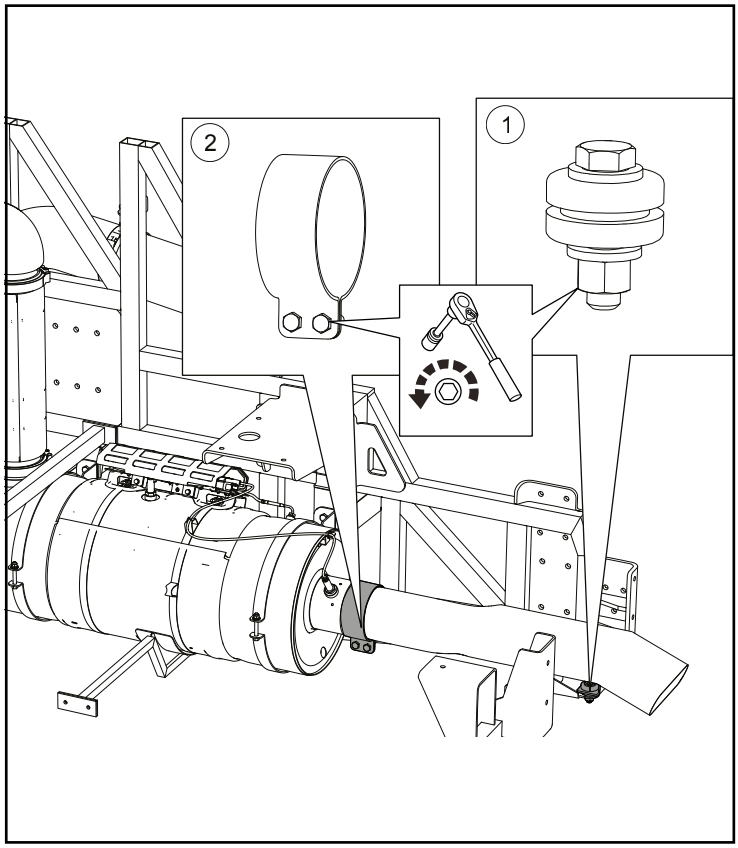

3. REMOVING THE EXHAUST SYSTEM

1. Loosen the exhaust output pipe connection bolts.

2. Disconnect the exhaust output pipe connection clamp.

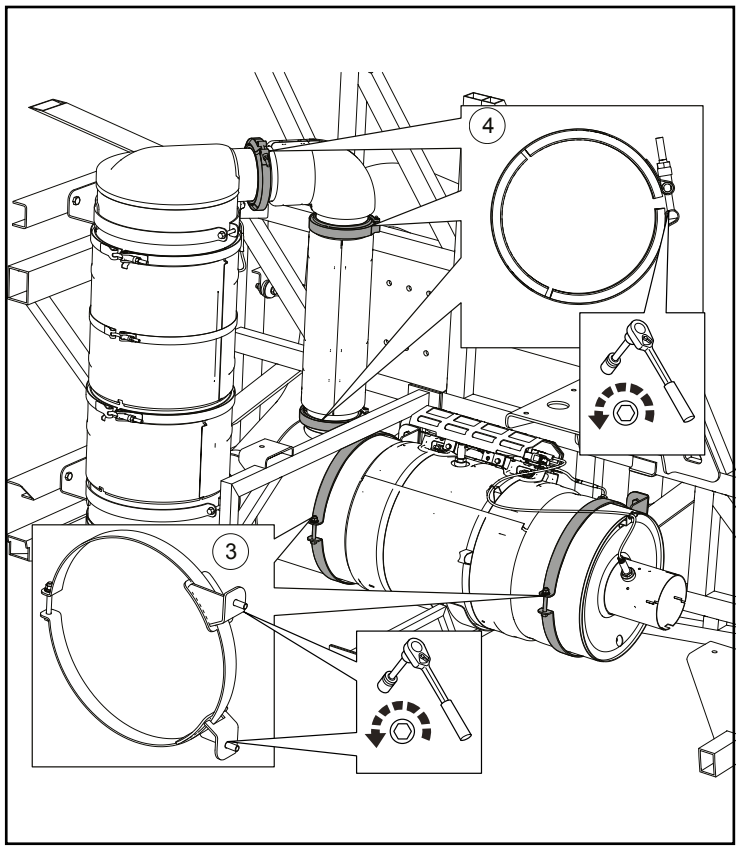

3. Unscrew clamp connection bolts hold muffler.

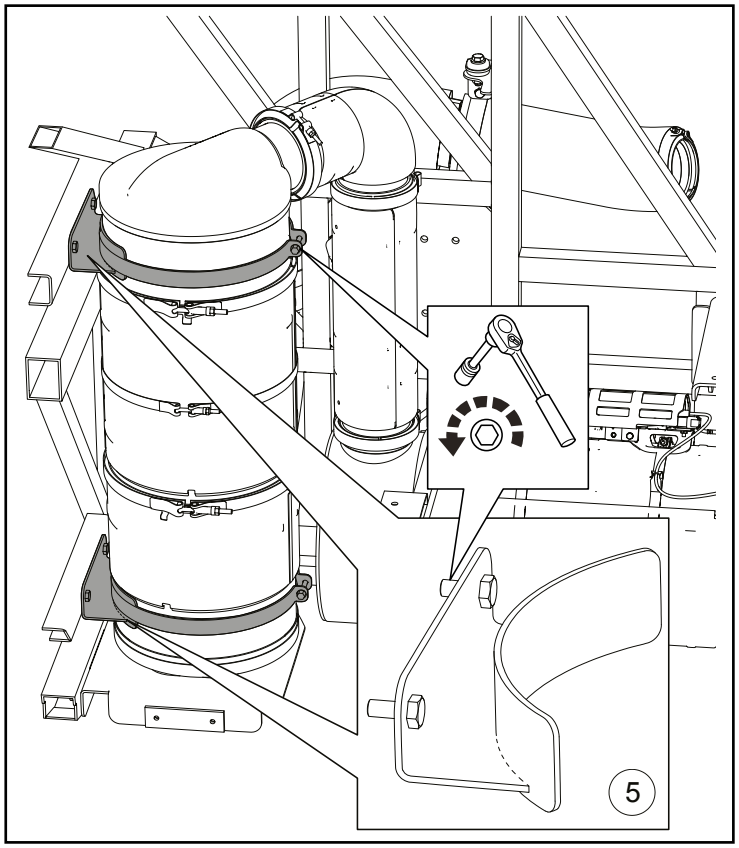

3. REMOVING THE EXHAUST SYSTEM

4. Disconnect the muffler pipe clamps.

5. Unscrew clamp connection bolts hold muffler.

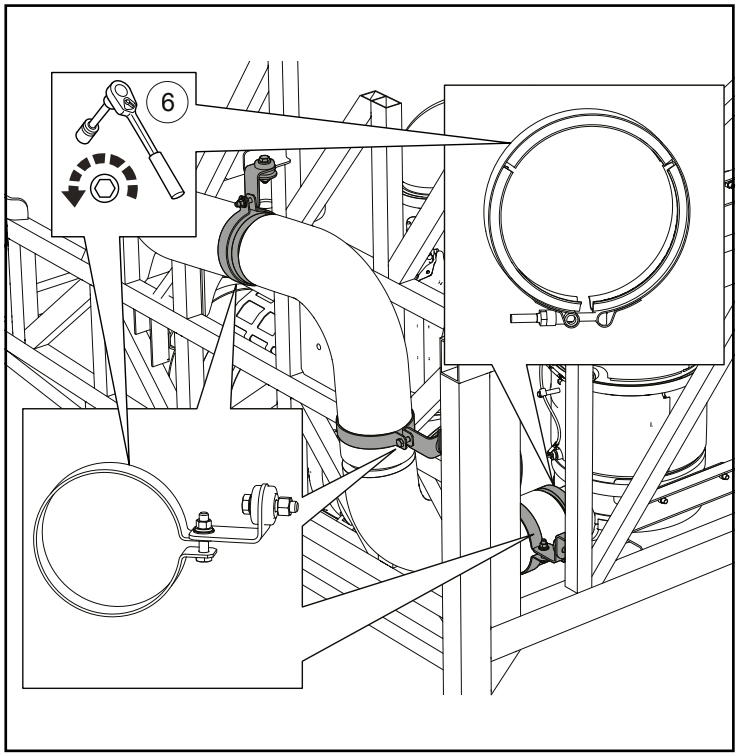

6. Disconnect the muffler pipe clamps.

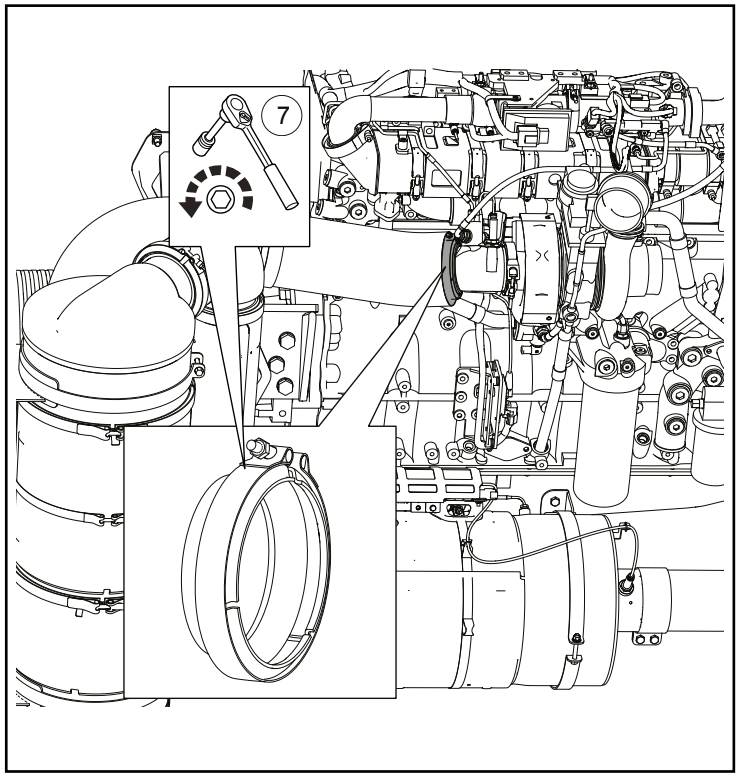

3. REMOVING THE EXHAUST SYSTEM

7. Disconnect the engine - exhaust connection clamp and remove the exhaust.

4. MUFFLER

4.1. EXPLODED VIEW OF THE MUFFLER

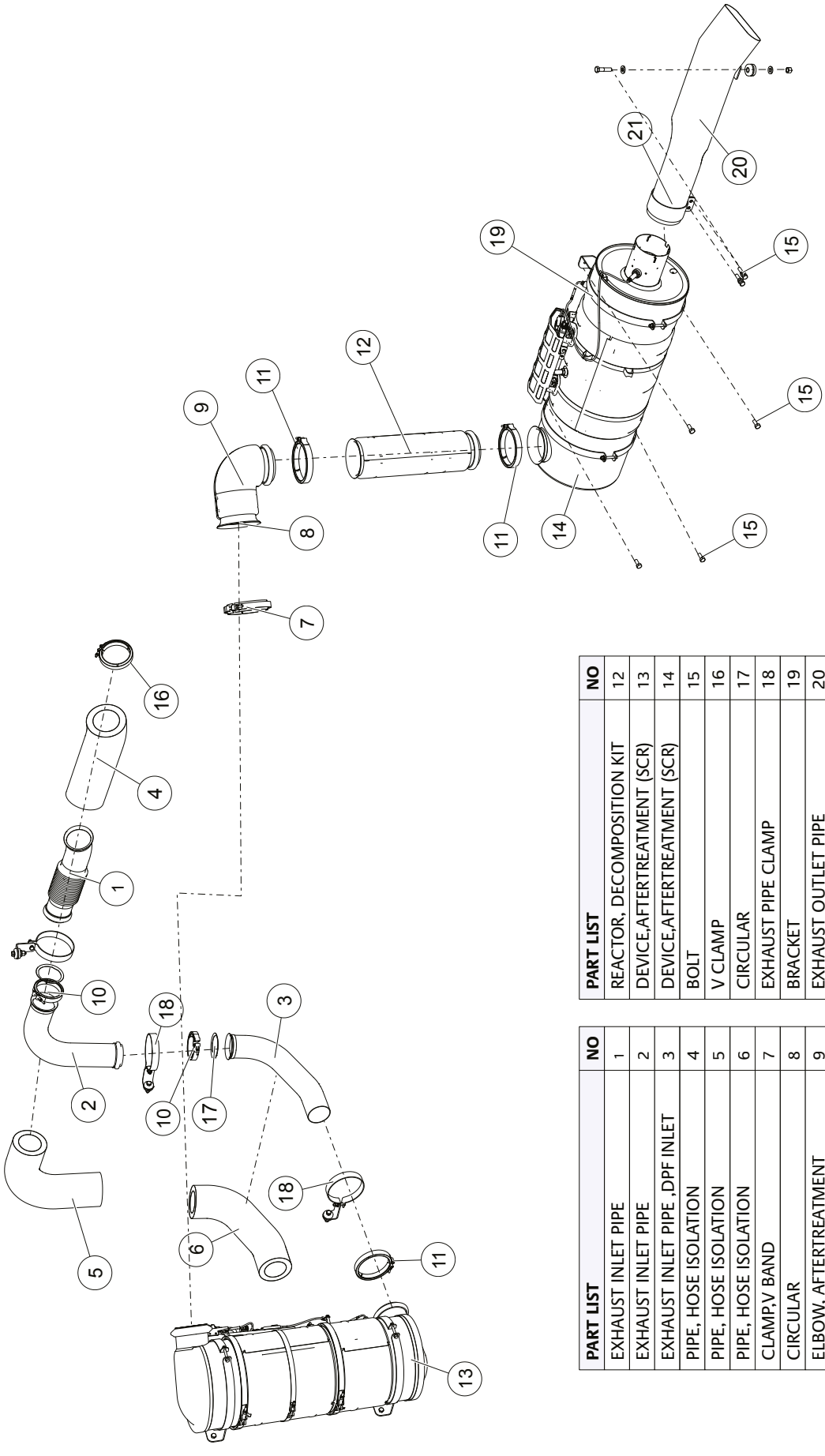

PART LIST	NO
EXHAUST INLET PIPE	1
EXHAUST INLET PIPE	2
EXHAUST INLET PIPE ,DPF INLET	3
PIPE, HOSE ISOLATION	4
PIPE, HOSE ISOLATION	5
PIPE, HOSE ISOLATION	6
CLAMP,V BAND	7
CIRCULAR	8
ELBOW, AFTERTREATMENT	9
CLAMP,V BAND	10
CLAMP,V BAND	11

PART LIST	NO
REACTOR, DECOMPOSITION KIT	12
DEVICE,AFTERTREATMENT (SCR)	13
DEVICE,AFTERTREATMENT (SCR)	14
BOLT	15
V CLAMP	16
CIRCULAR	17
EXHAUST PIPE CLAMP	18
BRACKET	19
EXHAUST OUTLET PIPE	20
EXHAUST OUTLET CLAMP	21

5. TROUBLESHOOTING

FAULT \ CAUSE	Front pipe/muffler/tail pipe deformed	Front pipe/muffler/tail pipe fitted poorly	Incorrect valve clearances	Head gasket defective	Wear/carbon deposits on valves and valve seats	Valve spring weakened	Piston rings worn/damaged	Piston ring grooves worn/damaged	Cooling system malfunctioning	Engine oil quantity excessive	Major moving parts seized	Uneven or excessive fuel injection
Black exhaust gas			X	X	X	X			X		X	X
White exhaust gas							X	X		X		
Excess oil consumpion							X	X				
Abnormal noise or vibration in intake / exhaust system	X	X										

17 AIR CONDITIONING & COMPRESSOR

Rev.00 / 25.03.14

1. TOOLS 2

2. STRUCTURE AND OPERATION 3

2.1. General Information 3

2.2. Air Conditioner Unit Components 4

2.3. Checks Before Starting 5

2.4. Checks Before Starting – Compressor 6

2.5. Start-Up Procedure 6

2.6. Replacing Coolant And Cleaning Cooling System 7

2.6.1 Cooling Gas (134A) Discharging And Charging 7

2.7. Charging Additional Refrigerant 9

2.8. A/C Coolant Pipe Line 11

2.9. A/C Water Drain Line 12

3. SERVICE PROCEDURE 13

3.1. Exploded View Of The Air Conditioner 13

3.2 Exploded View Of The A/C Compressor 14

3.3. Removing The A/C V-Belt And Compressor 15

3.4. Electro-Magnetic Clutch 18

3.4.1 Removing The Electro-Magnetic Clutch 18

3.4.2 Installation Of The Electro-Magnetic Clutch 19

4. TROUBLESHOOTING 21

4.1. Suction Pressure Too Low, Discharge Pressure Too Low To Normal 22

4.2. Suction Pressure Normal, Discharge Pressure Too High 23

4.3. Suction Pressure Too High, Discharge Pressure Too Low To Normal 24

4.4. Suction Pressure Too High, Discharge Pressure Too High 24

4.5. Other Malfunctions 25

GENERAL

- If work is performed by people who do not have the necessary training to carry out the work or if this information is handled carelessly or totally ignored, this may result in severe injury and/or death. Inaddition, serious damage to the vehicle may occur.
- Always read the safety instructions in full before starting certain operations. The safety instructions stipulate which aspects must be considered to achieve maximum safety. The information is given that is very important for health and safety.
- Always work in adequately ventilated rooms with sufficient lighting, free from dirt and clutter. Never leave tools or parts lying around, keep away from (high-) voltage sources that present a risk of short-circuiting. Always wear protective clothing. Do not wear any damaged or loose-fitting clothing and remove jewelry before starting the work. In case of long hair use hairnet.

1. TOOLS

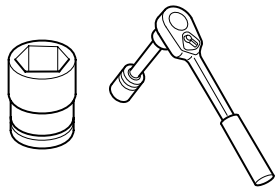 Impact Socket	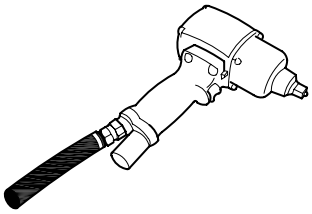 Impact Wrenches	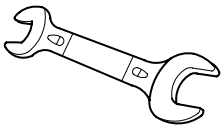 Open Wrench Double Ended
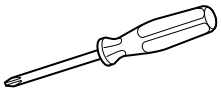 Screw Driver	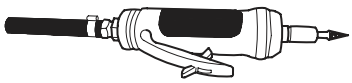 Sonic	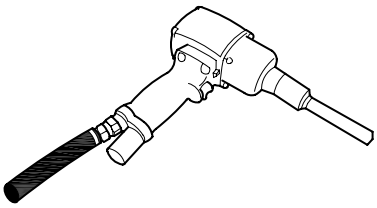 Drill
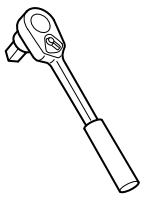 Rachet Lever	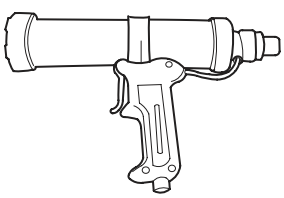 Sealer Machine	



CAUTION

All work on the air condition system should only be carried out by authorized air condition personnel.

2. STRUCTURE AND OPERATION

2.1. GENERAL INFORMATION

SUTRAK 2800 AC 136 (with roof heater) air conditioner unit and SAFKAR 2800 compact (with roof heater) air conditioner unit are installed.

- The efficient performance of the air-conditioning unit is dependent upon a proper maintenance and function-test. A visual inspection and function test by the driver, before any performance, will avoid expensive repairs. Small faults are often responsible for big repairs. The working reliability of the air-conditioning unit, depents upon regular maintenance.
- To keep the air conditioning units functional even in periods when it is not used, visual inspection and function tests have to be performed. If the air-conditioning units are not used for longer terms, for example in the winter time and cold periods, the air-conditioning unit must be operated at least once a month, for a minimun of 30 minutes. This operating prevents gaskets and bearings on the compressor drying out. Only while the air-conditioning units are in operation, the compressor will be lubricated by it's own oil-pump. To operate the units in winter time, the inside temperature has to be higher than 24 °C (Therefore the passenger compartment has to be heated up if necessary.)
- Once a year before the season starts, a service inspection by a specialist, is recommended for a reliable operation during the whole season.
- During operation, all moving parts are guarded to prevent accidents. When carrying out checks before starting work, during daily inspections and maintenance work, moving parts may be exposed. An adequate distance must be maintained from these parts when the air condition is in operation and the main switch is in the "ON" position.
- Thin metal sheets have been applied to the evaporator and condenser piping, these can cause cuts if touched with the hand.
- The coolant used in the cooling circuits of air conditioning can freeze on contact with skin and cause severe burns.



CAUTION

Should liquid coolant get into the eyes, immediately rinse with water and seek medical help. Liquid coolant can cause blindness if it gets into the eyes.

CAUTION

Health risk!

- Do not inhale air conditioner refrigerant.
- Use mask and gloves during service application.
- Do not discharge refrigerant in closed area.

WARNING

- All work on the air condition system should only be carried out by authorized air condition personnel.
- Protective gloves must be worn at all times when working on the air condition.

2.2. AIR CONDITIONER UNIT COMPONENTS

- Condenser Unit
- Evaporator Unit
- Compressor
- Liquid Tank (Receiver)
- Filter Drier
- Condenser Fans
- Evaporator Fans
- Heating Heat Exchanger
- Sight Glass

Refrigerant (R 134a)

R 134a coolant is used for all air conditioner applications.

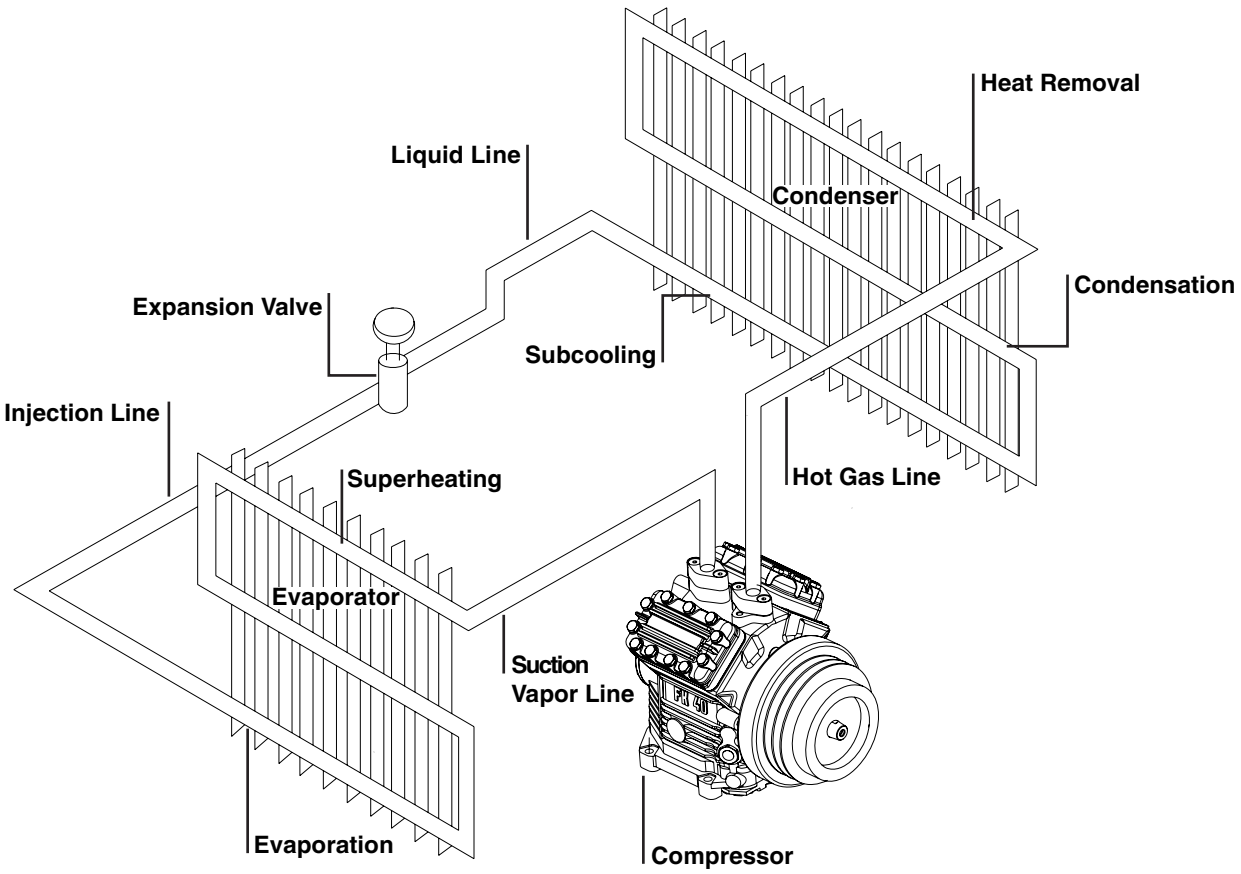

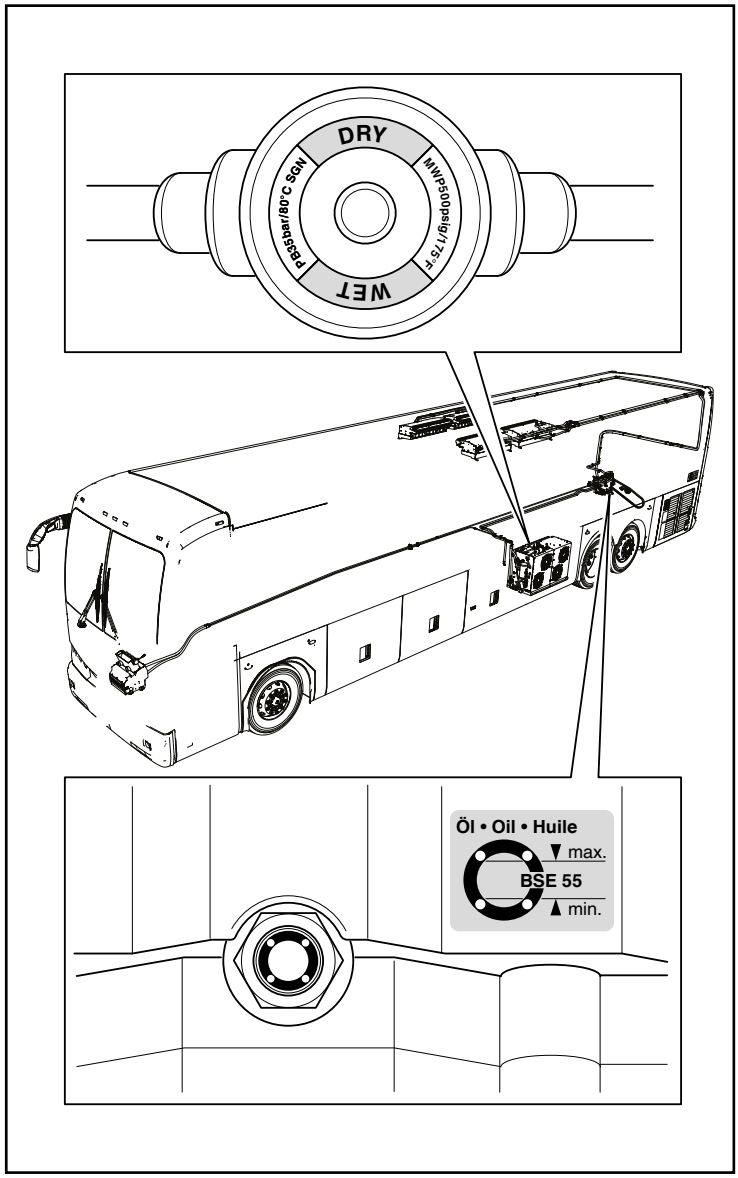

2.2. AIR CONDITIONER UNIT COMPONENTS

Sight Glass

A sight glass is provided enabling the refrigerant flow to be checked. Due to the fact that the refrigerant is colorless, no liquid flow can be seen in the sight glass if the refrigerant is adequately sub-cooled. If the refrigeration system is completely evacuated, no refrigerant can be seen in the sight glass either. A pressure test also serves to verify the refrigerant charge. If no sub-cooling exists before the expansion valve, i.e. if the refrigerant contains vapor bubbles, this can be identified by bubbling in the sight glass.

2.3. CHECKS BEFORE STARTING

Oil level (within range on sight glass when exchanging a compressor):

- Setting and function of safety and protection device.
- Delay time of differential oil pressure switch (if installed).
- Cut-out pressures of the high- and low-pressure limiters.
- Are the shut-off valves opened?
- Start-up procedure Lubrication/oil check.
- Bring plant up to operating temperature via increased dry-running speed.
- Check lubrication of the compressor after approx. 15 minutes.
- Oil level 14% height of sight glass (repeat checks within the first hours of operation).

Check oil pressure if necessary:

1. Using a manometer via the service connection of the suction shut-off valve and the connection at the oil pump.
2. Differential oil pressure (permissible values): 0.7 to 3.5 bar.
3. Automatic monitoring by differential oil pressure switch, if installed. Connect “oil pressure” to valve “LP” to crankcase. Differential cut-out pressure 0.65 bar, time delay 90 sec. When this device cuts out a subsequent fault diagnosis of the system is required. Observe information in the description of the differential oil pressure switch!

CAUTION

- Oil is already in the system, therefore it may be necessary to drain a part of the oil charge. If there are large quantities of oil in the circuit (possibly from preceding compressor damage), there is also a risk of liquid slugging at start. Adjust oil level within the marked sight glass range.
- If larger quantities of oil have to be added: Danger of liquid slugging! Check the oil return.

WARNING

- Ensure that motor cannot be started while carrying out maintenance work!
- Hair, hands or clothing can be caught in the belt drive or coupling!
- Serious injuries are possible.



CAUTION

Oil is already in the system, therefore it may be necessary to drain a part of the oil charge. If there are large quantities of oil in the circuit (possibly from preceding compressor damage), there is also a risk of liquid slugging at start. Adjust oil level within the marked sight glass range!

2.3. CHECKS BEFORE STARTING

For any working on the compressor after the plant has commissioned:

Compressor is under-pressure! Incase of improper handling serious injuries are possible. Release the pressure in the compressor! Wear safety gloves!

The coupling must be secured with a separating cover (belt or coupling protection)!

2.4. CHECKS BEFORE STARTING – COMPRESSOR

1. Oil level within range on sight glass when exchanging a compressor.
2. Setting and function of safety and protection devices.
3. Delay time of differential oil pressure switch (if installed).
4. Cut-out pressures of the high- and low-pressure limiters.
5. Are the shut-off valves opened?



WARNING

Ensure that motor cannot be started while carrying out maintenance work! Hair, hands or clothing can be caught in the belt drive or coupling! Serious injuries are possible.



CAUTION

Danger of liquid slugging! Check the oil return.

2.5. START-UP PROCEDURE

Lubrication / oil check

1. Bring compressor up to operating temperature via increased dry-running speed.
2. Check lubrication of the compressor after approximately 15 minutes. Oil level 14% height of sight glass (repeat checks within the first hours of operation).
3. Check oil pressure if necessary: using a manometer via the service connection of the suction shut-off valve and the connection at the oil pump. Differential oil pressure (permissible values): 0.7 to 3.5 bar Automatic monitoring by differential oil pressure switch, if installed.
4. Connect “oil pressure” to Schrader valve “LP” to crankcase Differential cut-out pressure 0.65 bar, time delay 90 sec. When this device cuts out a subsequent fault diagnosis of the system is required.
5. Observe information in the description of the differential oil pressure switch! If larger quantities of oil have to be added.

2.6. REPLACING COOLANT AND CLEANING COOLING SYSTEM

2.6.1 COOLING GAS (134A) DISCHARGING AND CHARGING

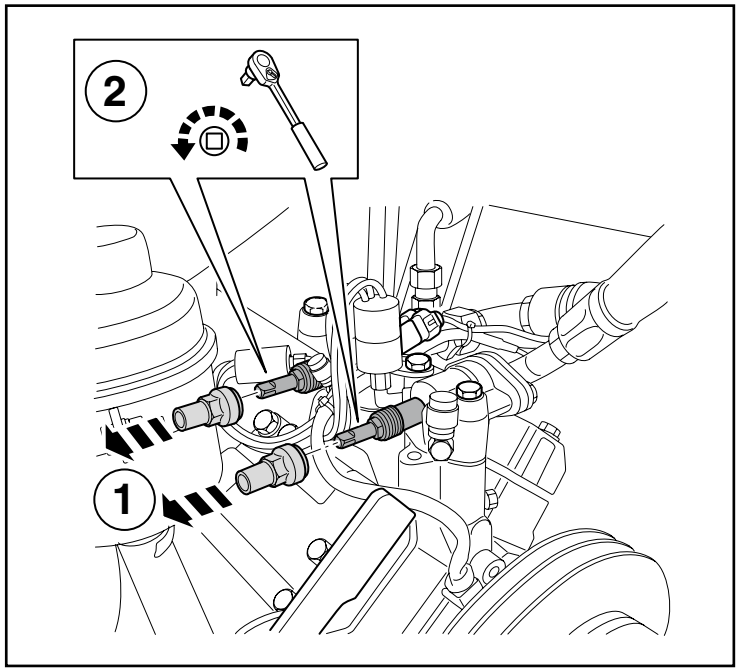

1. Remove the caps from the valves.
2. Turn off the valves by turning clockwise.

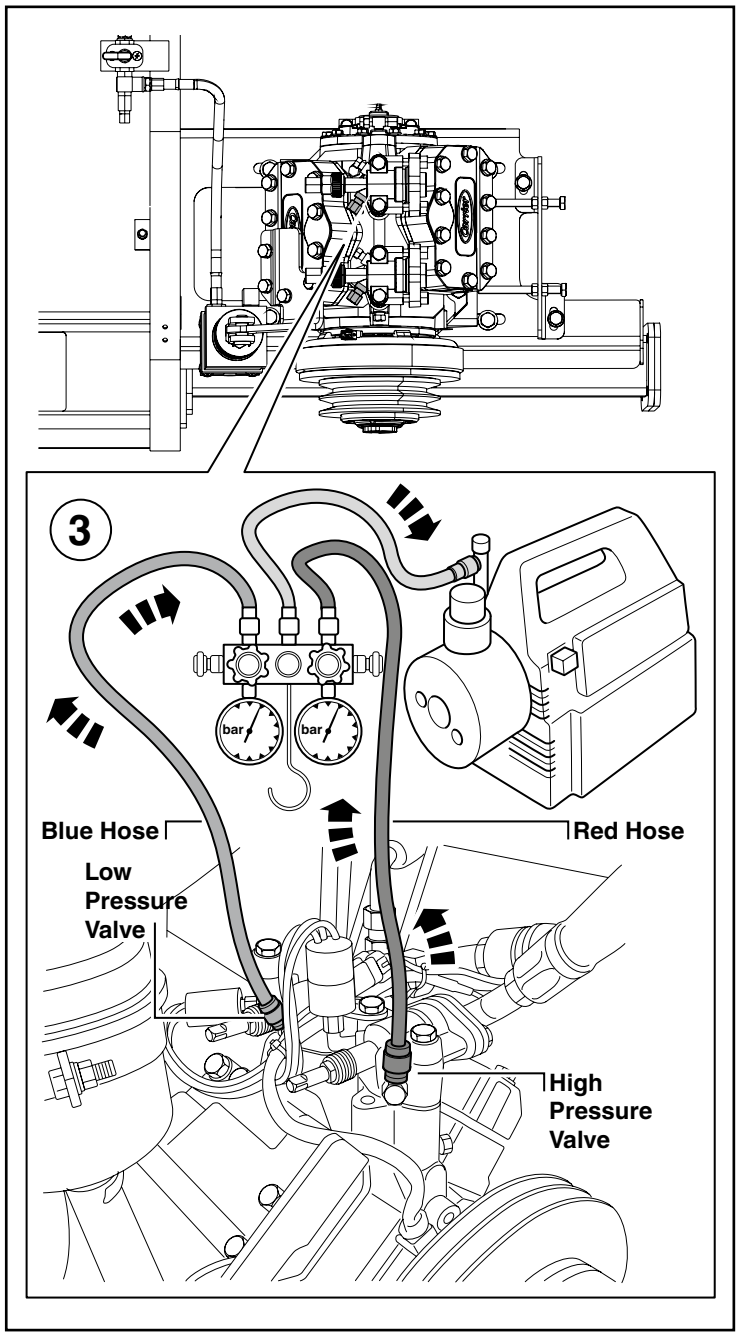

3. Compressor air is discharged with vacuum pump. Air is discharged by blue hose (low pressure section). Blue hose is only used for discharging. Discharging of compressor air takes approximately 1 hour. Discharging is continued until both valves have reached 0 bar.

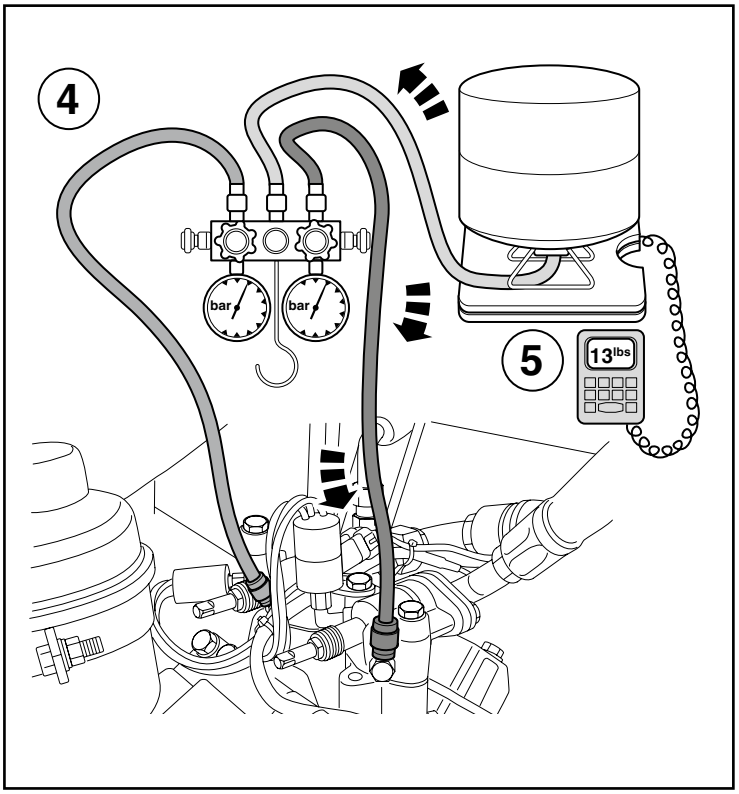

2.6.1 COOLING GAS (134A) DISCHARGING AND CHARGING

4. Manometre and Gas (R134a) tube are connected. Gas is transmitted to the compressor by opening the red valve (high pressure valve). Low pressure valve (blue valve) should not be open when charging it is only used for discharging.
5. Gas (R134a) value is 30 lbs inside the Tube. Gas (R134a) is charged until value has reached 13 lbs. This value can be measured by the scale which is shown in the table below.

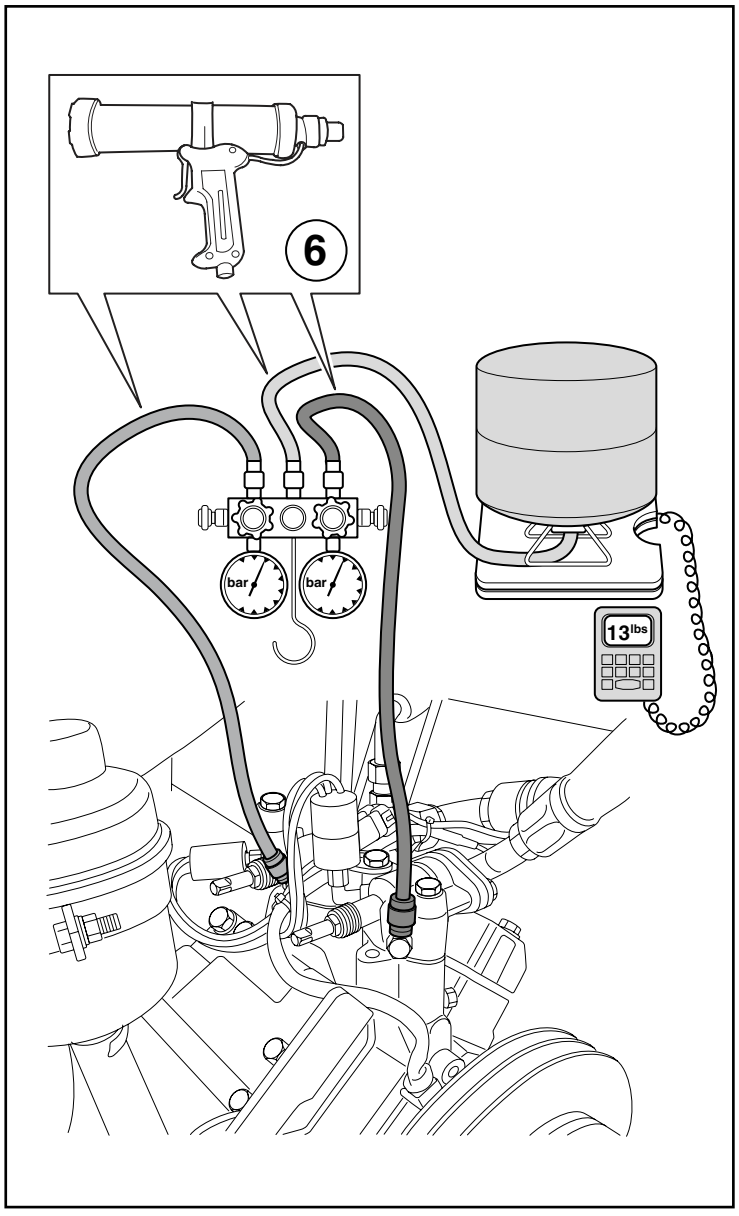

6. If necessary the tubes can be heated so the cold gas (R134a) can be sent more efficiently.

Enviromental Condition	Suction Pressure (PSI)	Discharge Pressure (PSI)
77°F (25°C)	18 (1.034 bar)	200 (13.78 bar)
86°F (30°C)	20 (1.37 bar)	220 (15.16 bar)
95°F (35°C)	30 (2.06 bar)	240 (16.54 bar)

2.7. CHARGING ADDITIONAL REFRIGERANT

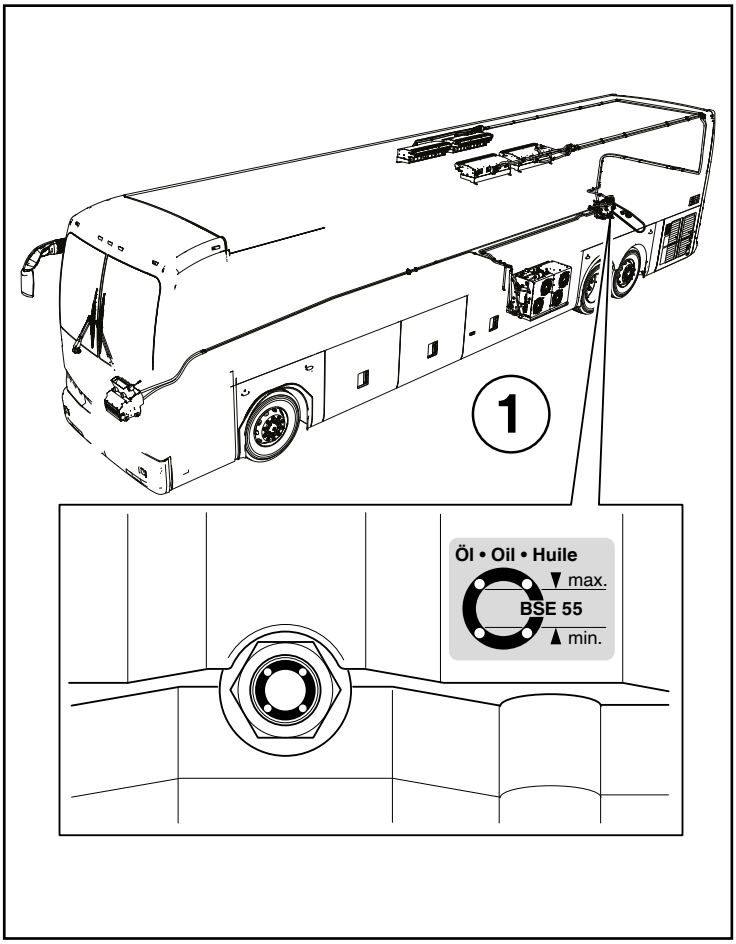

Before refrigerant is charged:

1. Check the compressor oil level. Do not switch on the compressor!

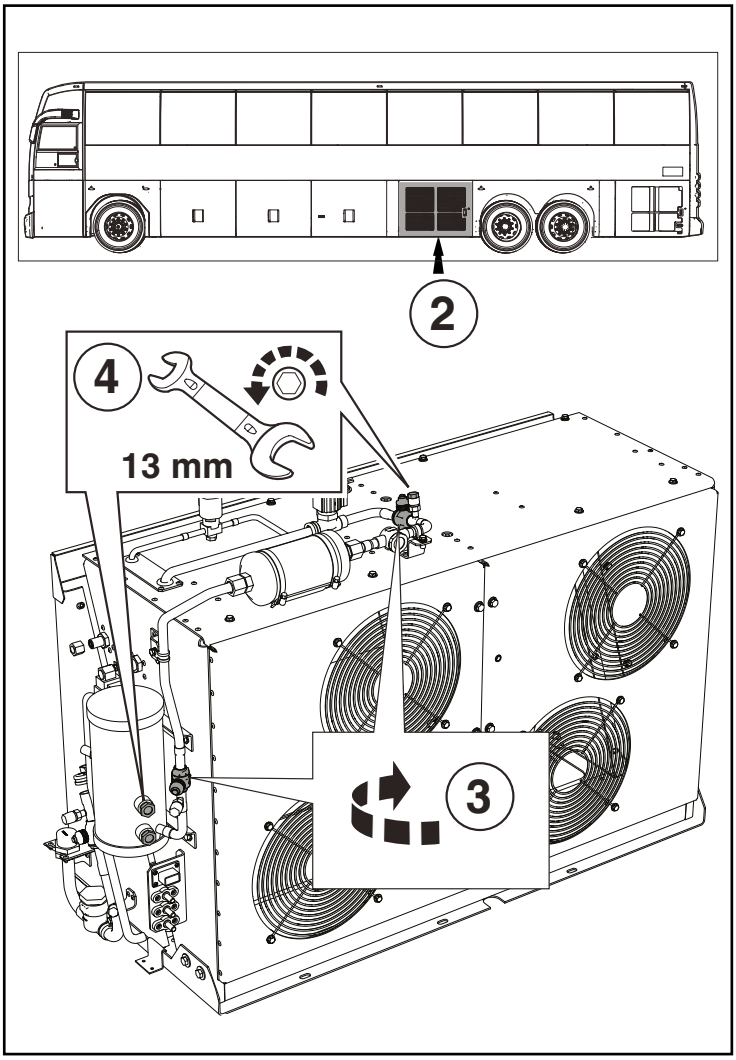

2. Remove cap manually.
3. Turn off valve manually.
4. Remove the 2 nuts (tool size: 13 mm) at the front and the back with open wrench.

CAUTION

Danger of wet operation! Charge small amounts at a time! Keep the oil temperature above 104°F. Explosion risk of components and pipelines by hydraulic over pressure. Absolutely avoid over charging of the system with refrigerant!

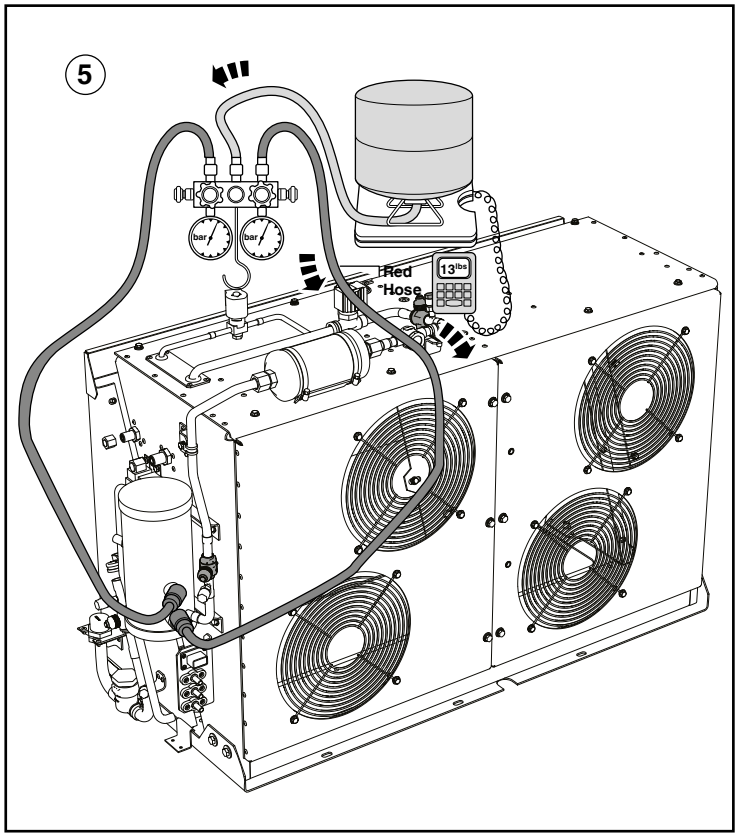

2.7. CHARGING ADDITIONAL REFRIGERANT

5. Connect red hose to the valve to charge liquid refrigerant directly into the condenser receiver respectively. After commissioning it may be necessary to add refrigerant. Charge the refrigerant from the suction side while the compressor is in operation. Charge preferably at the evaporator inlet. Gas (R134a) value is 30 lbs inside the Tube. Gas (R134a) is charged until value has reached 13 lbs. This value can be measured by the scale which is shown in the figure.

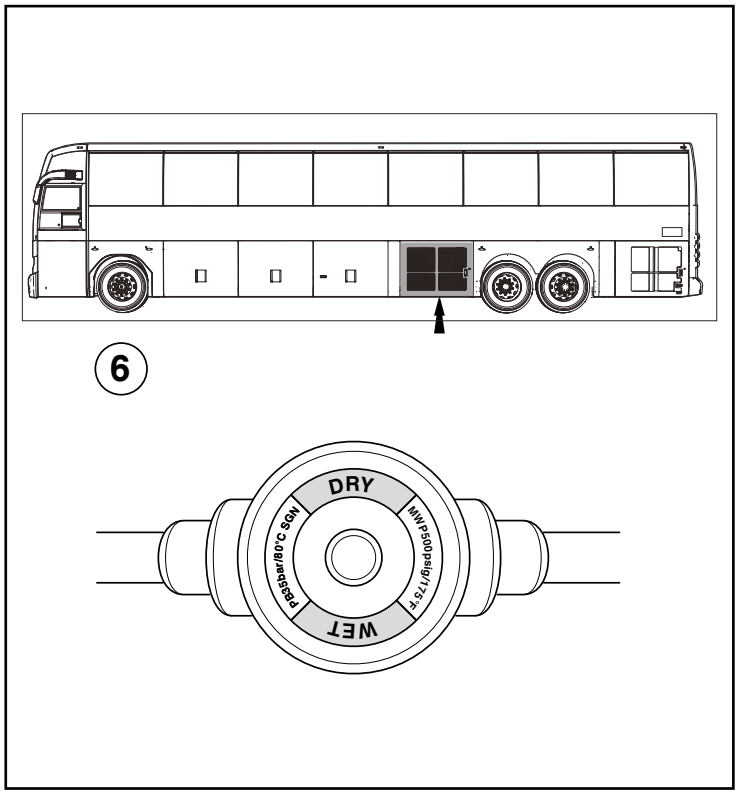

6. Check gas level in sight glass. A sight glass is provided enabling the refrigerant flow to be checked. Due to the fact that the refrigerant is colorless, no liquid flow can be seen in the sight glass if the refrigerant is adequately sub-cooled. If the refrigeration system is completely evacuated, no refrigerant can be seen in the sight glass either. A pressure test also serves to verify the refrigerant charge. If no sub-cooling exists before the expansion valve, i.e. if the refrigerant contains vapor bubbles, this can be identified by bubbling in the sight glass.

Note:
Installation sequense is the reverse order of removal sequence.

2.8. A/C COOLANT PIPE LINE

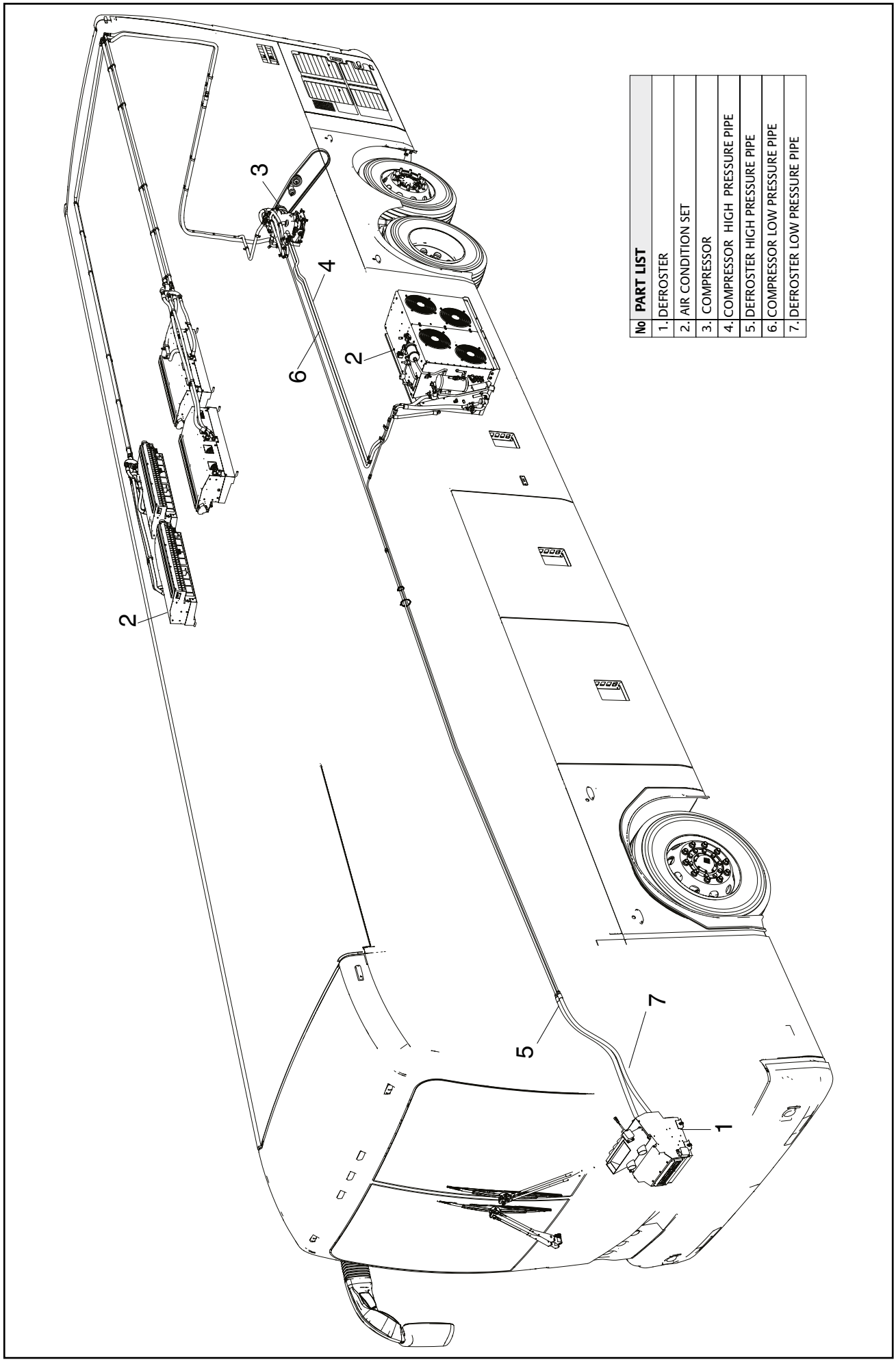

2.9. A/C WATER DRAIN LINE

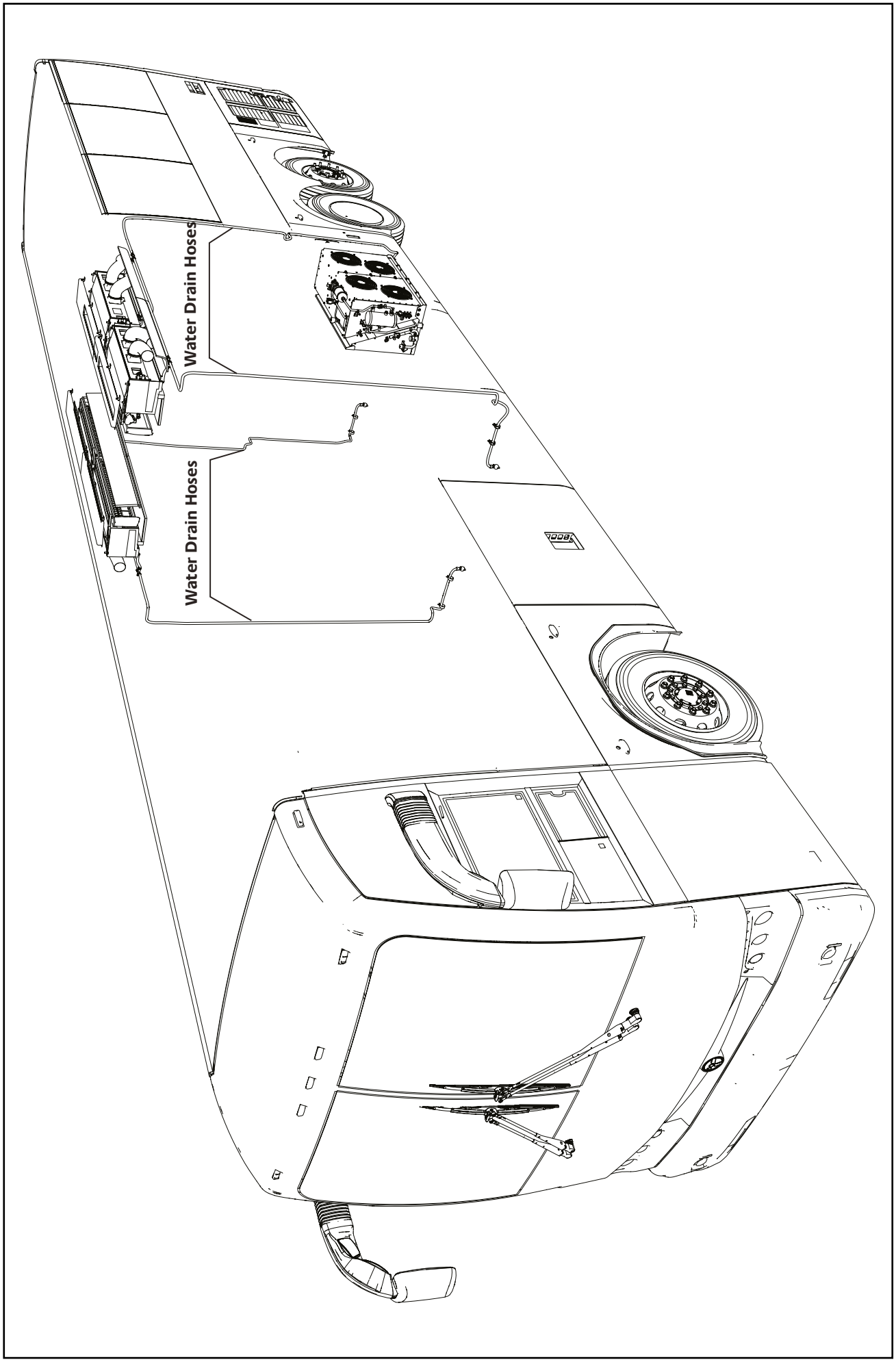

3. SERVICE PROCEDURE

3.1. EXPLODED VIEW OF THE AIR CONDITIONER

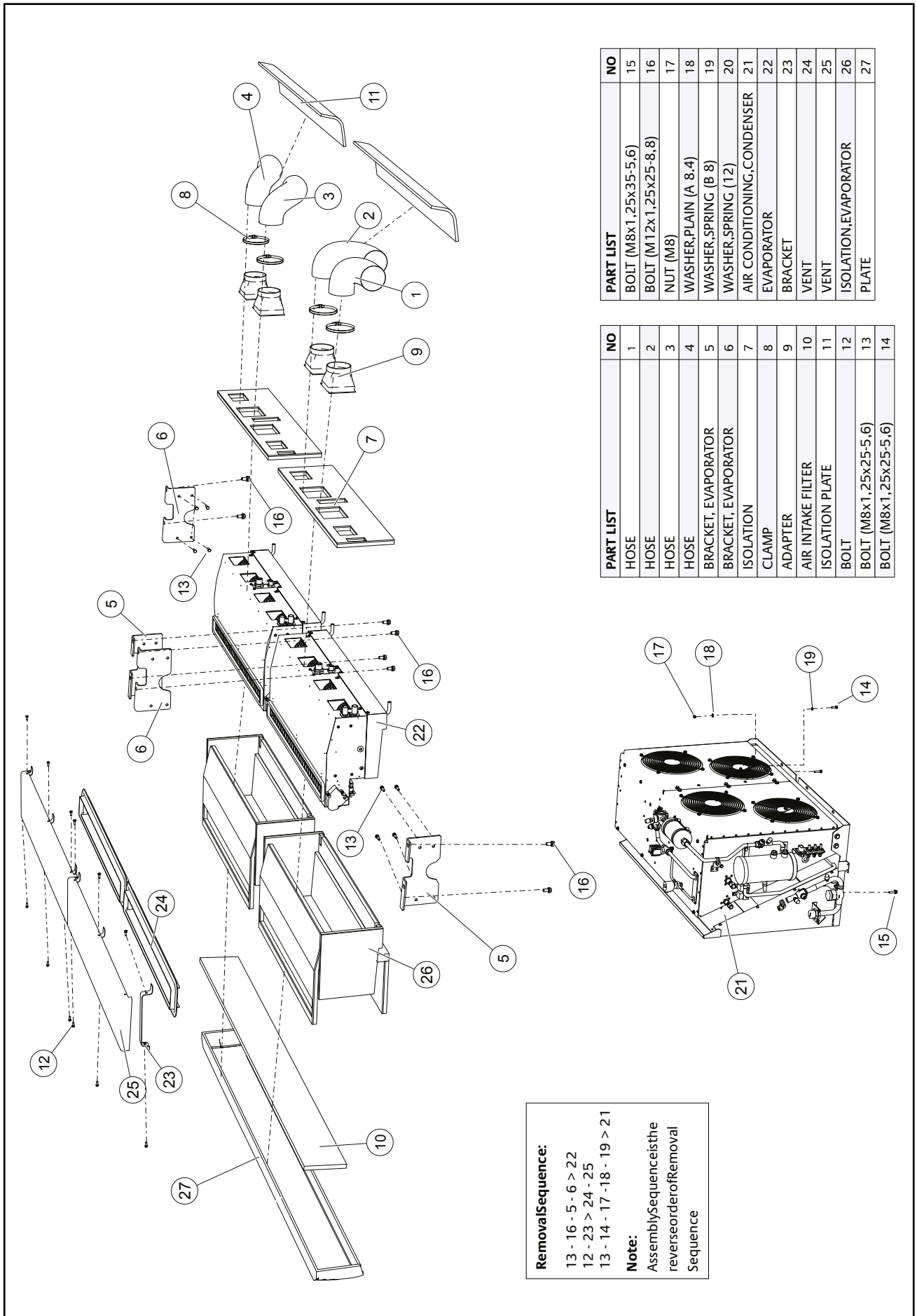

NO	PART LIST
1	HOSE
2	HOSE
3	HOSE
4	HOSE
5	BRACKET, EVAPORATOR
6	BRACKET, EVAPORATOR
7	ISOLATION
8	CLAMP
9	ADAPTER
10	AIR INTAKE FILTER
11	ISOLATION PLATE
12	BOLT
13	BOLT (M8x1,25x25-5,6)
14	BOLT (M8x1,25x25-5,6)

NO	PART LIST
15	BOLT (M8x1,25x35-5,6)
16	BOLT (M12x1,25x25-8,8)
17	NUT (M8)
18	WASHER,PLAIN (A 8.4)
19	WASHER,SPRING (B 8)
20	WASHER,SPRING (12)
21	AIR CONDITIONING,CONDENSER
22	EVAPORATOR
23	BRACKET
24	VENT
25	VENT
26	ISOLATION,EVAPORATOR
27	PLATE

RemovalSequence:

13 - 16 - 5 - 6 > 22
12 - 23 > 24 - 25
13 - 14 - 17 -18 - 19 > 21

Note:
AssemblySequenceisthe reverseorderofRemoval Sequence

3.2 EXPLODED VIEW OF THE A/C COMPRESSOR

RemovalSequence:

6 - 9 - 11 - 13 > 22 > 18
5 - 7 - 11 - 13 > 23
4 - 12 > 1

Note:
AssemblySequenceisthe reverseorderofRemoval Sequence

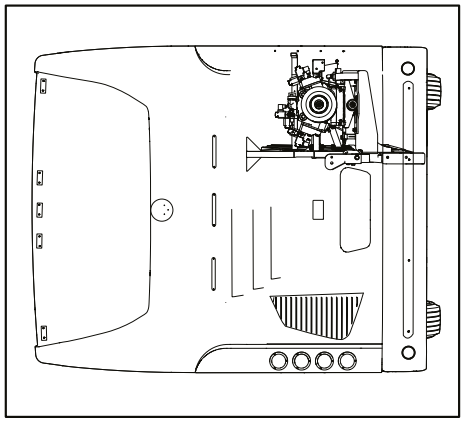

NO	PART LIST
15	CLIP (8)
16	PUSH-IN MALE :M16 TUBE:8mm (5/16")
17	ELBOW M16/M16
18	COMPRESSOR,BITZER 6UFCY_6NFCY
19	CONTROL VALVE
20	CONTROL VALVE
21	AIR SYSTEM HOSE
22	BRACKET
23	BRACKET
24	RUBBER COVER
25	GREASE COVER
26	WASHER
27	STRAIGHT STUD COUPLING (8x14)

NO	PART LIST
1	DAMPER
2	BELLOWS (CONTITECH SZ 35-11)
3	BOLT (M12x1,25x70-8.8)
4	BOLT (M8X12)
5	BOLT (M8x1.25x20)
6	BOLT (M12x1,25x40-8.8)
7	BOLT (M12x1,25x50-8.8)
8	BOLT (M6x1x40-5.6)
9	NUT (M12x1,25-5.6)
10	WASHER,PLAIN (A 8.4)
11	WASHER,PLAIN (A 13)
12	WASHER,SPRING (B 8)
13	WASHER,SPRING (12)
14	SCREW (M5.5X13)

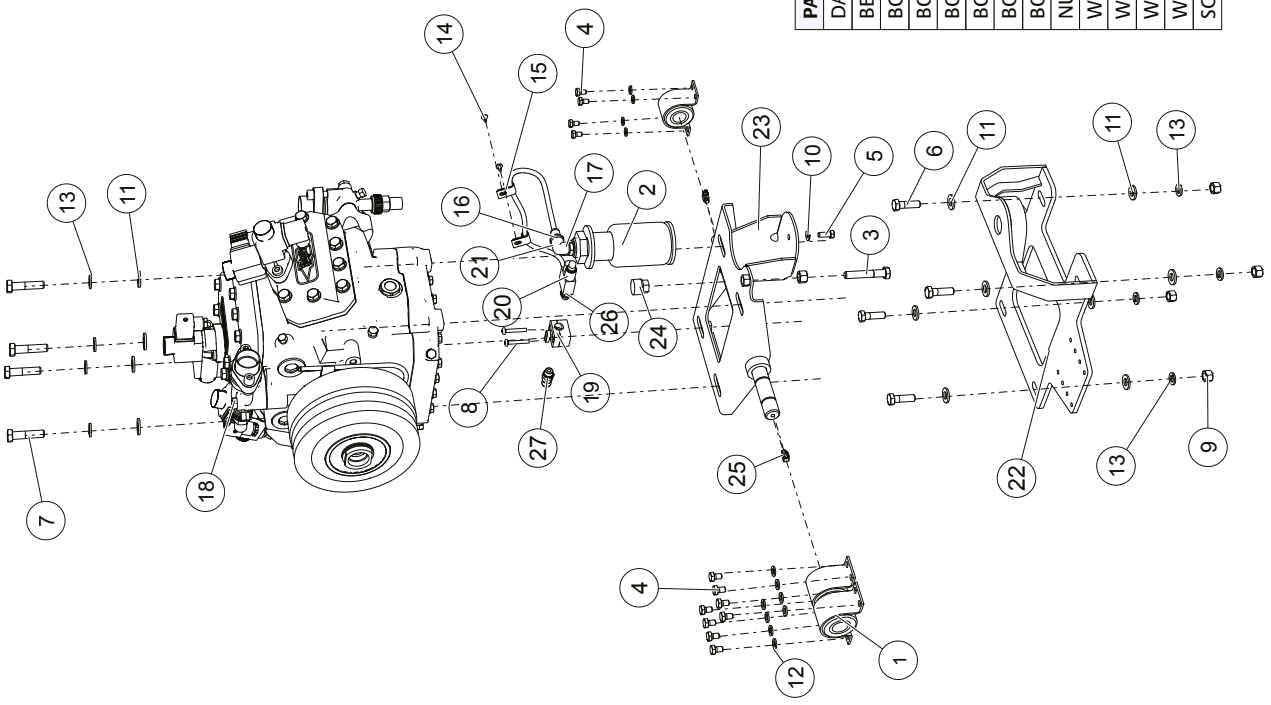

3.3. REMOVING THE A/C V-BELT AND COMPRESSOR

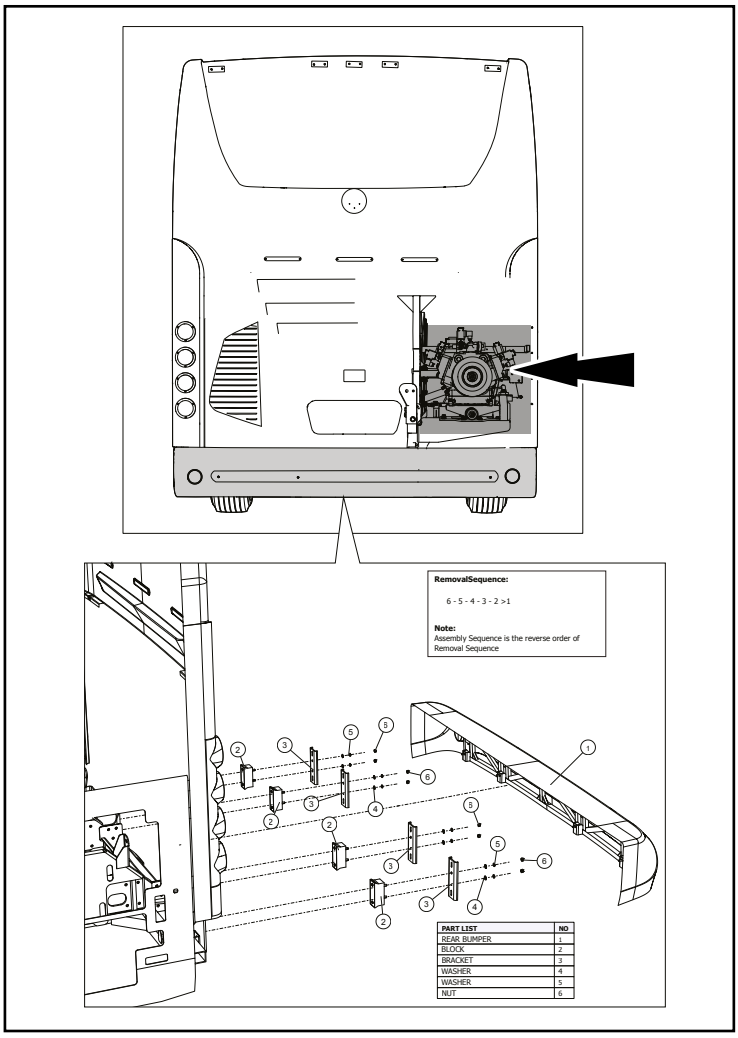

WARNING

- Turn the starter switch to off position.
- Disconnect the battery negative (-) terminal.
- Discharge the coolant.

1. Remove rear bumper.
2. Unscrew 8 bolts (tool size: 10 mm) and remove belt guard.

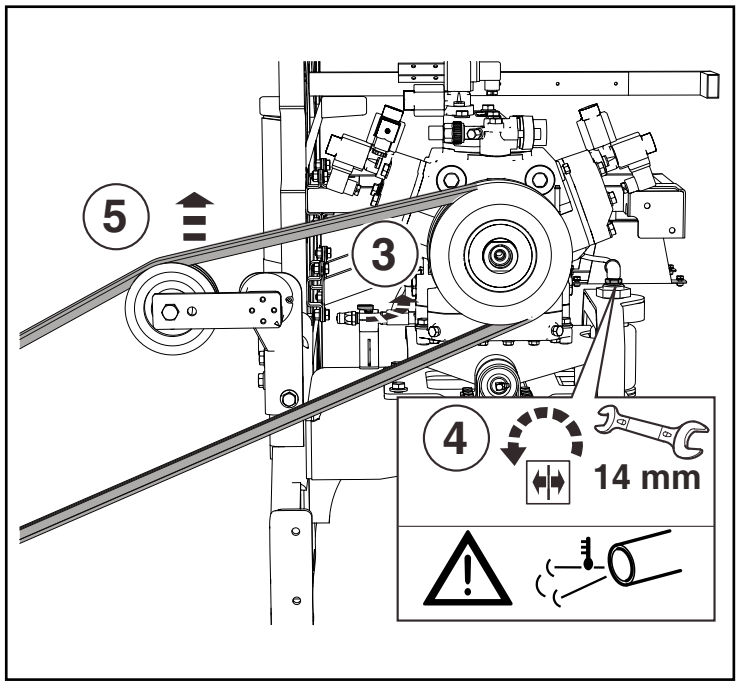

3. Turn off the pressured air line for the compressor belt tension piston.
4. Loosen the air hose and release air.
5. Remove V-belt.

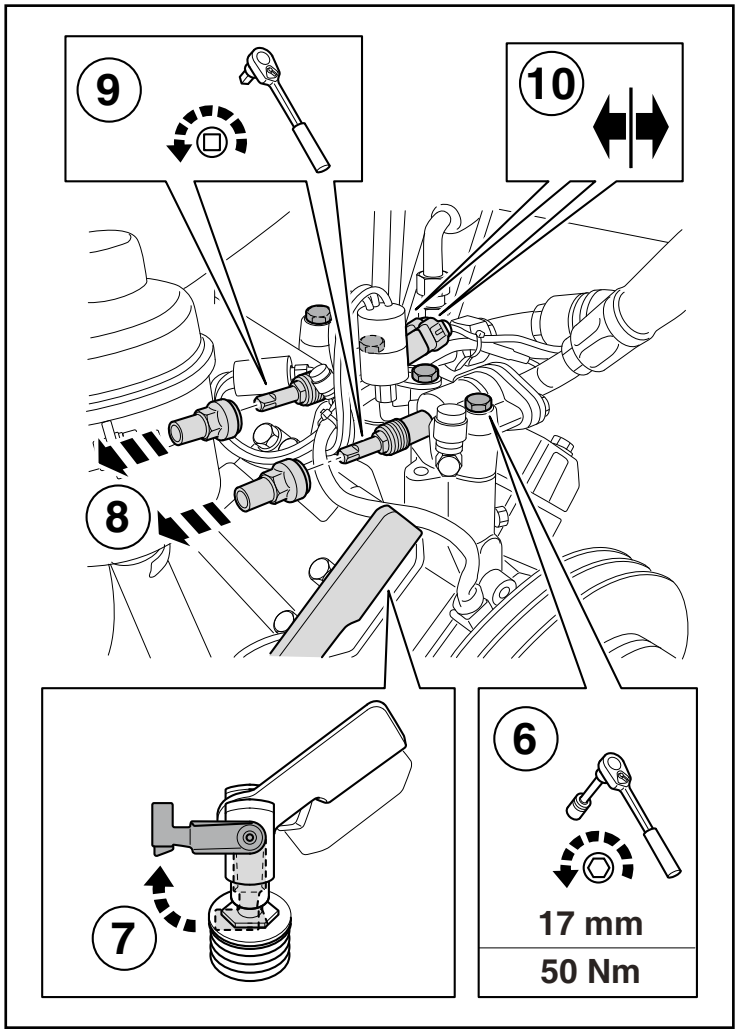

3.3. REMOVING THE A/C V-BELT AND COMPRESSOR

6. Remove 4 bolts (tool size: 17 mm).
7. Unlock the pin of the tension piston and pull the pin out.
8. Remove the caps from the valves.
9. Turn off the valves by turning clockwise.
10. Disconnet the electric sockets.

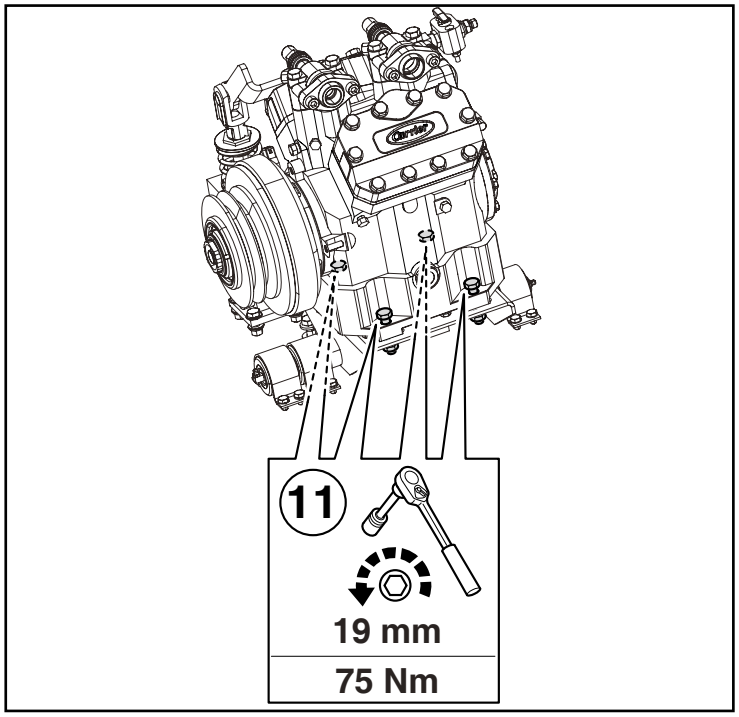

11. Remove 4 bolts (tool size: 19 mm).

WARNING

Hair, hands or clothing can be caught in the belt drive or coupling! Serious injuries are possible. The area of the coupling must be secured with a separating cover (belt or coupling protection)!

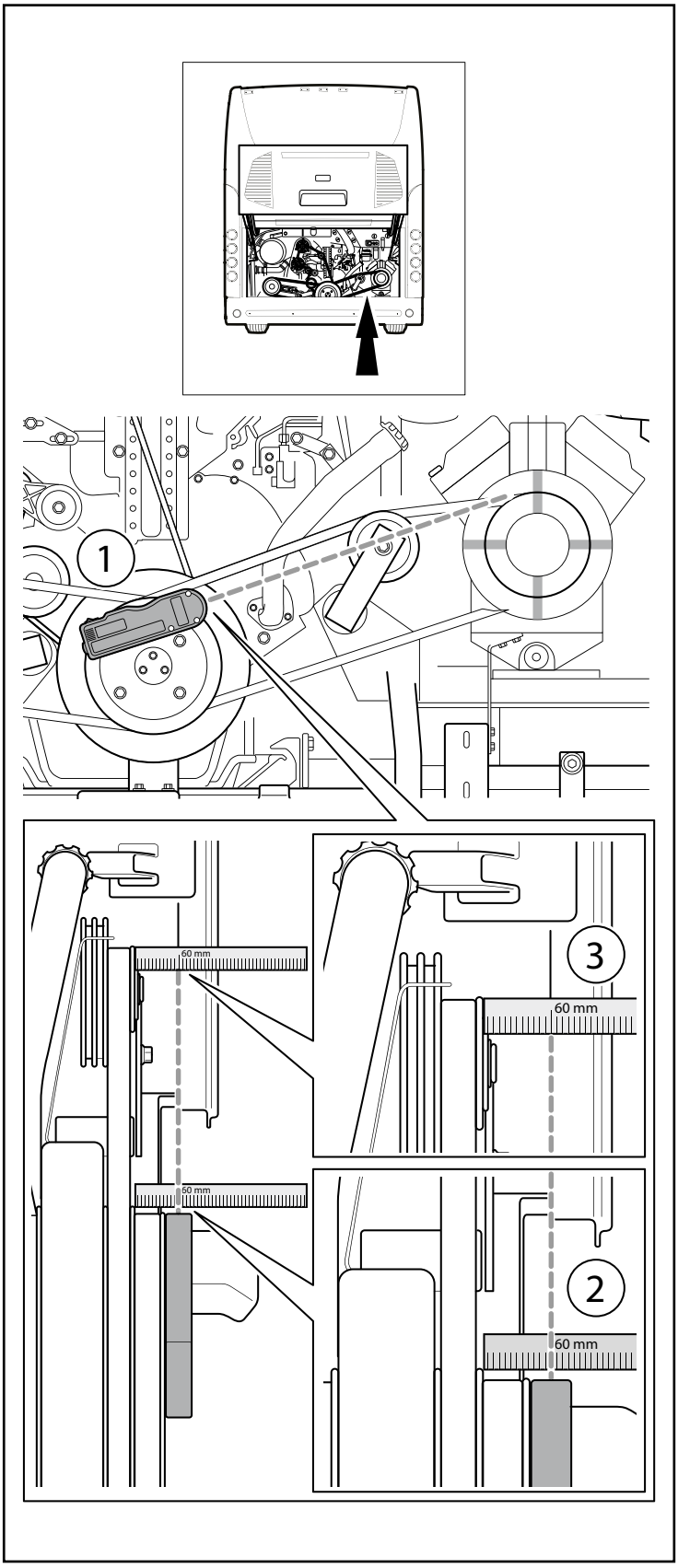

3.3.1 INSTALLATION AND REALIGNEMENT OF A/C V-BELT

1. After completed installation of A/C Compressor. Connect laser to center drive wheel.
2. Take measurement from center drive wheel.
3. Take measurement from 4 points on compressor drive wheel.
4. When the air is filled in the system, pull the compressor spring up to tension the V-belt.
5. At the end of above steps tighten the support nut.
6. Bolts can be used to adjust the tightness of the belt.

WARNING

Both measurements must be the same, when not adjust accordingly.

CAUTION

- A Loose V-belt will result in overheating of V belt and insufficient charge of A/C Compressor.
- Excessive tension of V Belt could cause damage to the bearings of A/C Compressor and damage to V-belts.
- If replacement of either of the V-belts is necessary, replace both of V-belts.

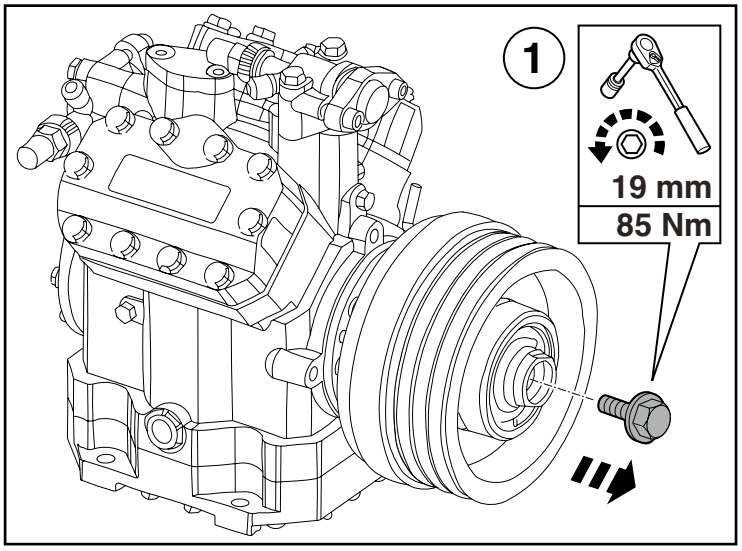

3.4. ELECTRO-MAGNETIC CLUTCH

3.4.1 REMOVING THE ELECTRO-MAGNETIC CLUTCH

1. Remove A/C V-belts, see 3.3.1 Removing the A/C V-Belt and Compressor. Screw out central straining screw until the collar touches the circlip and the clutch is released (integrated pulling device).

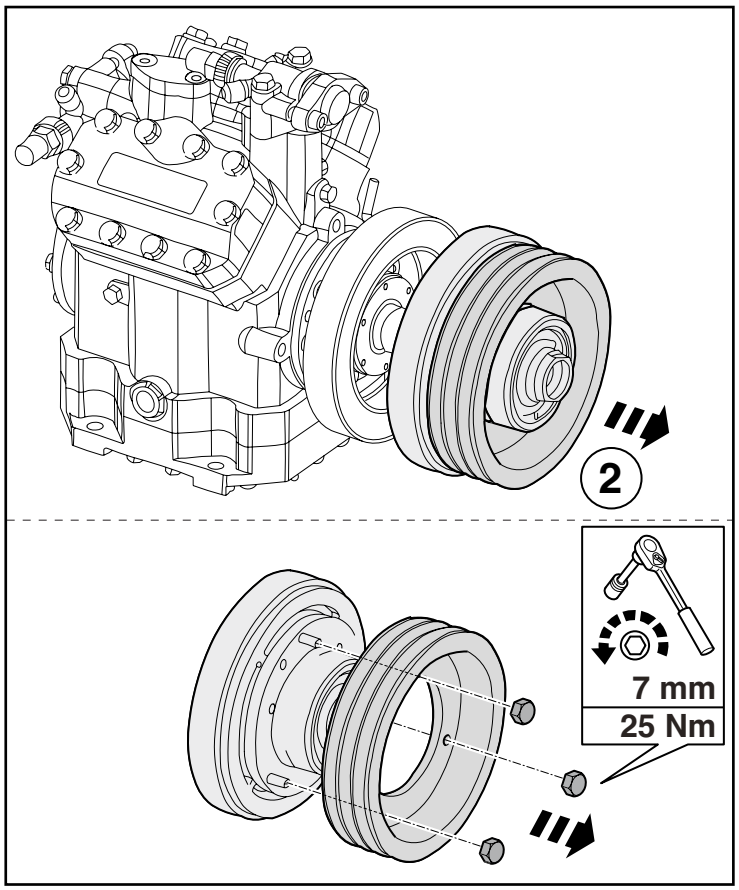

2. Turn straining screw further, until the coupling separates from the shaft. Remove coupling.

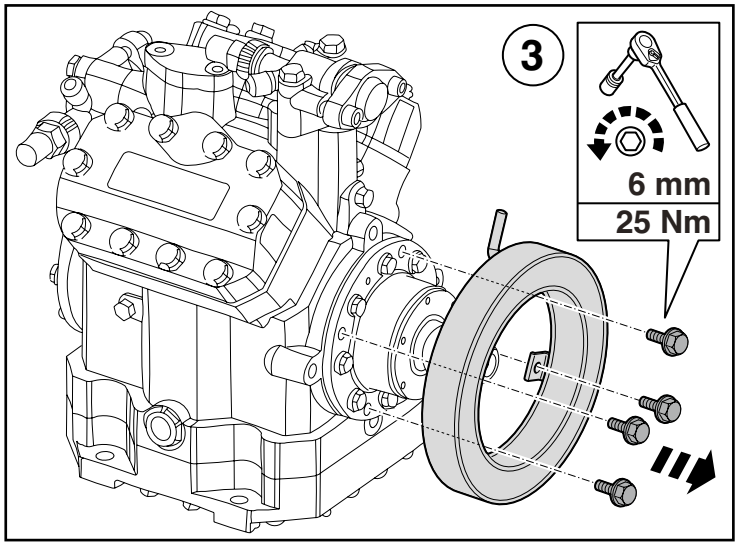

3. Screw off magnet (tool size: 6 mm).

CAUTION

Compressor damage possible! The shaft must never be forced towards the drive side by the use of levers to remove the clutch! By removing the electro-magnetic clutch follow exactly the instructions of the manufacturer.

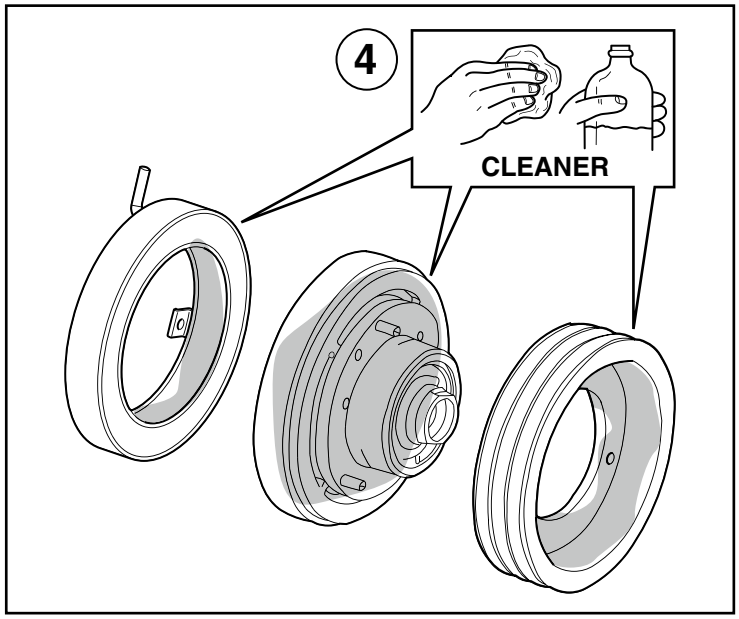

3.4.1 REMOVING THE ELECTRO-MAGNETIC CLUTCH

4. Clean and check magnet and coupling. Replace if necessary.

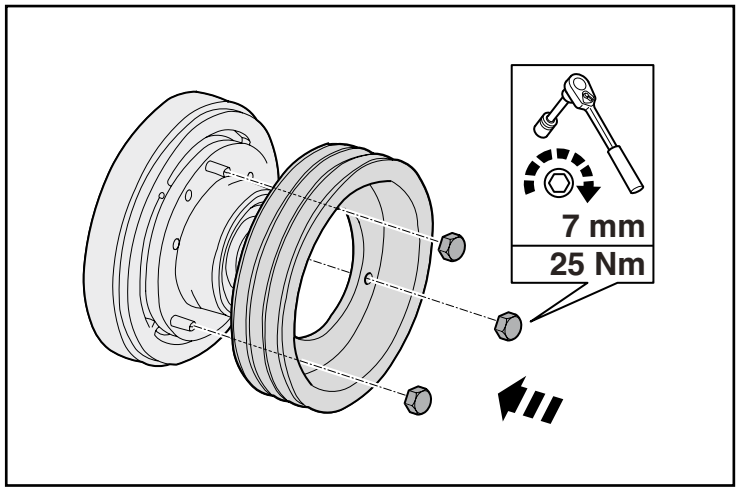

3.4.2 INSTALLATION OF THE ELECTRO-MAGNETIC CLUTCH

1. Slide pulley over the pin screws of the clutch and screw down with nuts.You must be able to turn the coupling by hand without it rubbing against the magnet!

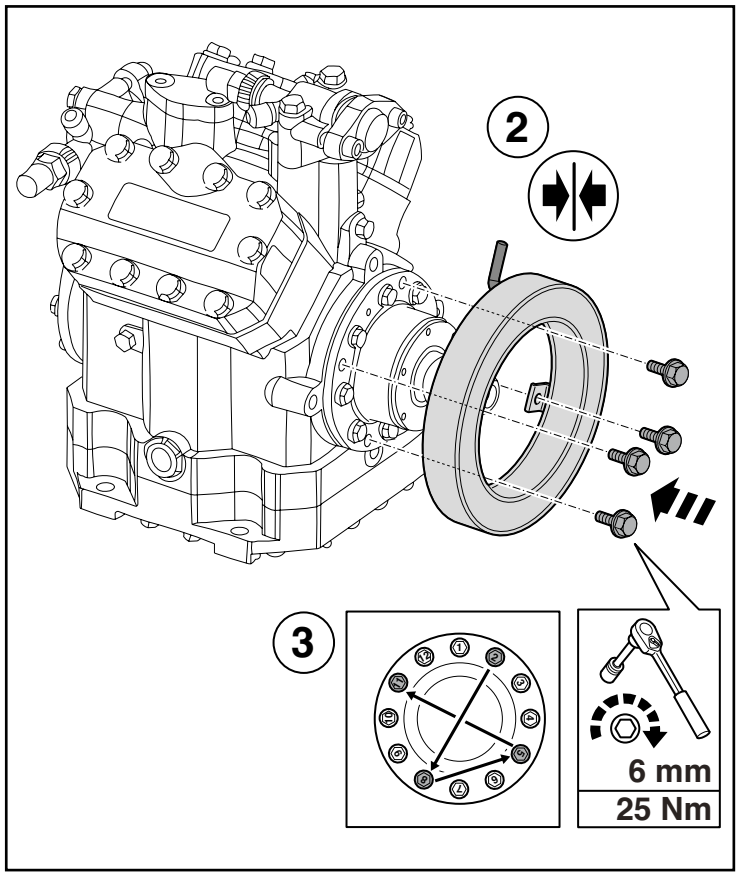

2. Connect cable (polarity is irrelevant here), and keep away from hot parts (t_{max} = 105 °C).
3. Fasten magnet to housing. Insert bolts and tighten crosswise.

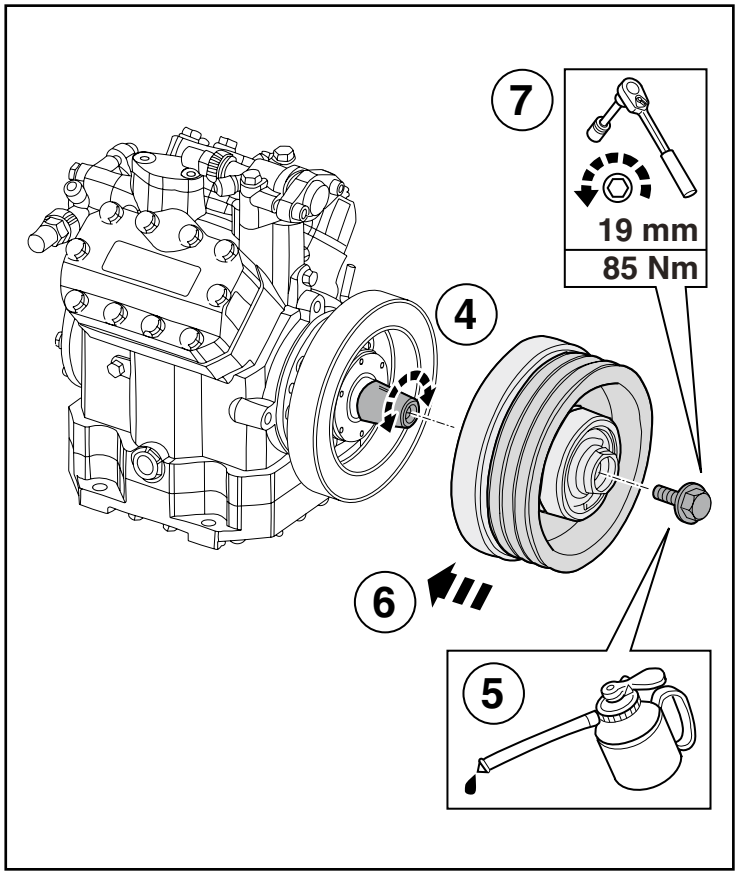

3.4.2 INSTALLATION OF THE ELECTRO-MAGNETIC CLUTCH

4. Mount woodruff key.
5. Lubricate straining screw.
6. Slide rotor onto shaft and magnet.
7. Screw straining screw into shaft end.

CAUTION

- Tighten bolts and nuts to the specified torques.

Removal Sequence:

7 - 8 10 > 6 - 5 - 4 > 1

Note:
Installation Sequence is reverse of removal sequence.

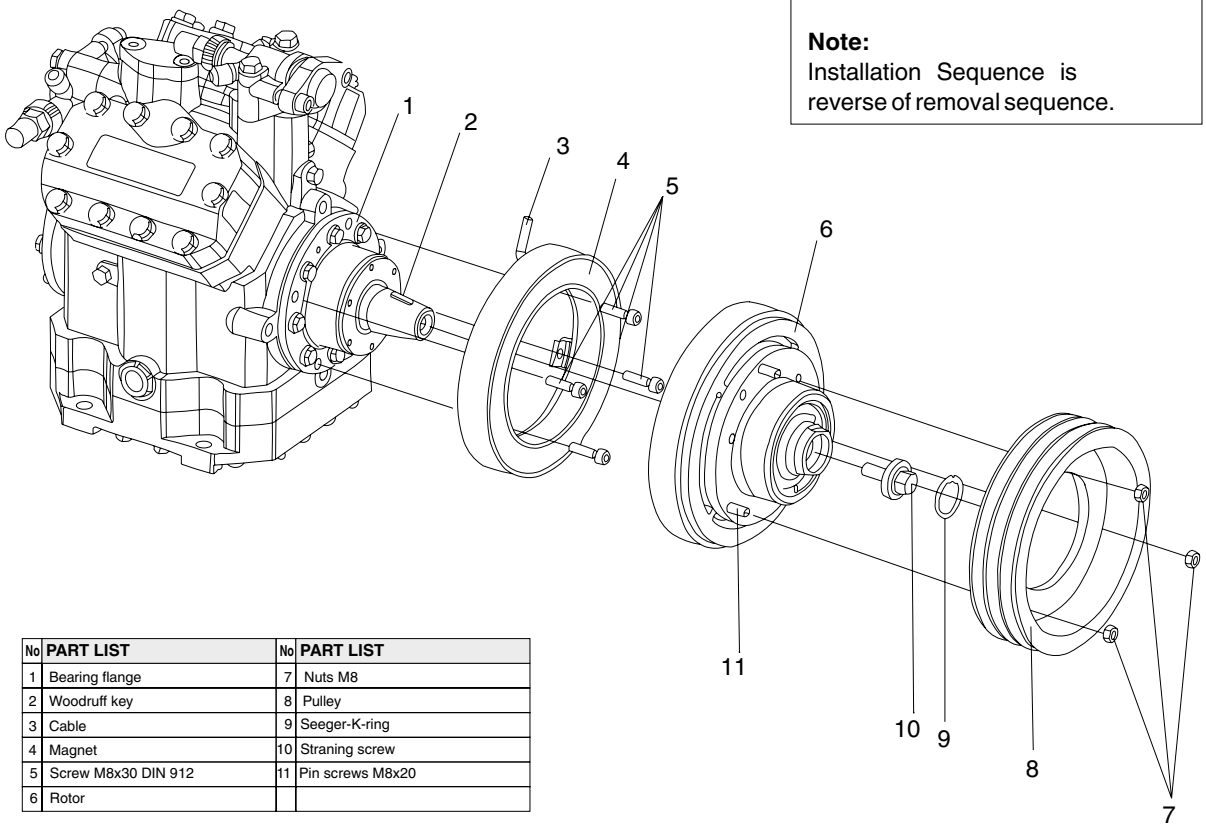

No	PART LIST	No	PART LIST
1	Bearing flange	7	Nuts M8
2	Woodruff key	8	Pulley
3	Cable	9	Seeger-K-ring
4	Magnet	10	Straning screw
5	Screw M8x30 DIN 912	11	Pin screws M8x20
6	Rotor		

4. TROUBLESHOOTING

OBSERVED FAILURE	Discharge pressure abnormally high	Discharge pressure lower than normal	Suction pressure above normal	Suction pressure abnormallly low	Unit operating at vacuum	Bubbles in sight glass	Frost on suction line	System pressure cannot be lowered during gas charge	Compressor cannot be vacuumed (having service valves)	Compressor vacuum not maintained	Compressor noisy while operating	Unit cannot supply sufficient cooling	Suction line temperature higher than environmental temperature	Compressor noisy when not operating	Compressor body too hot	Compressor body too cold	POSSIBLE CAUSES
	X		X			X		X			X	X	X		X		Excessive refrigerant amount in the system
		X		X	X	X						X	X		X		Insufficient refrigerant amount in the system
		X		X	X							X					No refrigerant in the system
	X		X			X						X			X		Air passing through the condenser is very hot (environmental temperature).
	X		X			X						X	X		X		Air passing through the condenser is insufficient
	X		X			X						X	X		X		Condenser combs too dirty
		X		X													Air passing through the condenser is very cold (environmental temperature)
	X		X			X						X					Air inside the refrigerant.
	X		X			X						X			X		Condenser fans broken or fan not operating at full cycle
				X	X		X					X				X	Air passing through the evaporator is insufficient
				X	X		X					X				X	Evaporator fans broken or fan not operating at full cycle
				X	X		X					X				X	Evaporator comb intervals clogged, covered with ice
		X	X				:<		X	X		X	X				Compressor valve plate discharge side leakage
			X					X	X	X		X			X		Compressor valve plate suction side leakage
		X	X					X	X	X	X	X	X				Compressor valve plate suction or discharge lamellas broken
											X	X					Abnormally excessive amount of oil in the compressor
							X					X				X	Liquid fluid entry to compressor
														X			Compressor rim bearing broken
														X	X		Compressor rim-clutch interval too short
														X			Compressor clutch steel springs loose or broken
	X	X	X	X	X	X	X				X	X			X	X	Expansion valve not operating properly
	X		X				X				X	X				X	Expansion valve tail bulb suction side disconnected to suction line
		X		X								X					Expansion valve super heat adjustment very high (tampered)
			X				X				X	X				X	Expansion valve super heat adjustment very low (tampered)
					X							X					Expansion valve frozen from inside or filter is clogged
					X							X					Expansion valve tail bulb is detached or lost gas refilling
						X						X					Expansion valve tail bulb connected at wrong position to the suction line
	X			X		X					X	X					Clogging at high-pressure side
			X	X	X							X					Clogging at low-pressure side
			X	X	X							X					Gas filter (Drier) partially or completely clogged
			x	x	x							x					Liquid tank (receiver) service valve closed
		x	x			x						x					Low, insufficient compressor cycle

4.1. SUCTION PRESSURE TOO LOW, DISCHARGE PRESSURE TOO LOW TO NORMAL

Suction pressure
too low



Discharge pressure
too low to normal



Cause	Possible effect	Remedy
Shortage of refrigerant	no subcooling, bubbles in sight glass, extreme superheat, evaporator frosting	leak detection, top up
Suction shut-off valve on compressor throttled or closed	suction pressure gauge indicates a vacuum	check valve position and adjust
Evaporator fins or air filter contaminated	insufficient cooling capacity	clean
Evaporator fan failure	low pressure cut-out	repair fan
Brine frozen (in indirect systems)	evaporator damage	check freeze protection, increase brine concentration
Defective expansion valve (leak in sensor system)	suction pressure gauge indicates a vacuum because valve is closed	replace valve
Clogged strainer or nozzle of expansion valve	extreme superheat	clean
Clogged filter-drier	bubbles in sight glass, extreme superheat, filter-drier cold	replace filter-drier
Shut-off valve on receiver throttles, pressure drop in liquid line	bubbles in sight glass, extreme superheat, cold line section	open valve, check line
Too little heat load	frequent low pressure cut-out, freeze protection thermostat cycles frequently	check capacity control

4.2. SUCTION PRESSURE NORMAL, DISCHARGE PRESSURE TOO HIGH

Suction pressure
normal



Discharge pressure
too high

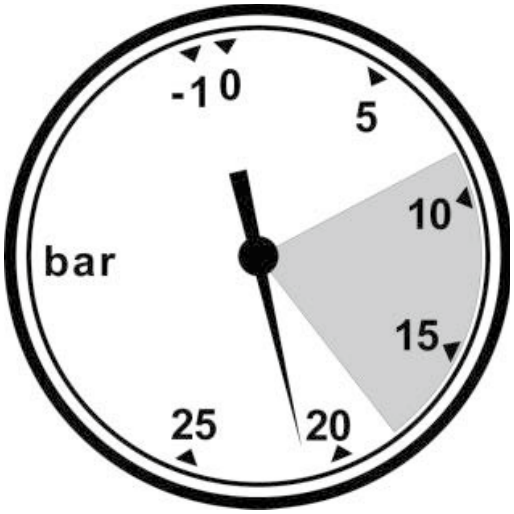

Cause	Possible effect	Remedy
Condenser contaminated	high hot gas temperature, low cooling capacity	clean
Condenser fan failure	high hot gas temperature, high pressure cut-out	repair
Overcharge	high hot gas temperature, high subcooling, low cooling capacity	optimize refrigerant charge
Non-condensables (air)	high hot gas temperature, high measured subcooling, low cooling capacity	recharge
Throttling between compressor and condenser	high hot gas temperature, low cooling capacity	check lines and valves

4.3. SUCTION PRESSURE TOO HIGH, DISCHARGE PRESSURE TOO LOW TO NORMAL

Suction pressure
too high



Discharge pressure
too low to normal



Cause	Possible effect	Remedy
Defective compressor (valve plate, piston rings)	insufficient cooling capacity	replace compressor or defective parts
Defective capacity control	insufficient cooling capacity extremely high hot gas temperature with bypass open	repair capacity control

4.4. SUCTION PRESSURE TOO HIGH, DISCHARGE PRESSURE TOO HIGH

Suction pressure
too high



Discharge pressure
too high

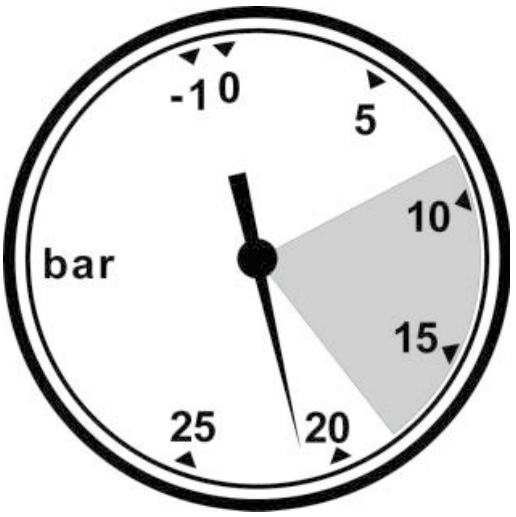

Cause	Possible effect	Remedy
Sensor of thermostatic expansion valve loose, has poor contact or is not heat insulated	too little superheat, compressor draws in liquid	adjust sensor attachment

4.5. OTHER MALFUNCTIONS

Symptom	Cause	Possible effect	Remedy
Hot gas temperature too high	oil shortage	undue compressor wear	top up oil
Compressor not running	pressure switch or other safety cut-out has tripped, electrical fault, cylinder filled with liquid refrigerant	compressor stopped	check switching gear locate and eliminate cause of tripping
Compressor cycles continuously	switching difference too little, tripping of a cut-out device (overpressure switch, low pressure switch) shortage of refrigerant, defective fan, overcharge	compressor cycling, increased wear, insufficient cooling capacity	check switching devices, eliminate cause of cycling on/off
Extreme superheat	valve maladjusted, valve nozzle too small, valve sieve clogged, shortage of refrigerant, MOP reached (no fault)	low cooling capacity high hot gas temperatures	adjust valve, replace nozzle, install filter, clean, top up, leak detection
Insufficient superheat	valve maladjusted, valve nozzle too large, overcharge (capillaries), incorrect sensor attachment	compressor draws in liq-uid, compressor damage	adjust valve, replace nozzle, optimize refrigerant charge, correct sensor attachment

18 HEATING

Rev.00 / 25.03.14

1. TOOLS 2

2. STRUCTURE AND OPERATIONS 3

2.1. General 3

2.2. Heating System Operating Constructions 4

2.3. Heating System Components 5

2.4. Defroster Gas Line 6

3. SERVICE PROCEDURE 7

3.1. Defroster Unit 7

3.2. Heating System Connections 8

3.3. Preheater 9

GENERAL

- If work is performed by people who do not have the necessary training to carry out the work or if this information is handled carelessly or totally ignored, this may result in severe injury and/or death. Inaddition, serious damage to the vehicle may occur.
- Always read the safety instructions in full before starting certain operations. The safety instructions stipulate which aspects must be considered to achieve maximum safety. The information is given that is very important for health and safety.
- Always work in adequately ventilated rooms with sufficient lighting, free from dirt and clutter. Never leave tools or parts lying around, keep away from (high-) voltage sources that present a risk of short-circuiting. Always wear protective clothing. Do not wear any damaged or loose-fitting clothing and remove jewelry before starting the work. In case of long hair use hairnet.

1. TOOLS

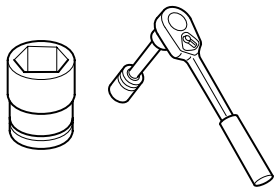 Impact Socket	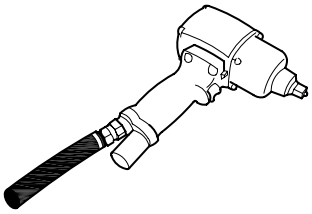 Impact Wrenches	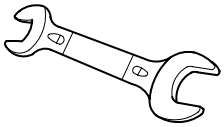 Open Wrench Double Ended
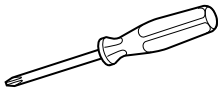 Screw Driver	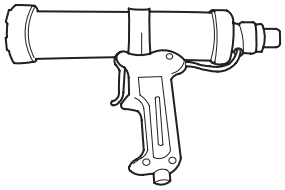 Sealer Machine	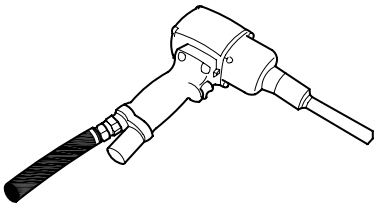 Drill
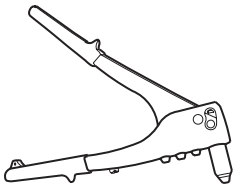 Rivet Machine	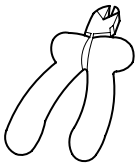 Stripping Plier	

2. STRUCTURE AND OPERATIONS

2.1. GENERAL

The heating system of the bus consist of a heater control unit, water pumps that controlled water valve, front defroster unit and ducts. The heating system uses hot water from the engine coolant.

There are 2 lines for the circulation of hot water:

- Roof (for A/C unit)
- Room (for defroster unit)

An electrical controlled valve installed at the beginning of roof piping lines and manual controlled valve installed at the beginning of the defroster piping lines.

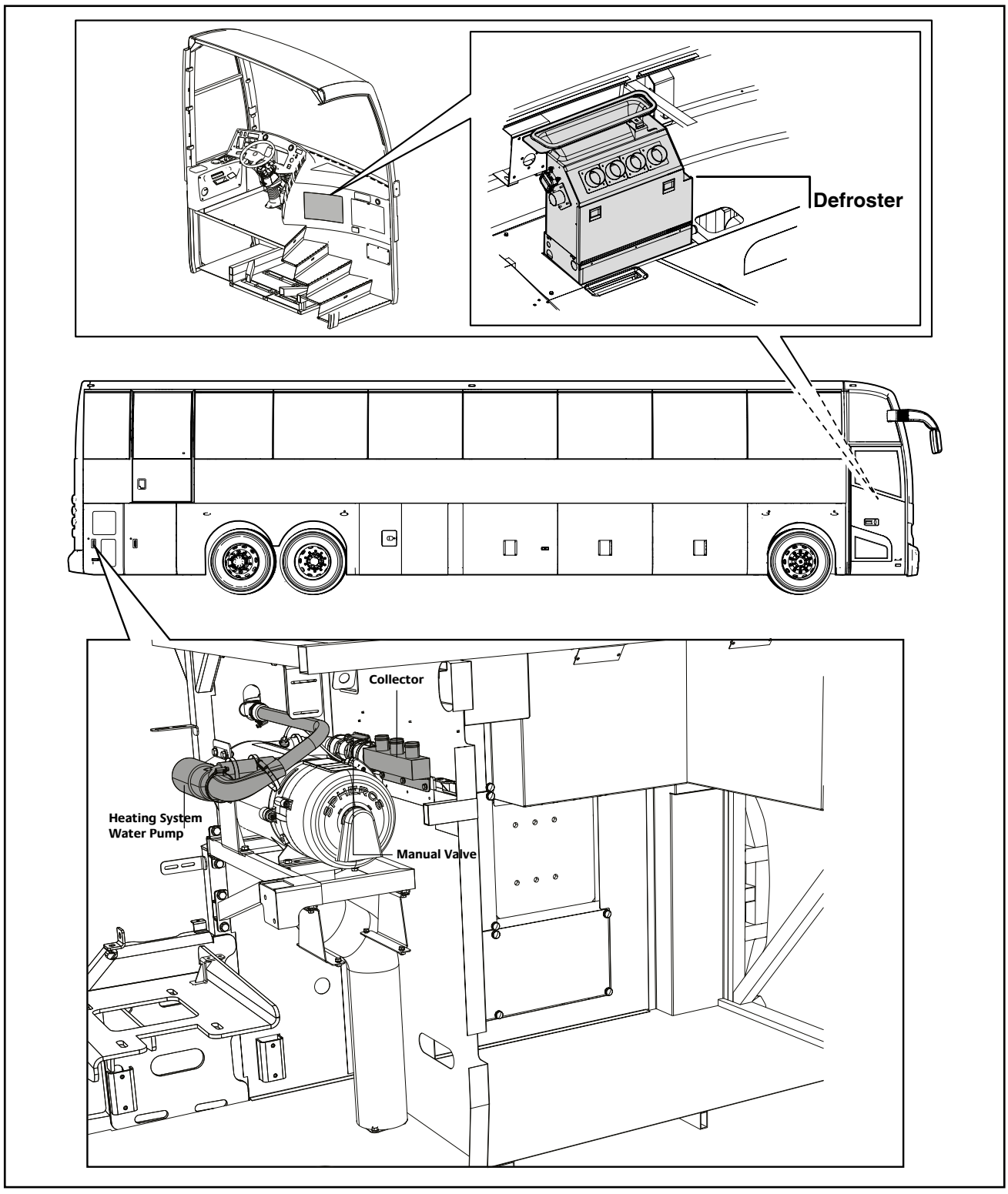



WARNING

- Risk of injuries and burns! It is Possible for the coolant and components of the coolant circuit to get very hot.
- Parts conveying water must be routed and fixed in such a way that they pose no threat due to temperature for man or material.
- Before working on the coolant circuit, switch the heater off and wait until all components have cooled down completely, wear safety gloves.

2.2. HEATING SYSTEM OPERATING CONSTRUCTIONS

- If the engine coolant temperature is lower than 140 °F valves and water pumps do not operate.
- If the engine coolant temperature is higher than 140 °F valves and water pumps can only be operated by driver controls.
- Water pumps operate if one of the valves is in open position.
- Operationing control of roof and defroster valves is made by A/C unit. A/C unit control valves and water pump by sending information through MUXES.
- If the room temperature reaches adjusted temperature roof heating valve will be 'OFF'.

Note:
If heating system does not operate firstly check power supply of A/C unit or check A/C unit power supply fuse.

2.3. HEATING SYSTEM COMPONENTS

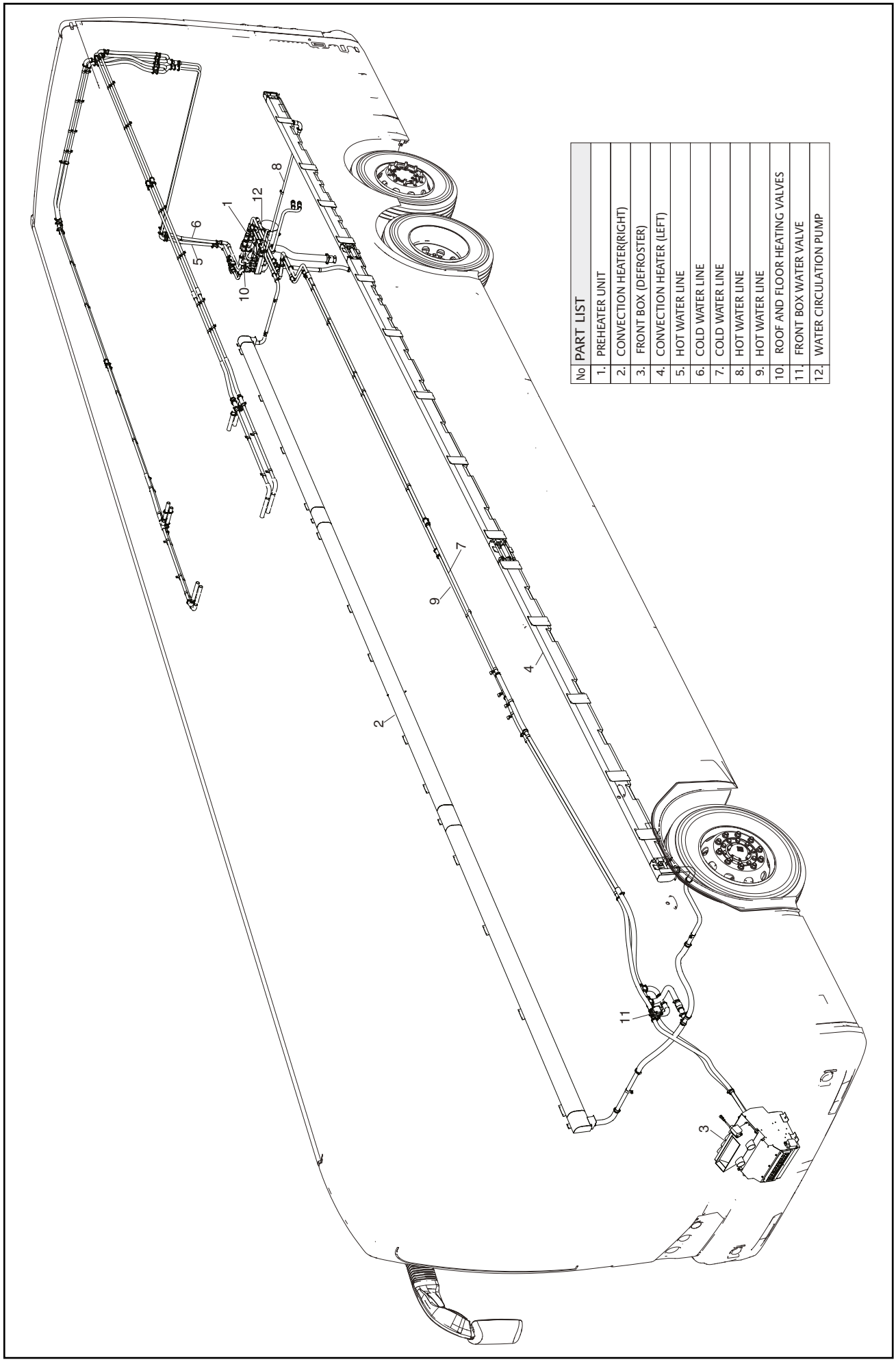

2.4. DEFROSTER GAS LINE

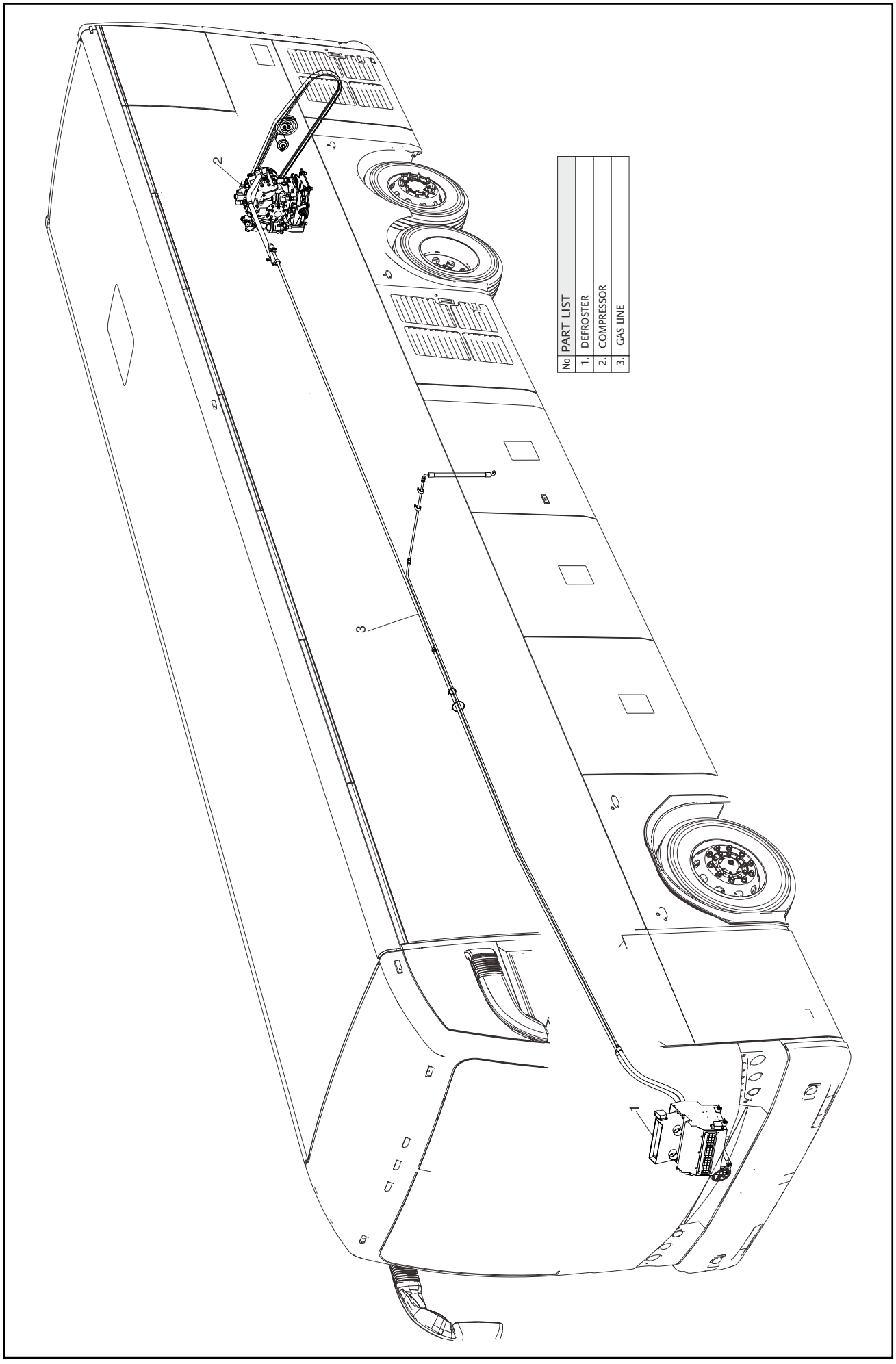

3. SERVICE PROCEDURE

3.1. DEFROSTER UNIT

3 step unit having manual control switch with led/lamp.

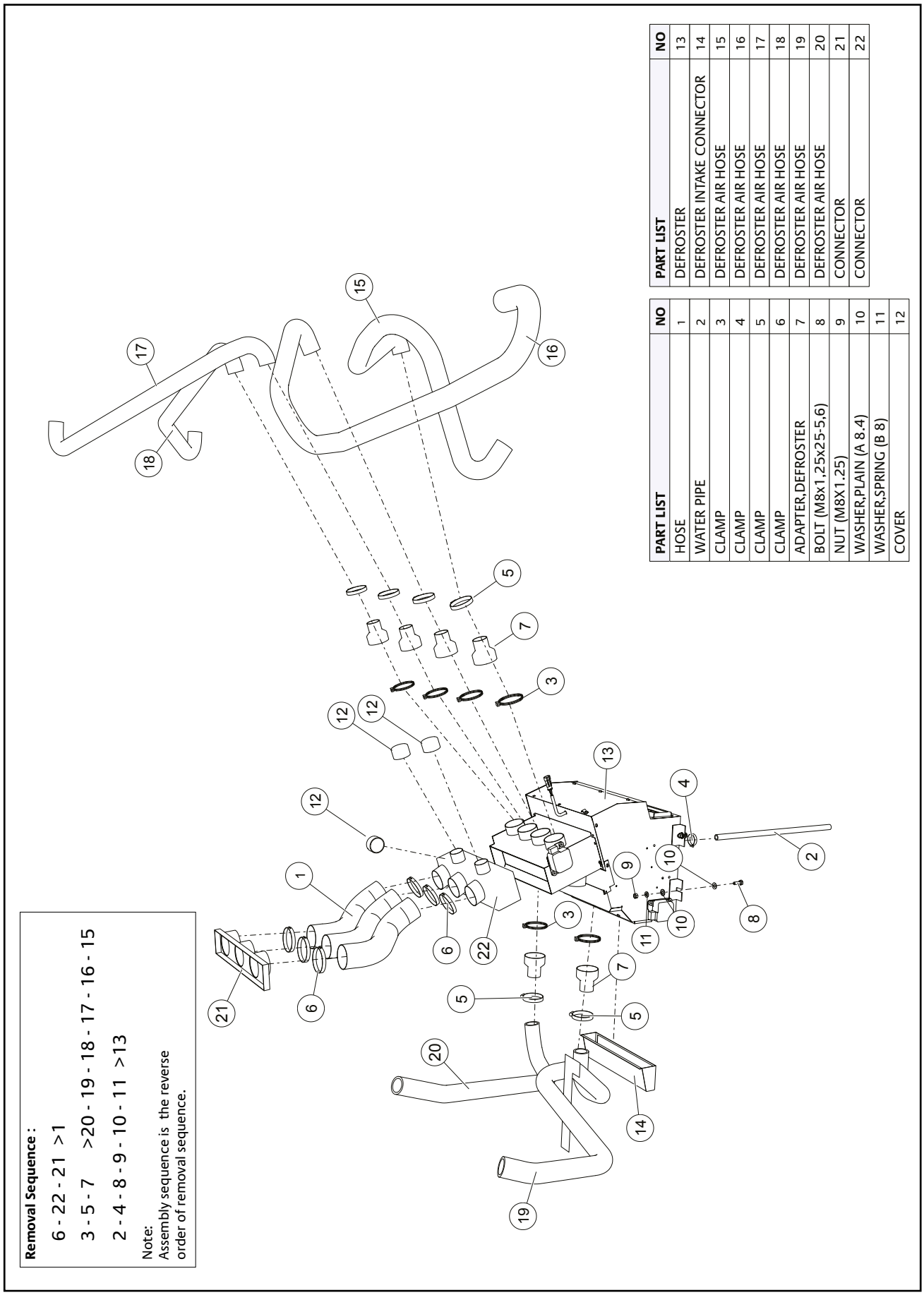

PART LIST	NO
HOSE	1
WATER PIPE	2
CLAMP	3
CLAMP	4
CLAMP	5
CLAMP	6
ADAPTER,DEFROSTER	7
BOLT (M8x1,25x25-5,6)	8
NUT (M8X1.25)	9
WASHER,PLAIN (A 8.4)	10
WASHER,SPRING (B 8)	11
COVER	12

PART LIST	NO
DEFROSTER	13
DEFROSTER INTAKE CONNECTOR	14
DEFROSTER AIR HOSE	15
DEFROSTER AIR HOSE	16
DEFROSTER AIR HOSE	17
DEFROSTER AIR HOSE	18
DEFROSTER AIR HOSE	19
DEFROSTER AIR HOSE	20
CONNECTOR	21
CONNECTOR	22

3.2. HEATING SYSTEM CONNECTIONS

Removal Sequence:

21 - 23 - 24 - 16 - 1 - 15 > 8
16 - 19 - 22 - 18 - 25 > 9 > 7
18 - 20 - 26 - 23 - 21 > 29 - 14

Note:
Assembly sequence is the reverse order of removal sequence.

PART LIST	NO
HOSE	1
HOSE, WATER	2
HOSE	3
HOSE	4
HOSE	5
ADAPTER	6
PREHEATER THERMO E 320	7
WATER PUMP (111144405A)	8
WATER DISTRIBUTOR	9
BRACKET,EXHAUST PIPE	10
PUMP BRACKET	11
HOT WATER PIPE	12
ADAPTER, HOT PIPE	13
EXHAUST PIPE ISOLATION	14
SPRING CLAMP	15
CLAMP	16

PART LIST	NO
PIPE	17
BOLT	18
BOLT	19
BOLT (M8x1.25x20)	20
BOLT	21
NUT (M6x1x5-4,8)	22
NUT (M8x1,25-5,6)	23
WASHER,PLAIN (A 8.4)	24
WASHER,SPRING (6)	25
WASHER,SPRING (B 8)	26
CLIP	27
SPHERICAL VALVE	28
PREHEATER EXHAUST PIPE	29
HOSE	30
BRACKET	31

3.3. PREHEATER

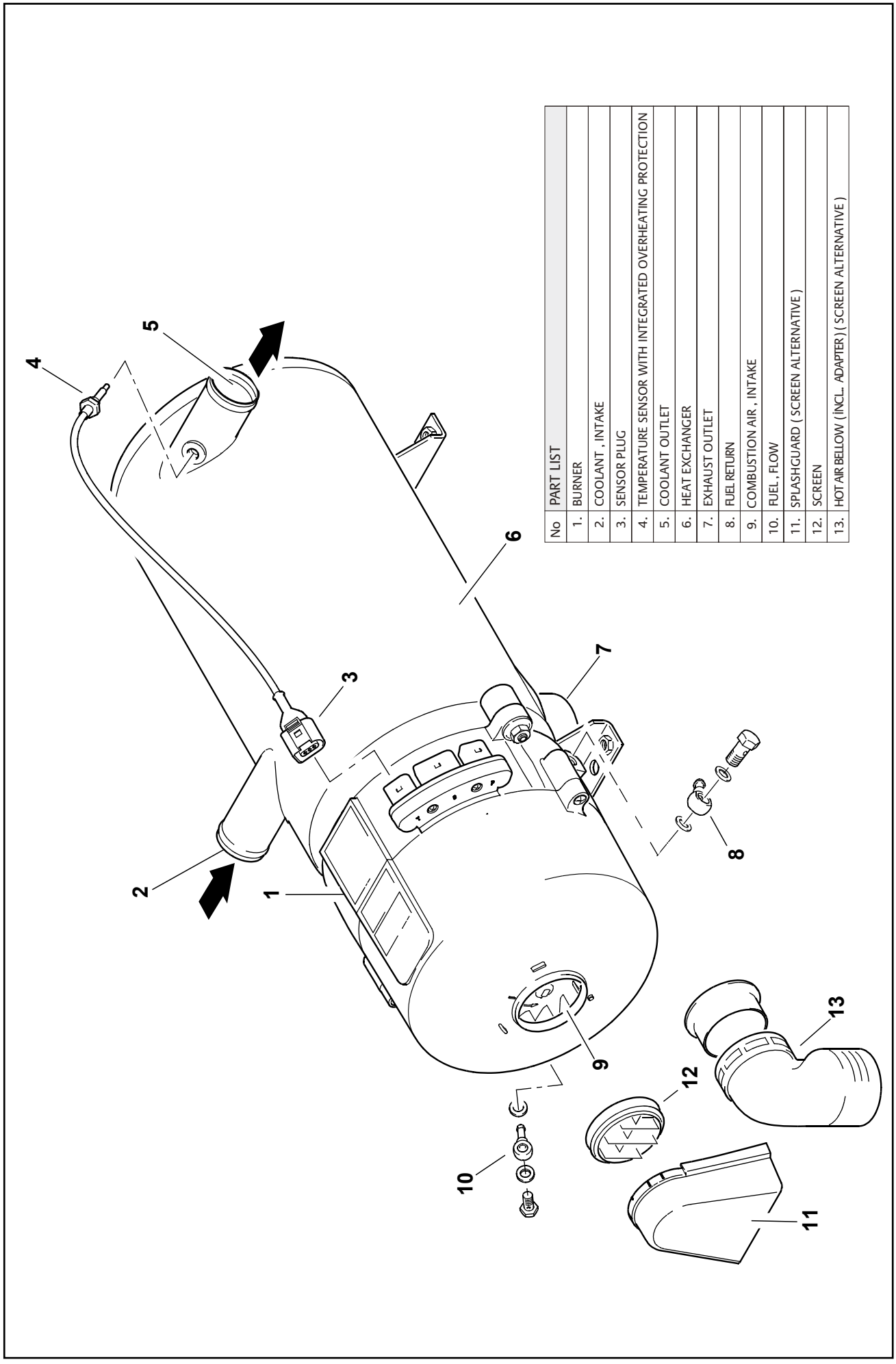

No	PART LIST
1.	BURNER
2.	COOLANT , INTAKE
3.	SENSOR PLUG
4.	TEMPERATURE SENSOR WITH INTEGRATED OVERHEATING PROTECTION
5.	COOLANT OUTLET
6.	HEAT EXCHANGER
7.	EXHAUST OUTLET
8.	FUEL RETURN
9.	COMBUSTION AIR , INTAKE
10.	FUEL , FLOW
11.	SPLASHGUARD (SCREEN ALTERNATIVE)
12.	SCREEN
13.	HOT AIR BELLOW (INCL. ADAPTER) (SCREEN ALTERNATIVE)

19 SEAT INSTALLATION

Rev.00 / 25.03.14

1. TOOLS **1**

2. SERVICE PROCEDURE **2**

2.1. Before Starting Work On Seats 2

2.2. Removing Driver Seat 3

2.3. Removing Assistance Seat(If Applicable) 3

2.4. Removing Passenger Seat 4

2.5. Removing Rear Seat 5

GENERAL

- If work is performed by people who do not have the necessary training to carry out the work or if this information is handled carelessly or totally ignored, this may result in severe injury and/or death. Inaddition, serious damage to the vehicle may occur.
- Always read the safety instructions in full before starting certain operations. The safety instructions stipulate which aspects must be considered to achieve maximum safety. The information is given that is very important for health and safety.
- Always work in adequately ventilated rooms with sufficient lighting, free from dirt and clutter. Never leave tools or parts lying around, keep away from (high-) voltage sources that present a risk of short-circuiting. Always wear protective clothing. Do not wear any damaged or loose-fitting clothing and remove jewelry before starting the work. In case of long hair use hairnet.

1. TOOLS

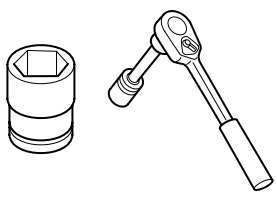	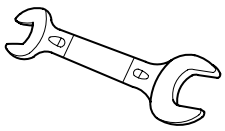	
Impact Socket	Open Wrench Double Ended	

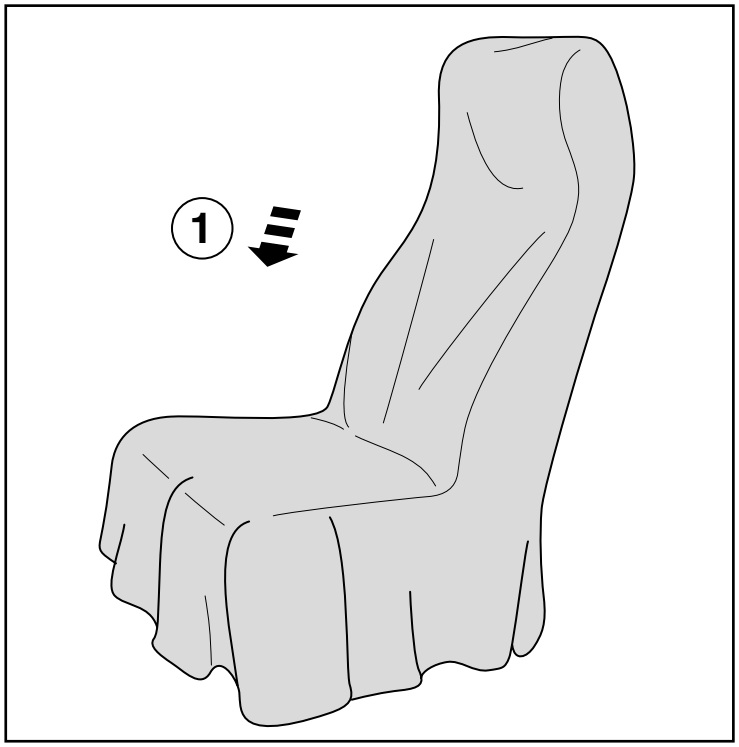

2. SERVICE PROCEDURE

2.1. BEFORE STARTING WORK ON SEATS

1. Before starting work on seats protect with seat covers.

2.2. REMOVING DRIVER SEAT

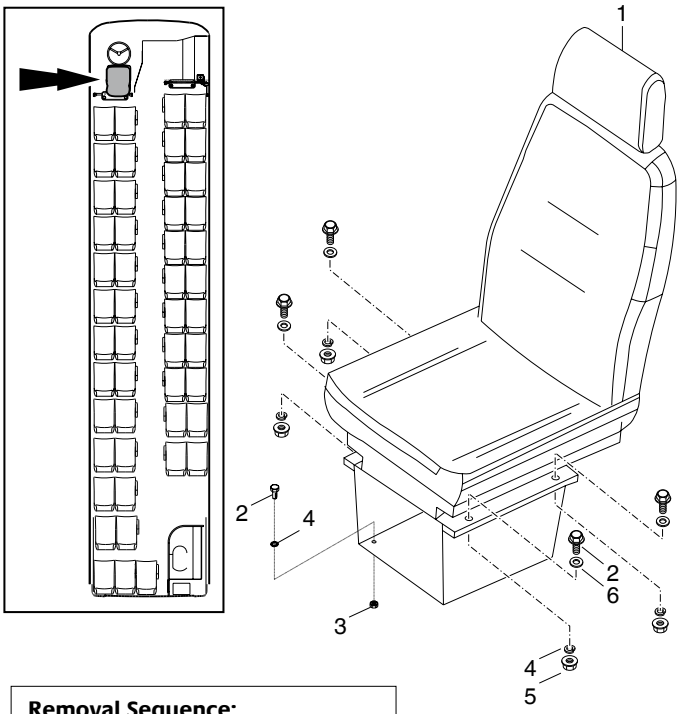

Removal Sequence:

2 - 3 - 4 - 5 - 6 > 1

Note:
Assembly Sequence is the reverse order of Removal Sequence.

No	PART LIST
1.	DRIVER SEAT
2.	BOLT
3.	NUT
4.	WASHER SPRING
5.	SELF-LOCKING NUT
6.	WASHER

2.3. REMOVING ASSISTANCE SEAT (IF APPLICABLE)

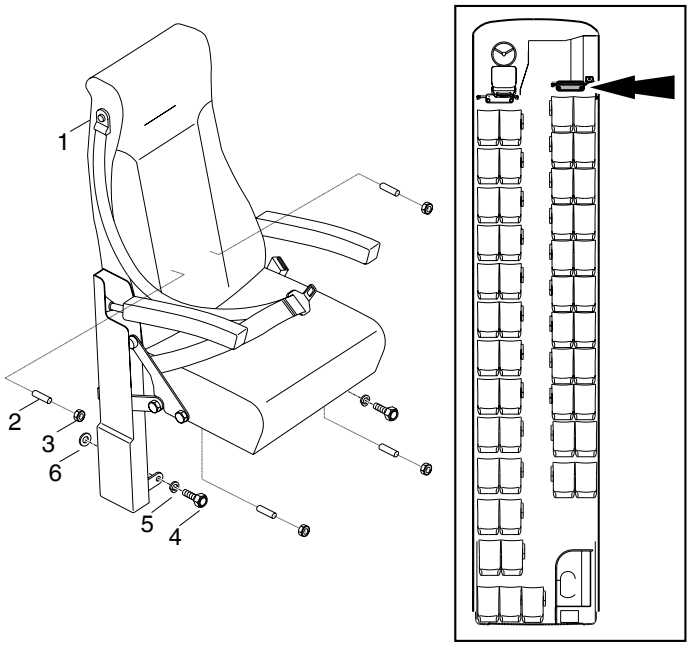

Removal Sequence:

2 - 3 - 4 - 5 - 6 > 1

Note:
Assembly Sequence is the reverse order of Removal Sequence.

No	PART LIST
1	ASSISTANCE SEAT
2	BUSHING
3	NUT
4	BOLT
5	WASHER SPRING
6	WASHER

2.4. REMOVING PASSENGER SEAT

1. Unscrew the aisle side bolts of seat.
2. Unscrew the window side bolts of seat. Remove the seat completely.

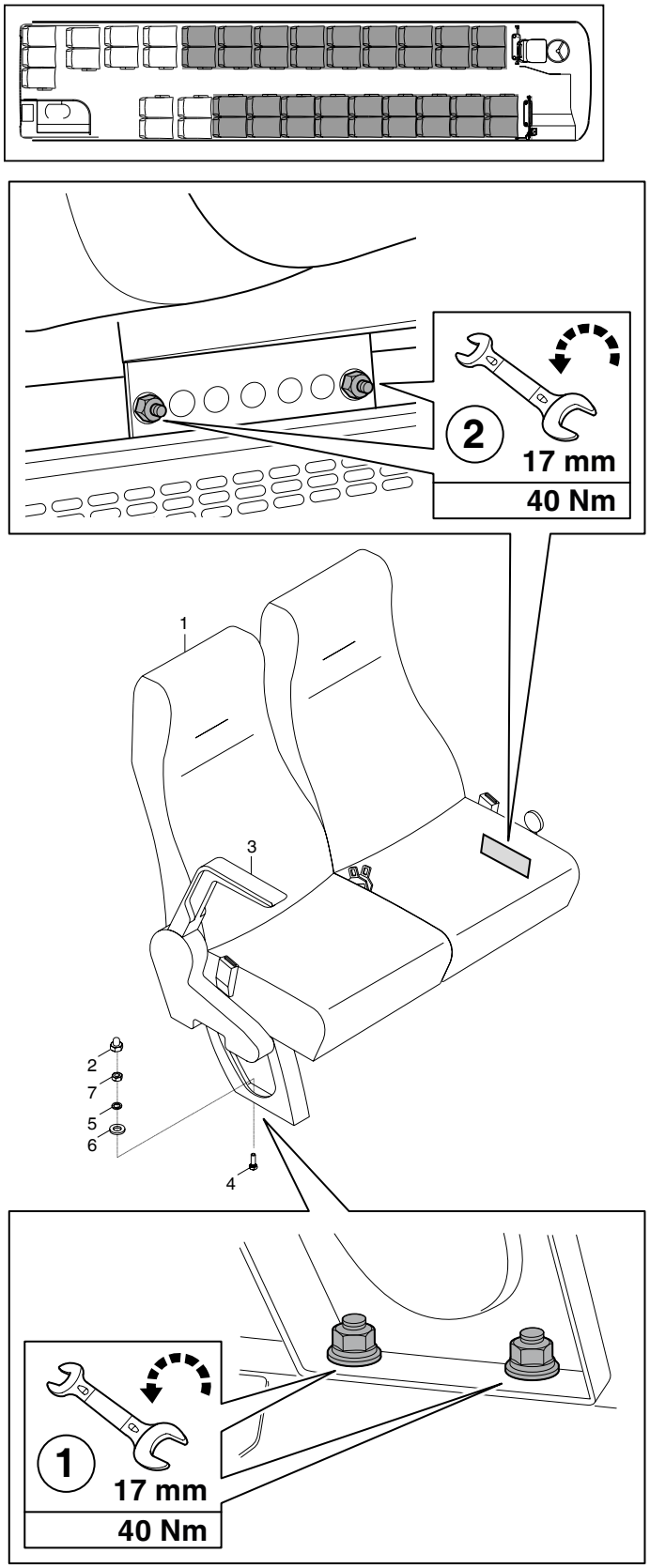

Removal Sequence:

2 - 7 - 4 > 1

Note:
Assembly Sequence is the reverse order of Removal Sequence.

No	PART LIST
1.	SEAT
2.	NUT COVER
3.	ARMREST
4.	BOLT
5.	WASHER PLAIN
6.	WASHER PLAIN
7.	NUT

2.5. REMOVING REAR SEAT

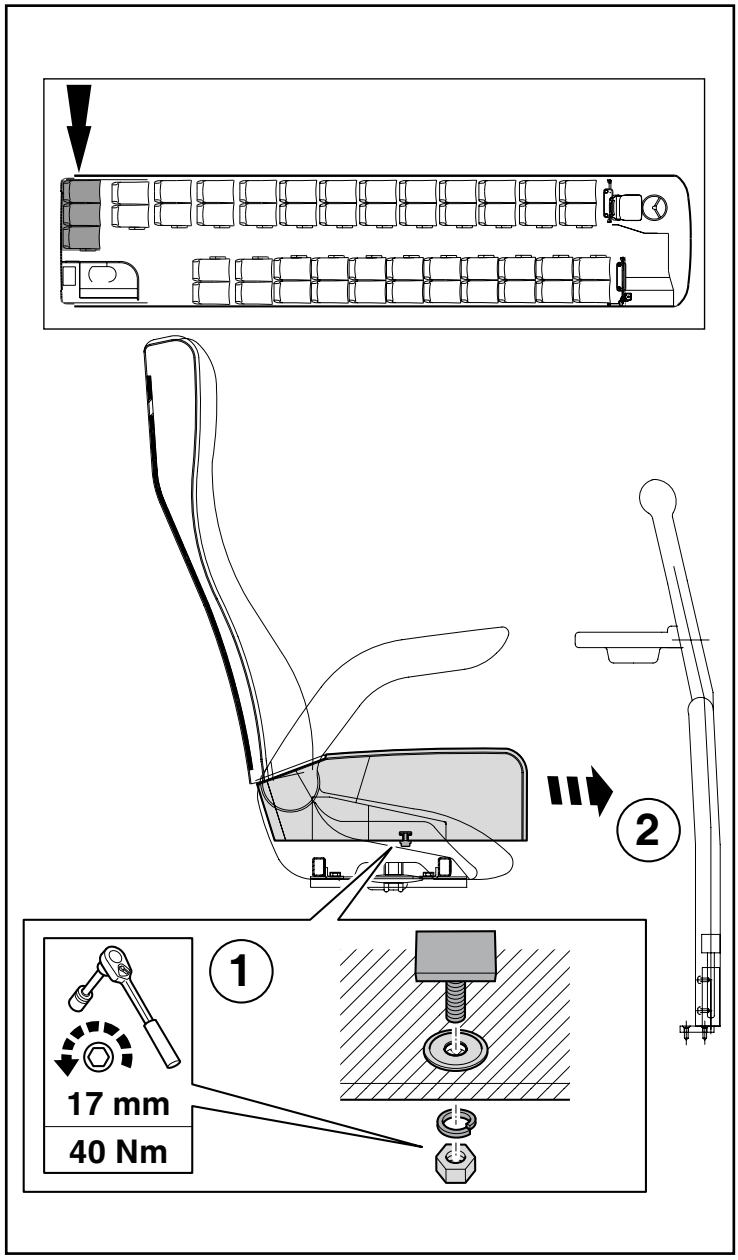

1. Unscrew the bolts of rear seat
2. Remove seat cushion.

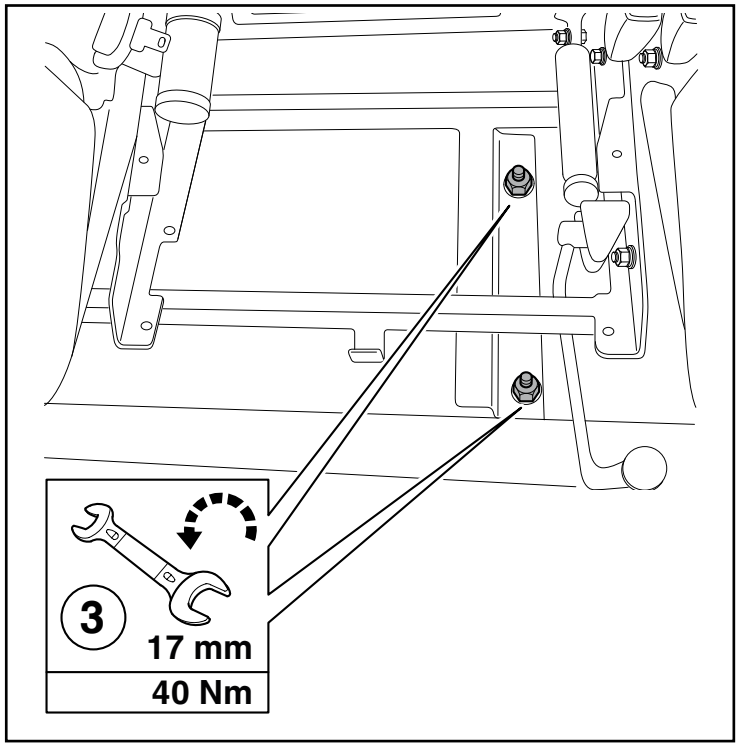

3. Unscrew the bolts of rear seat. Remove the rear seat completely.

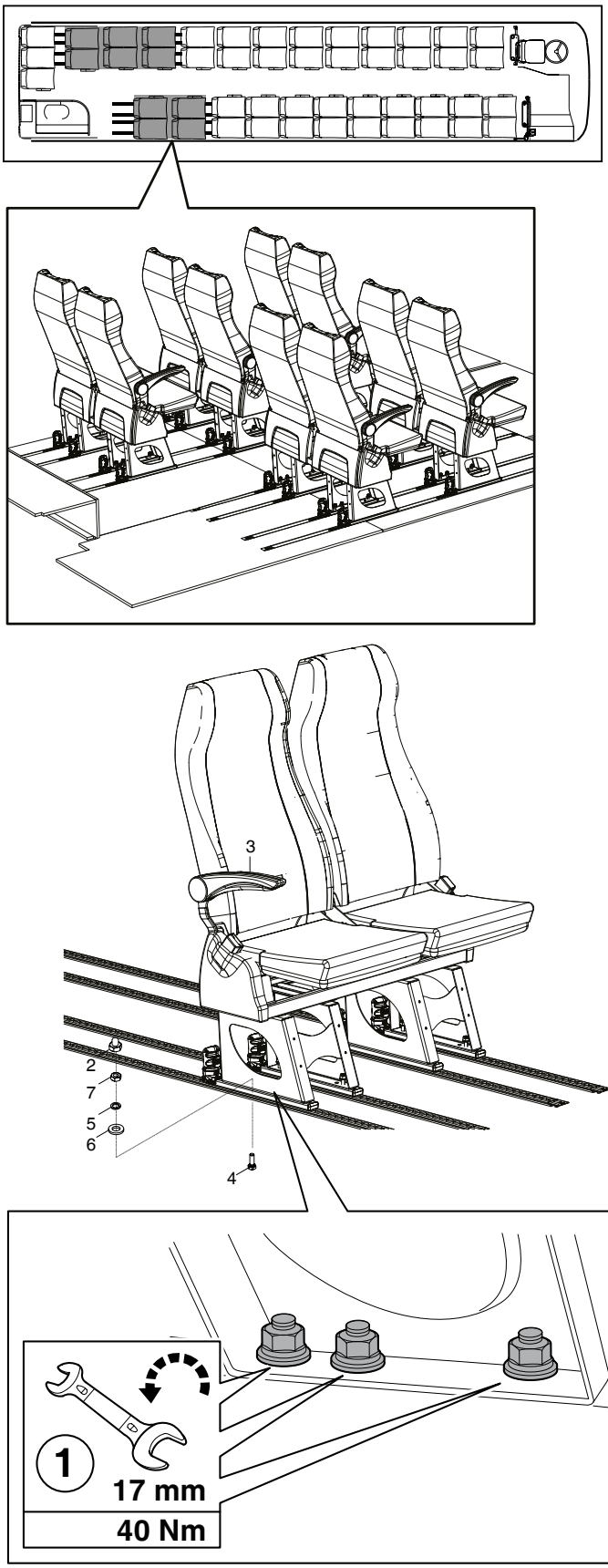

Removal Sequence:

2 - 7 - 4 > 1

Note:
Assembly Sequence is the reverse order of Removal Sequence.

No	PART LIST
1.	SEAT
2.	NUT COVER
3.	ARMREST
4.	BOLT
5.	WASHER PLAIN
6.	WASHER PLAIN
7.	NUT

2.5. REMOVING RAIL SEAT

1. Unscrew the window side bolts of seat. Remove the seat completely.

20 LIGHTS

Rev.00 / 25.03.14

1. TOOLS 2

2. SPECIFICATION 3

3. SERVICE PROCEDURE – EXTERIOR 4

3.1. Removing Front Light 4

3.2. Removing Front Light Bulb 5

3.3. Removing Lower Front Light Bulb 6

3.3. Removing Lower Front Light Bulb 7

3.4. Removing Side Light Bulb 8

3.6. Removing Side/Rear/Front Reflector Light 10

3.7. Removing License Plate Light 11

3.9. Front Light Adjustment 12

3.9. Front Light Adjustment 13

3.9.1 Fog Light Adjustment 14

4. SERVICE PROCEDURE – INTERIOR 15

4.1. Removing Corridor Lights 15

4.2. Removing Step Lights 16

4.3. Removing Luggage Compartment Lights 17

4.4. Removing Engine Compartment Lights 18

GENERAL

- If work is performed by people who do not have the necessary training to carry out the work or if this information is handled carelessly or totally ignored, this may result in severe injury and/or death. Inaddition, serious damage to the vehicle may occur.
- Always read the safety instructions in full before starting certain operations. The safety instructions stipulate which aspects must be considered to achieve maximum safety. The information is given that is very important for health and safety.
- Always work in adequately ventilated rooms with sufficient lighting, free from dirt and clutter. Never leave tools or parts lying around, keep away from (high-) voltage sources that present a risk of short-circuiting. Always wear protective clothing. Do not wear any damaged or loose-fitting clothing and remove jewelry before starting the work. In case of long hair use hairnet.

1. TOOLS

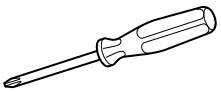 Screw Driver	

2. SPECIFICATION

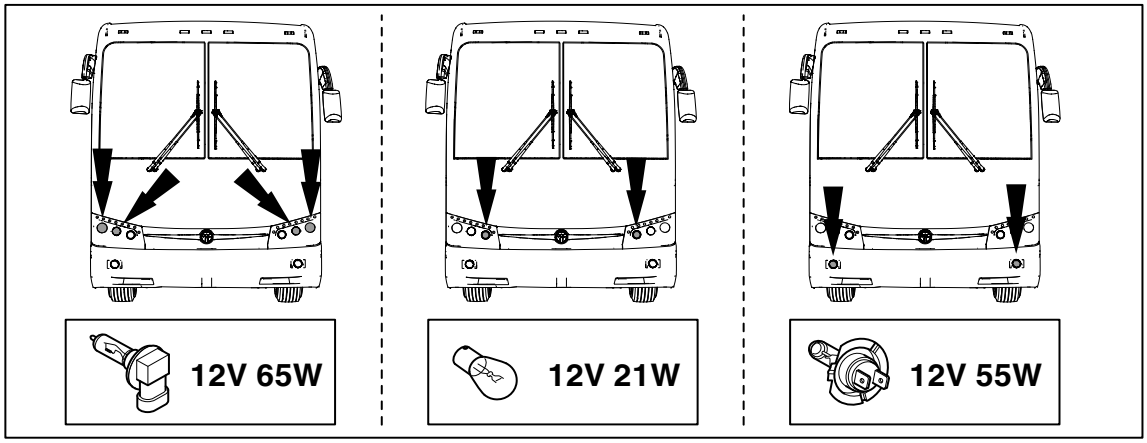

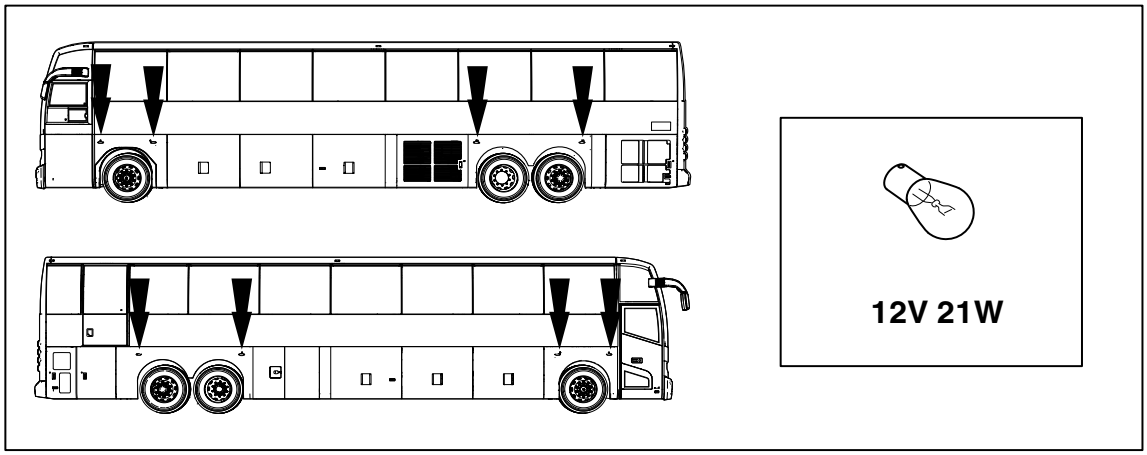

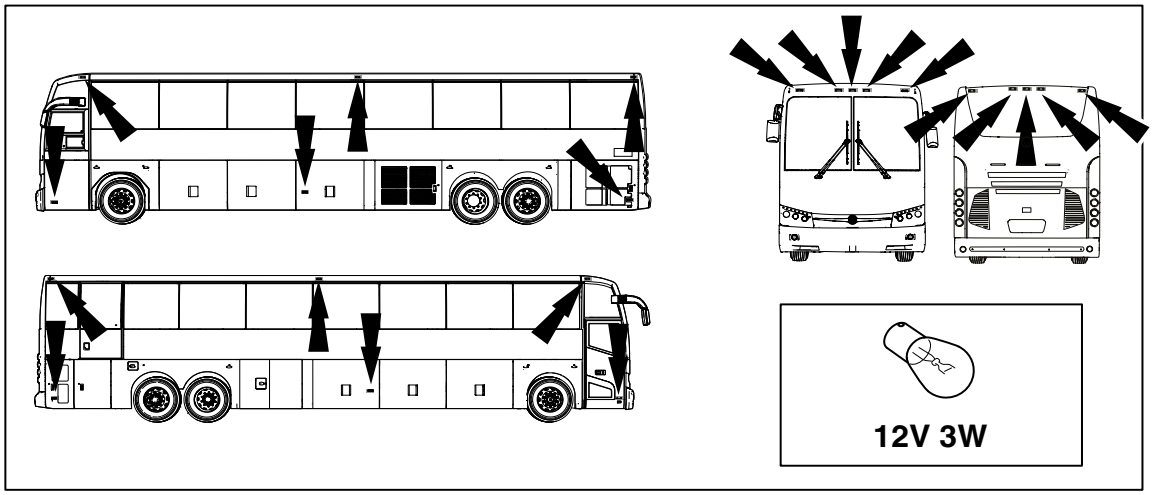

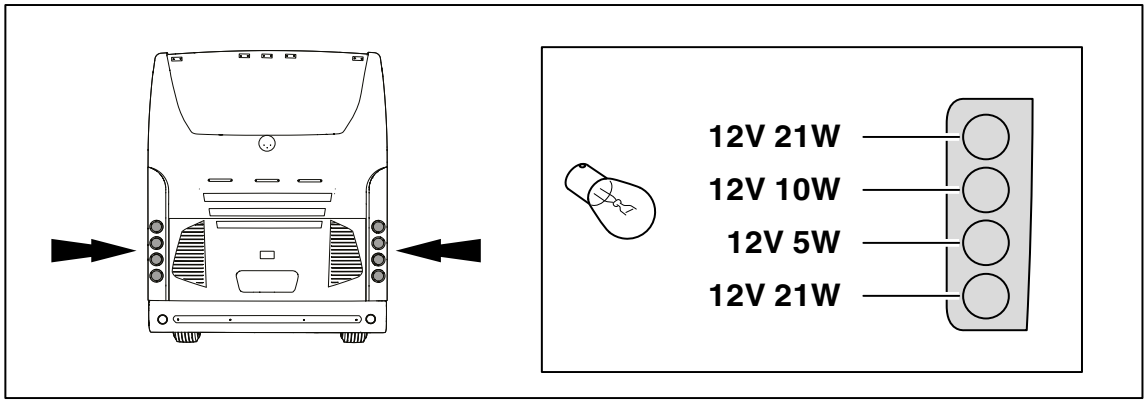

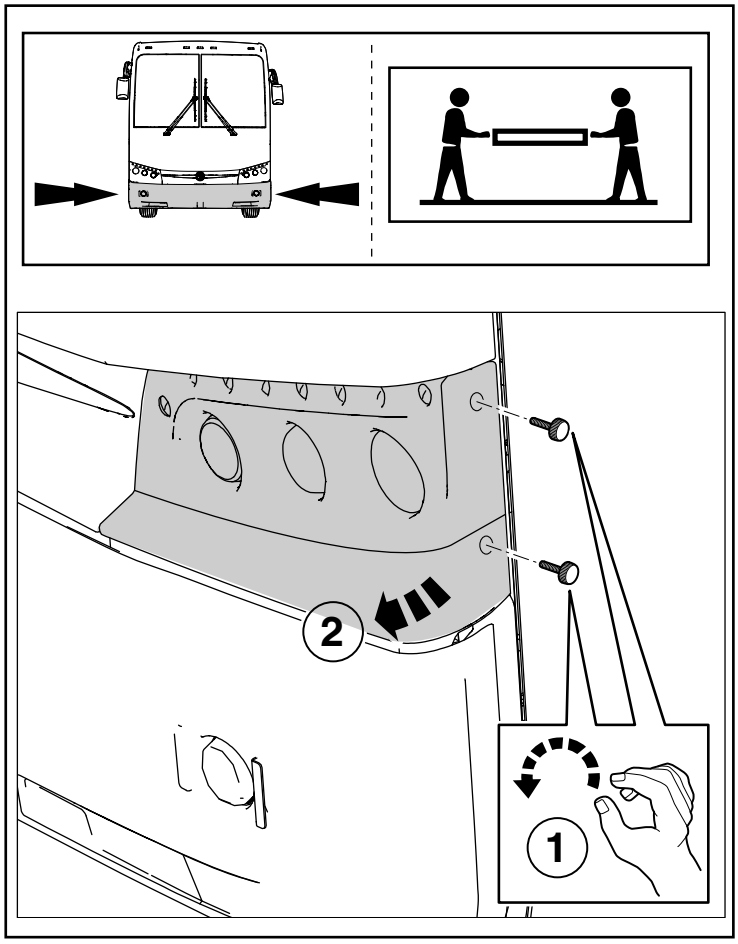

3. SERVICE PROCEDURE – EXTERIOR

3.1. REMOVING FRONT LIGHT

1. Remove the 2 retainer screws to release the front light element.
2. Swing the front light element forward.

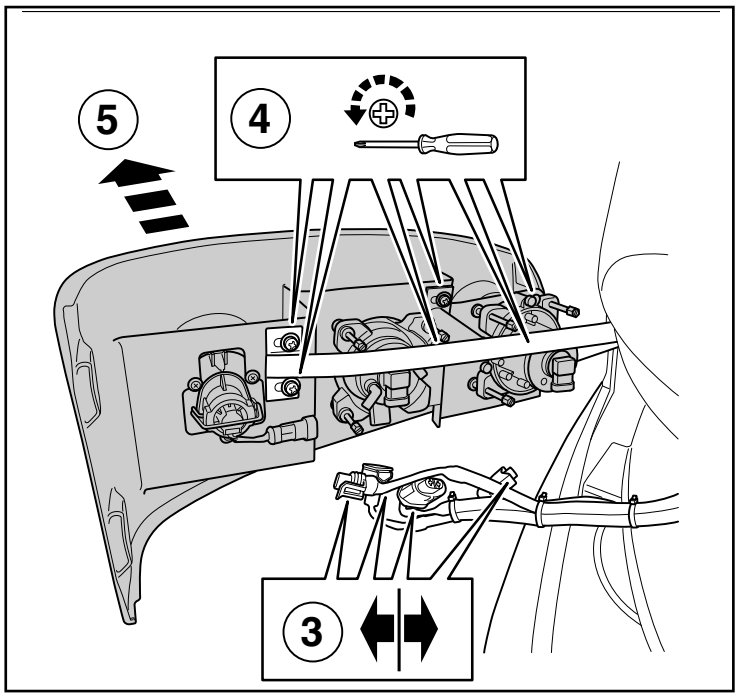

3. Disconnet the 4 connectors.
4. Unscrew the 6 philips head screws.
5. Remove front light element.

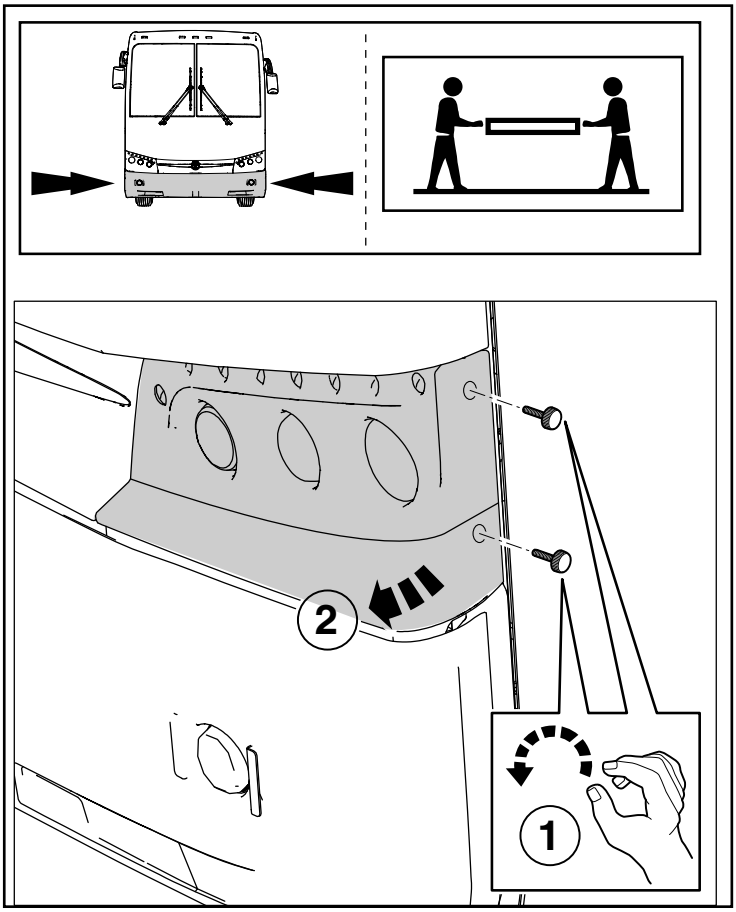

3.2. REMOVING FRONT LIGHT BULB

1. Remove the 2 retainer screws to release the front light element.
2. Swing the front light element forward.

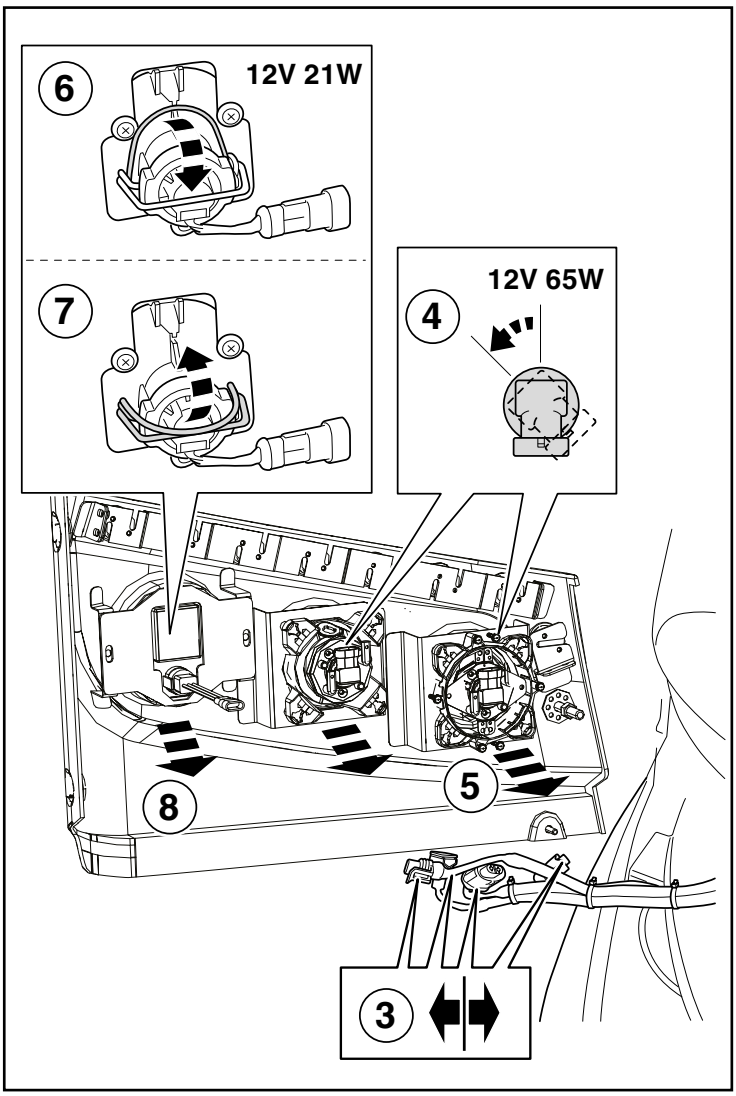

3. Disconnect the respective connector for bulb that needs to be changed.
4. Inside and middle bulb, turn 45° anti clockwise.
5. Remove respective bulb (12V 65W).
6. Outside bulb, pull down wire.
7. Outside bulb, push up wires to release bulb.
8. Remove bulb (12V 21W).

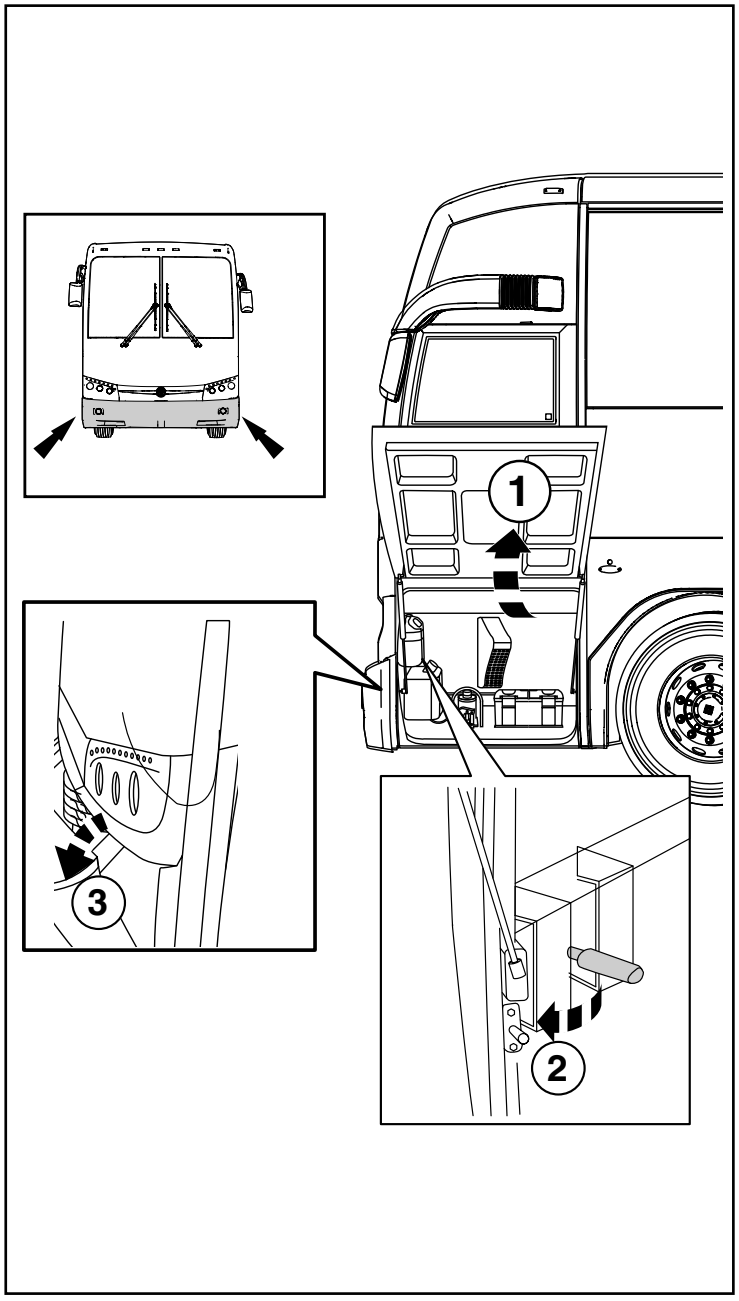

3.3. REMOVING LOWER FRONT LIGHT BULB

1. Open the front lid.
2. Pull handle to release front bumper.
3. Lower front bumper

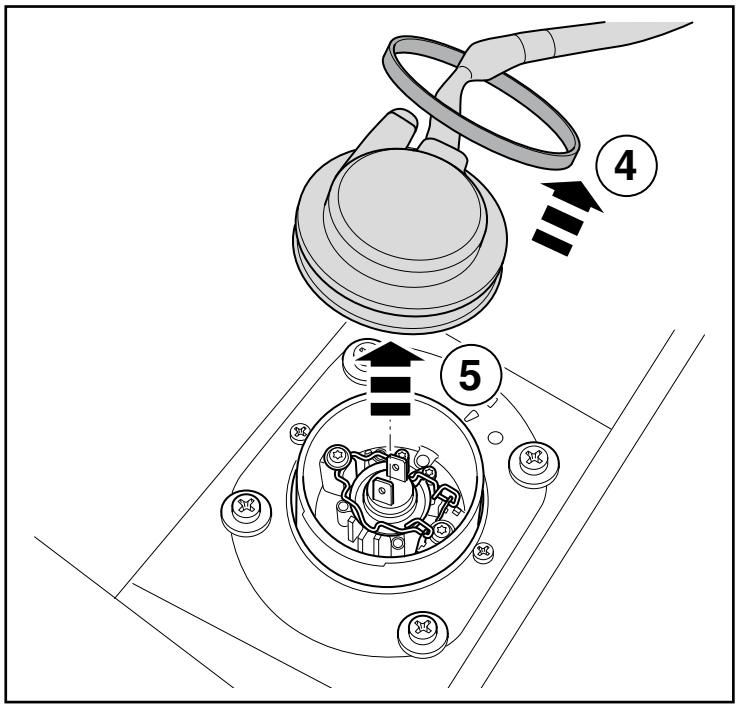

4. Remove the band around the rubber cap.
5. Remove rubber cap.

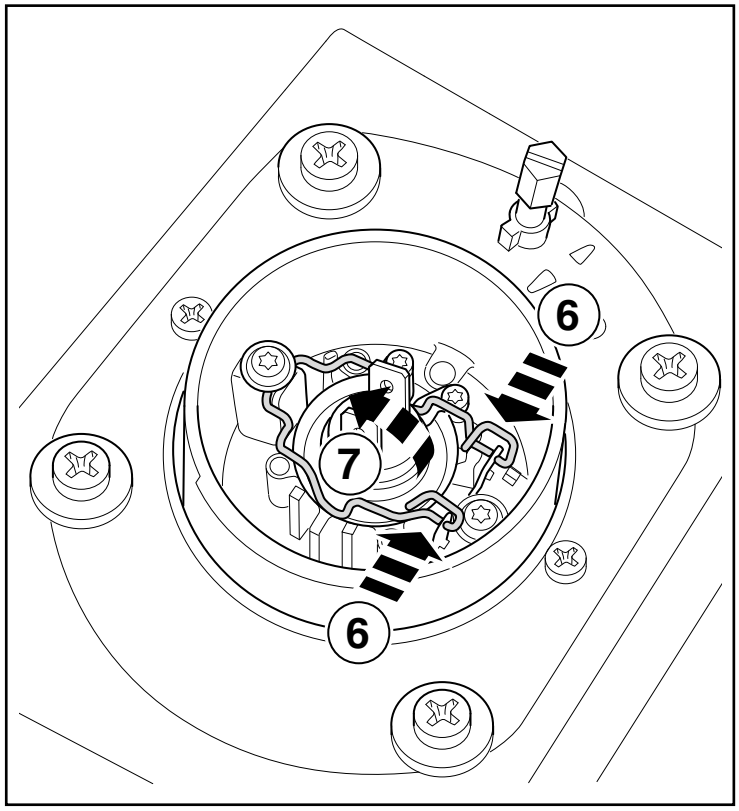

3.3. REMOVING LOWER FRONT LIGHT BULB

6. Push the fixing wire spring towards the center to release.
7. Push the fixing wire spring upwards.

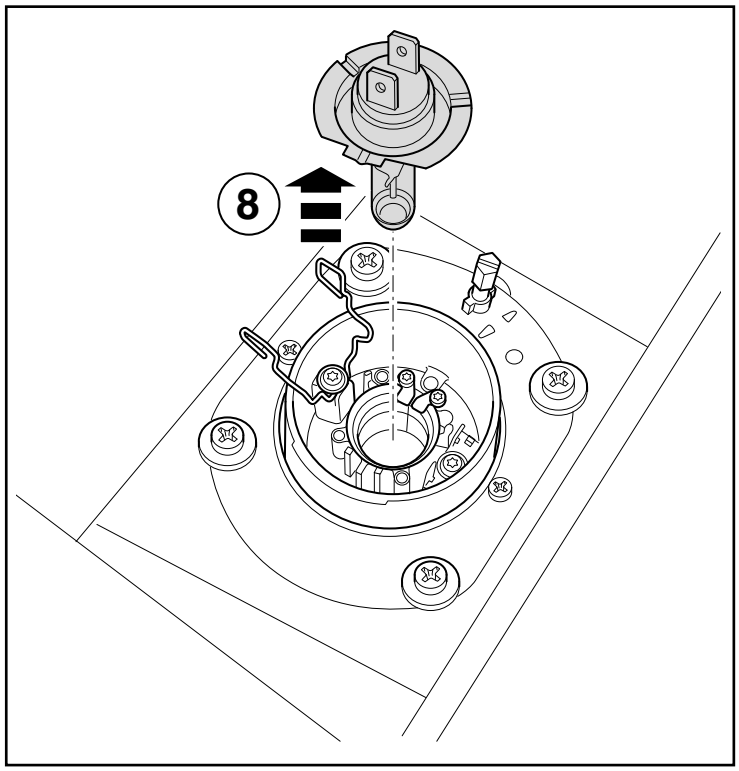

8. Remove bulb (12V 55W).

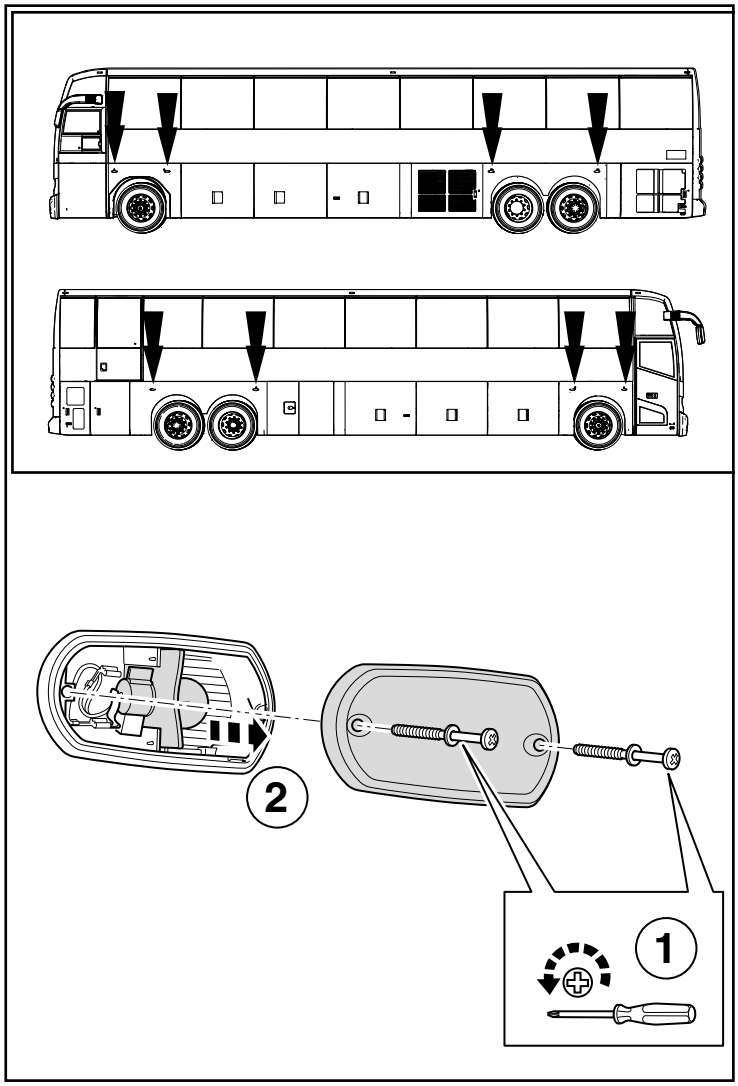

3.4. REMOVING SIDE LIGHT BULB

1. Remove the 3 screws to release the cap.
2. Pull out bulb with housing.

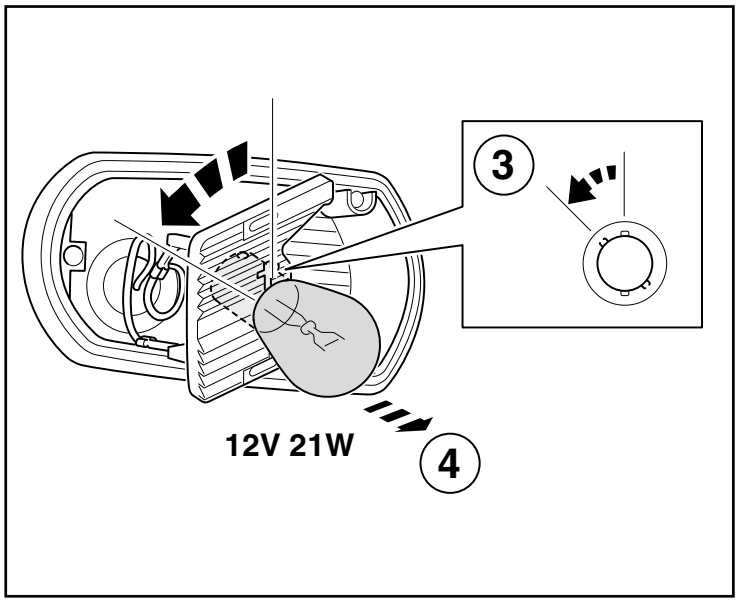

3. Turn bulb 45° anti clockwise.
4. Remove bulb (12V 21W).

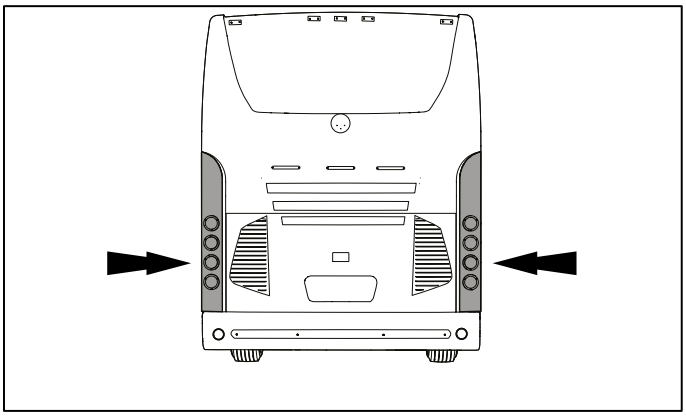

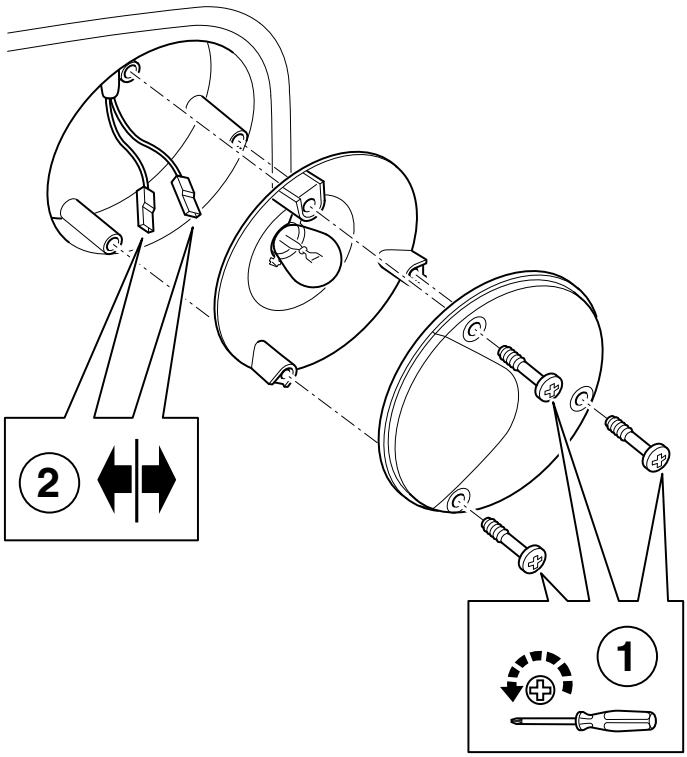

3.5. REMOVING REAR LIGHT BULB

1. Remove the 3 screws to release the cap and rear light element.
2. Disconnect.

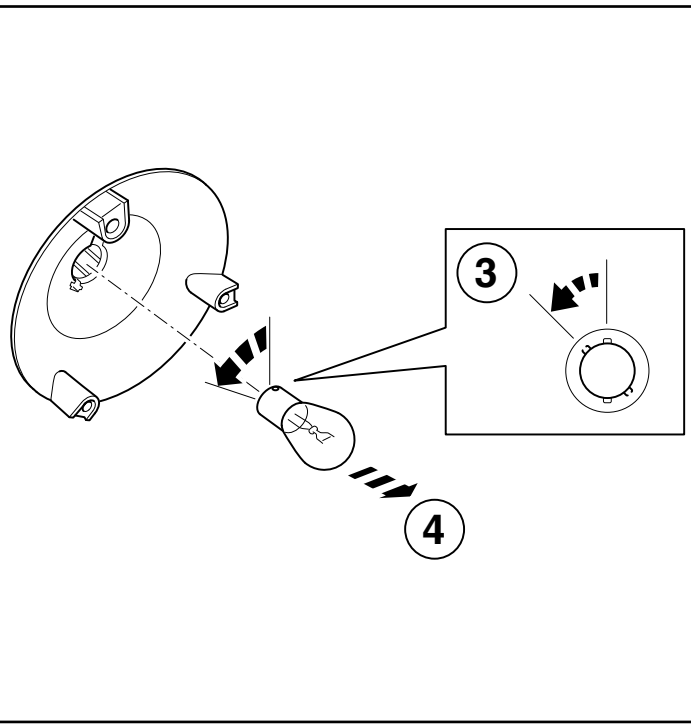

3. Turn bulb 45° anti clockwise.
4. Remove bulb.

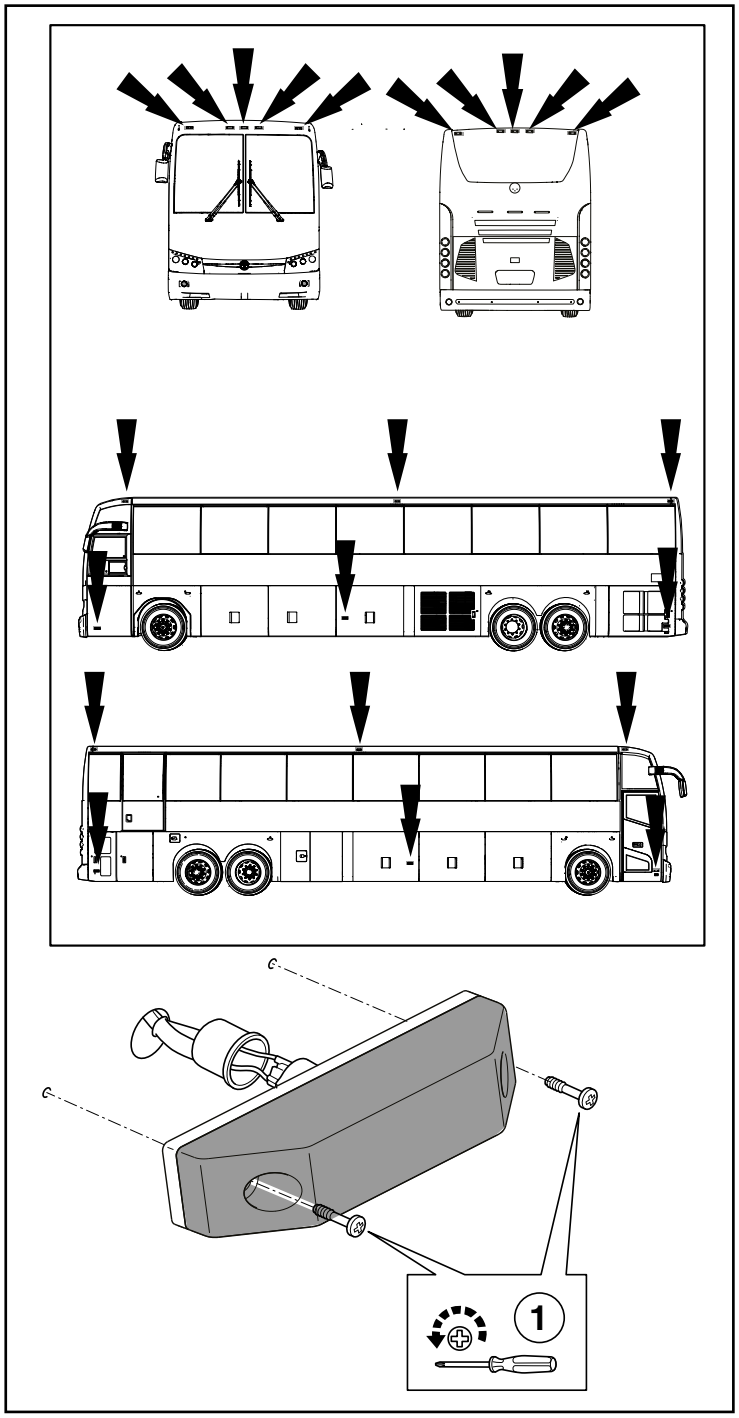

3.6. REMOVING SIDE/REAR/FRONT REFLECTOR LIGHT

1. Remove the 2 screws to release cap.

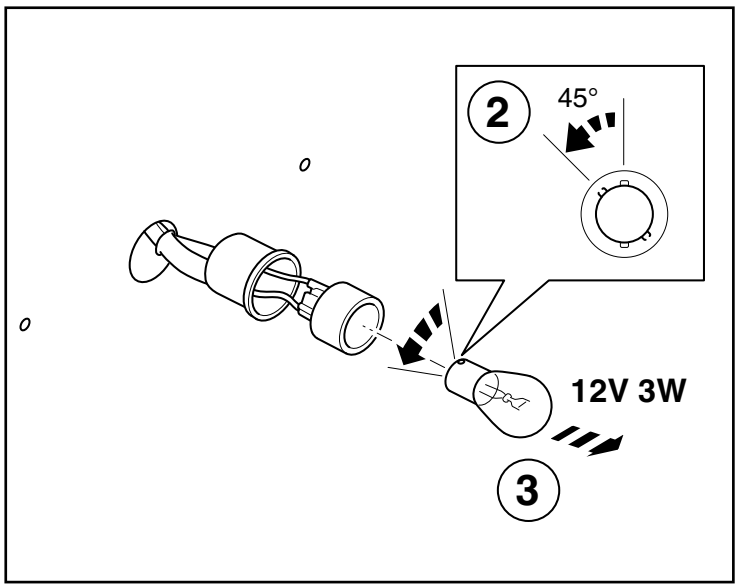

2. Turn bulb 45° anti clockwise.
3. Remove bulb (12V 3W).

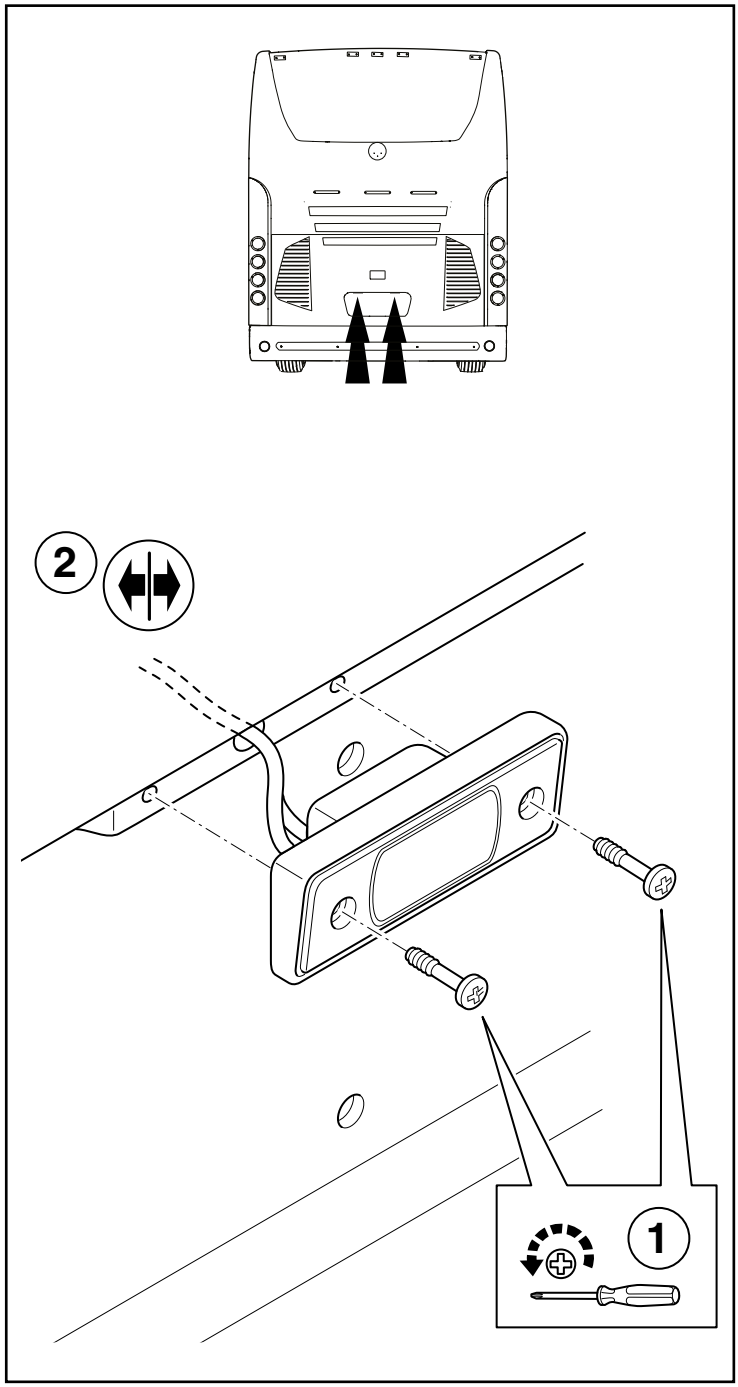

3.7. REMOVING LICENSE PLATE LIGHT

1. Remove the 2 screws to release cap.
2. Disconnect the license plate light behind the lid.

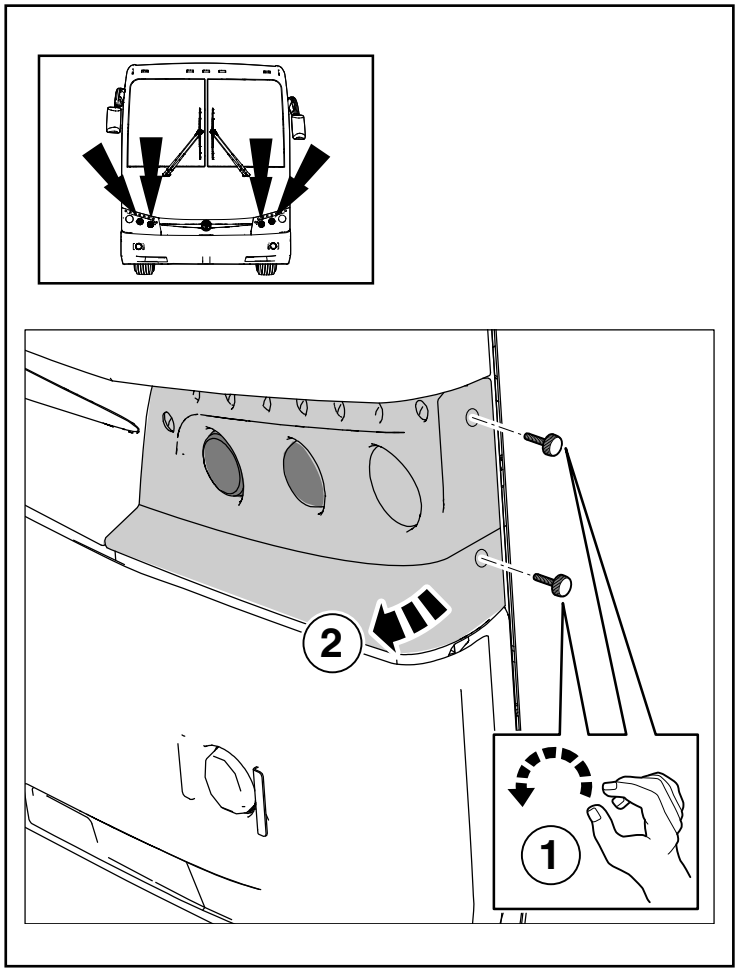

3.9. FRONT LIGHT ADJUSTMENT

1. Remove the 2 retainer screws to release the front light element.
2. Swing the front light element forward.

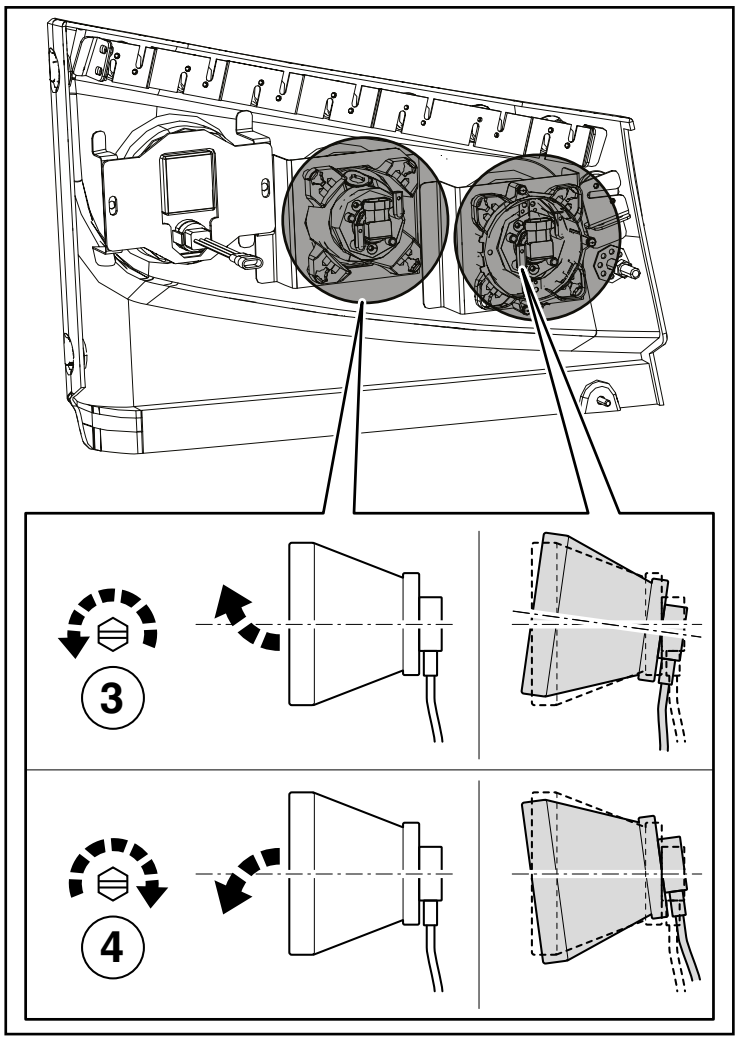

3. Turn lower left adjuster bolt anti clockwise to turn headlamp upward.
4. Turn lower left adjuster bolt clockwise to turnheadlamp downward.

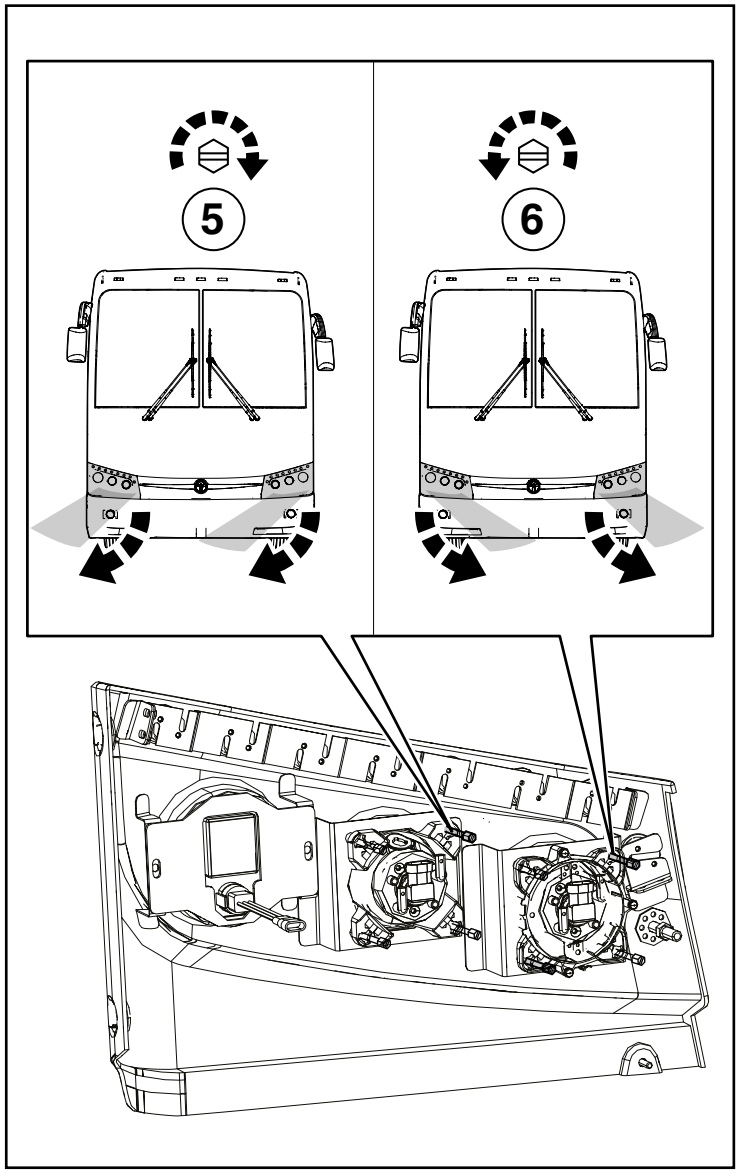

3.9. FRONT LIGHT ADJUSTMENT

5. Turn top right adjuster bolt clockwise to turn the headlamp right.
6. Turn top right adjuster bolt anti clockwise to turn the headlamp left.

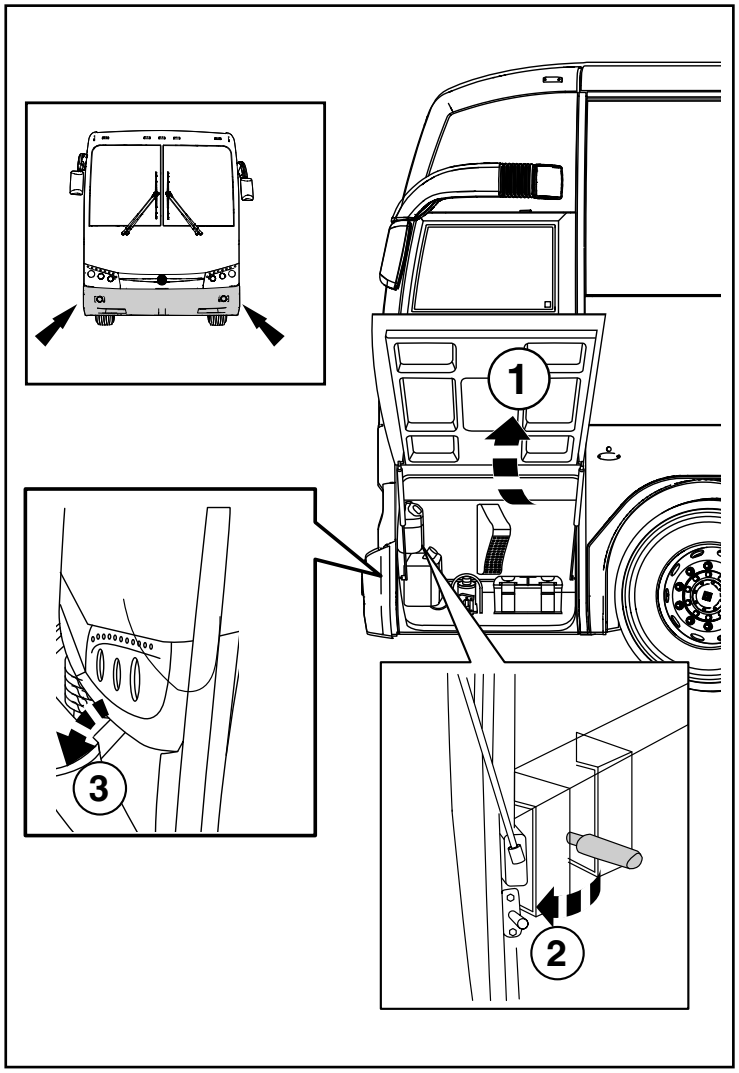

3.9.1 FOG LIGHT ADJUSTMENT

1. Open the front lid.
2. Pull handle to release front bumper.
3. Lower front bumper

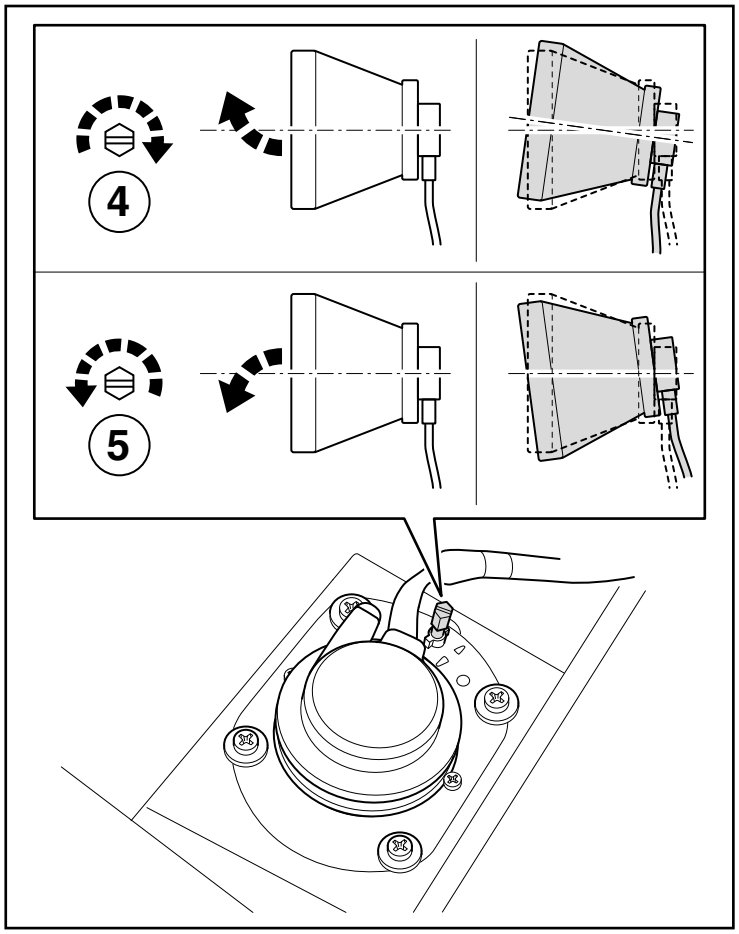

4. Turn adjuster bolt clockwise to turn foglamp upward.
5. Turn adjuster bolt anti clockwise to turn foglamp downward.

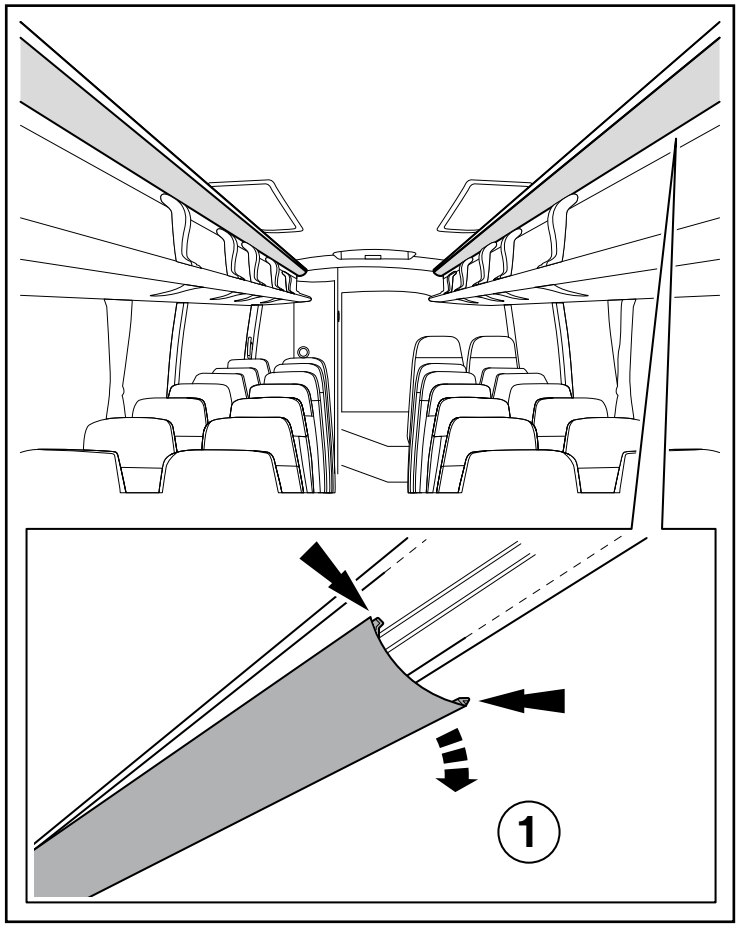

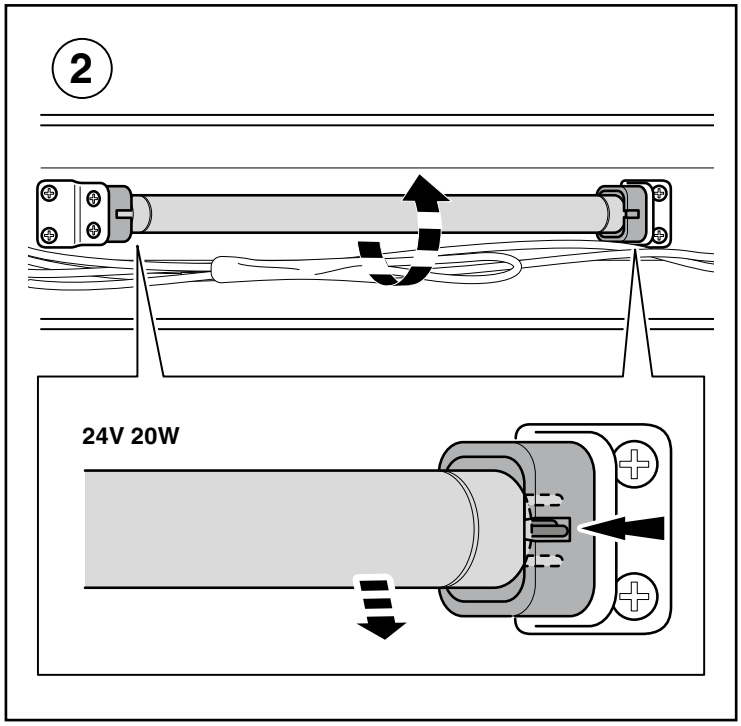

4. SERVICE PROCEDURE – INTERIOR

4.1. REMOVING CORRIDOR LIGHTS

1. Release light cover by unclipping and pulling out of rail.
2. Remove halogen bulb (24V 20W) by rotating.

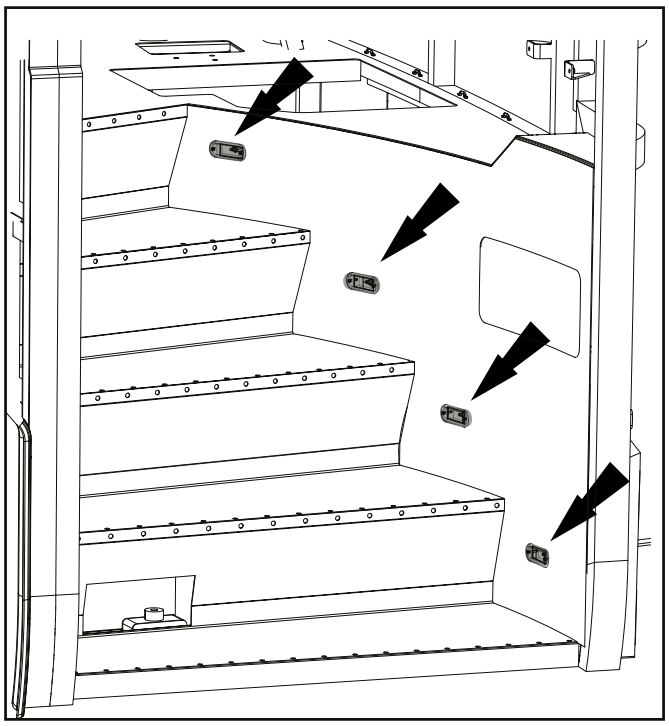

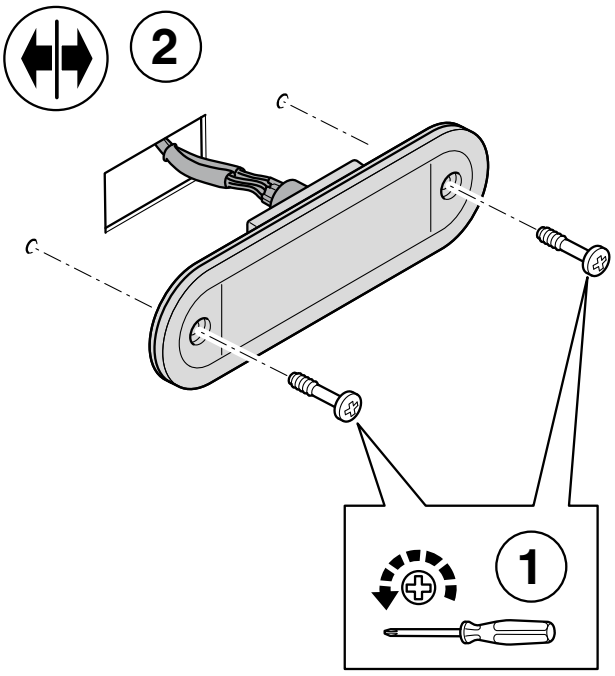

4.2. REMOVING STEP LIGHTS

1. Unscrew 2 screws.
2. Disconnect the step light and replace.

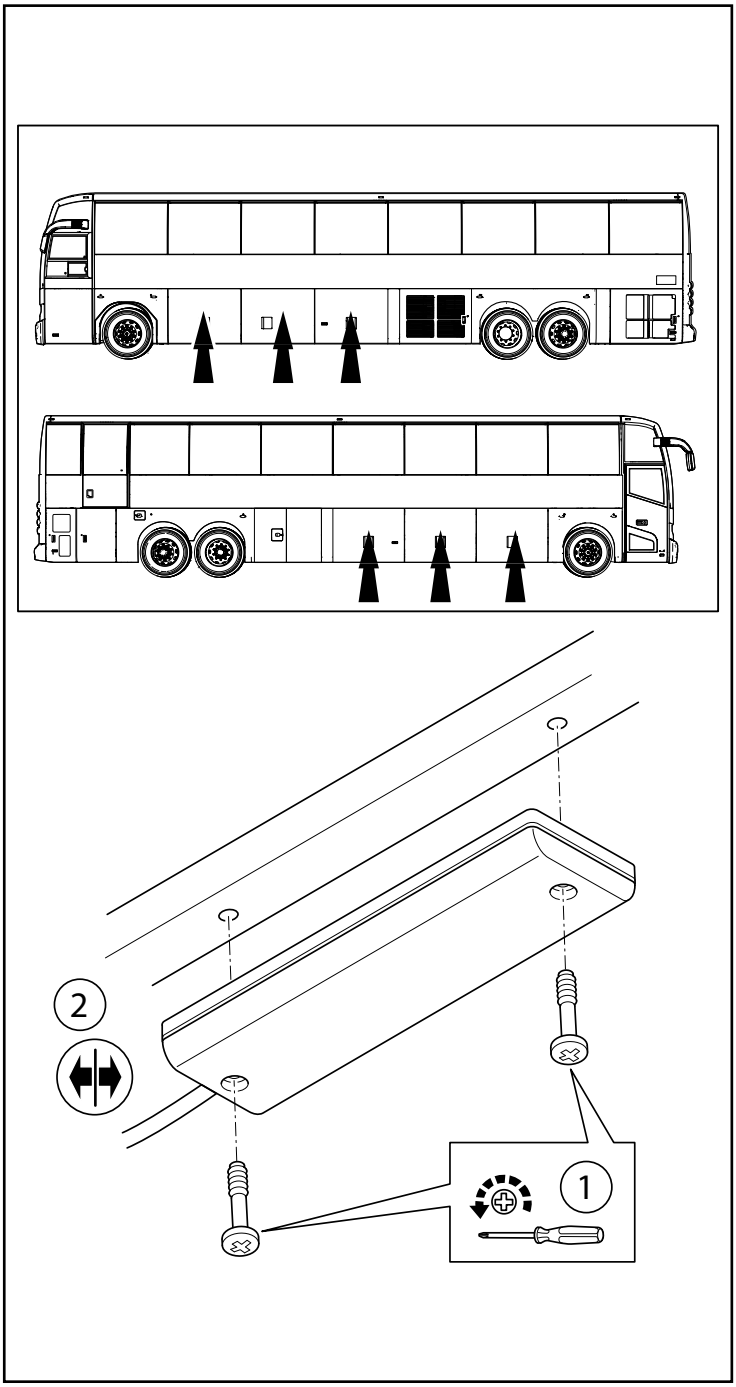

4.3. REMOVING LUGGAGE COMPARTMENT LIGHTS

1. Unscrew 2 screws.
2. Disconnect the luggage compartment light and replace the whole LED-Unit.

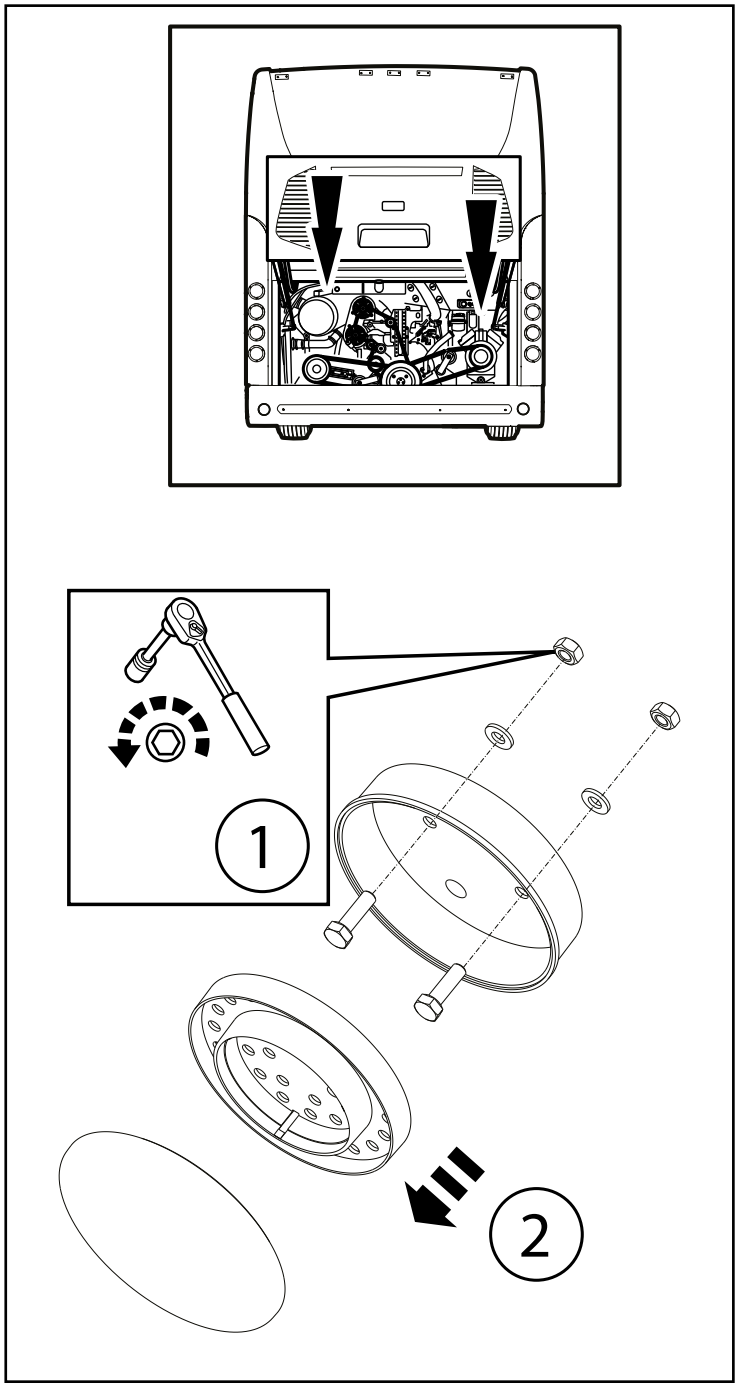

4.4. REMOVING ENGINE COMPARTMENT LIGHTS

1. Unscrew screw.
2. Remove metal and plastic cover.

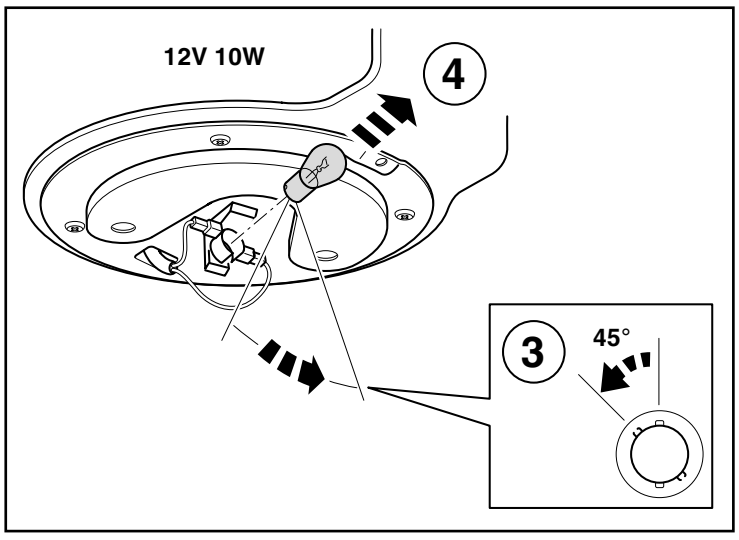

3. Turn bulb 45° anti-clockwise.
4. Remove bulb (12V 10W).

21 WINDOWS

Rev.00 / 25.03.14

1. TOOLS 2

2. SPECIFICATIONS 3

3. STRUCTURE AND OPERATION 3

3.1. Rules For Assembly And Removal Of Glass 3

3.2. Preparing Glass For Assembly 3

3.3. Preparing Glass For Re-Use 3

4. SERVICE PROCEDURE 4

4.1. Disassembly Of The Windscreen Wiper 4

4.2. Removing Of Windscreen Glass With Weatherstrip 5

4.3. Removing Of Windscreen Glass With Weatherstrip 6

4.3.1. Installation Of Windscreen Glass With Weatherstrip 7

4.4. Removing Of Emergency Window 9

4.4.1 Installation Of Emergency Window 12

4.5. Removing Of Fixed Window 15

4.5.1 Installation Of Fixed Window 18

GENERAL

- If work is performed by people who do not have the necessary training to carry out the work or if this information is handled carelessly or totally ignored, this may result in severe injury and/or death. Inaddition, serious damage to the vehicle may occur.
- Always read the safety instructions in full before starting certain operations. The safety instructions stipulate which aspects must be considered to achieve maximum safety. The information is given that is very important for health and safety.
- Always work in adequately ventilated rooms with sufficient lighting, free from dirt and clutter. Never leave tools or parts lying around, keep away from (high-) voltage sources that present a risk of short-circuiting. Always wear protective clothing. Do not wear any damaged or loose-fitting clothing and remove jewelry before starting the work. In case of long hair use hairnet.

1. TOOLS

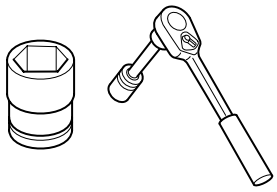 Impact Socket	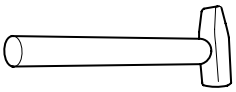 Hammer	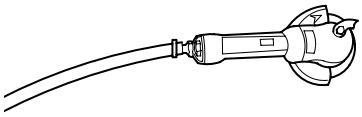 Grinder
 Gasoline	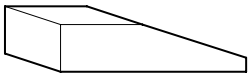 Chock	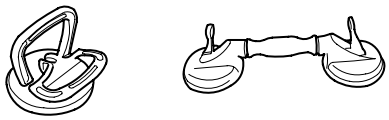 Rubber Suction
 Activator	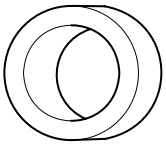 Band	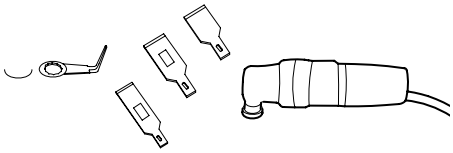 Sealer Cutting Machine
 Primer	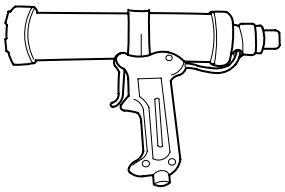 Sealer Machine	

2. SPECIFICATIONS

Front	One or two pieces laminated safety glass.
Side	Double glazed tempered safety glass with 50% light transfer (standard). Single tempered safety glass with 50% light transfer (option).
Rear	One piece double glazed tempered safety glass.
Driver's	Single sliding type manually operated without electrical resitance (standard). Electrically operated (option).

3. STRUCTURE AND OPERATION

3.1. RULES FOR ASSEMBLY AND REMOVAL OF GLASS

1. Cover glass with a protective band to protect against scratching and damage.
2. Keep adhesive away from eyes and skin. Use safety gloves and glasses see workshop dress code in chapter Foreword on page 13.
3. Put adhesive only in suitable container.
4. Secure glass against falling. Use only specific holders and safety shoes.
5. Use sticker band to protect glass from overflow of sealer.
6. During assembly be careful of health risks.
7. Use protection against glass breaking.
8. Be careful when using the cutter tools.
9. Always work in well ventilate area.



WARNING

Only use adhesive (sealer) in a well ventilated area. Adhesive is poiseness, do not swallow or breath, keep away from eyes and skin it can cause injurys.

3.2. PREPARING GLASS FOR ASSEMBLY

1. Be careful of scratching, see workshop dress code in chapter Foreword on page 13.
2. Mark the center of glass and hold the center of glass with rubber holder.
3. Apply soapy water to the rubber frame and gasket joint.
4. Apply primer onto glass to provide easy attachment of sealer.

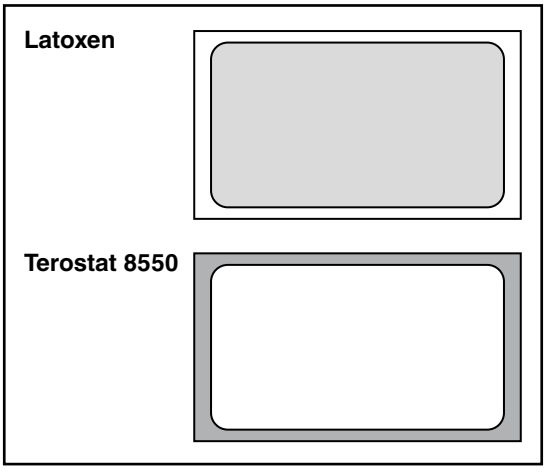

3.3. PREPARING GLASS FOR RE-USE

1. Remove all adhesive remains with cutter.
2. Clean the adhesive surface with activator. Use cleaner fabric for cleaning adhesive surface.
3. Ventilate the activator minimum 10 minutes.
4. Remove the paint and dirt from glass with Terostat 8550. Apply Terostat to adhesive surface only.
5. Completely ventilate Terostat 8550 area.
6. After assembly clean the window with Latoxen. Apply Latoxen to non-adhesive surfaces only.

4. SERVICE PROCEDURE

4.1. DISASSEMBLY OF THE WINDSCREEN WIPER

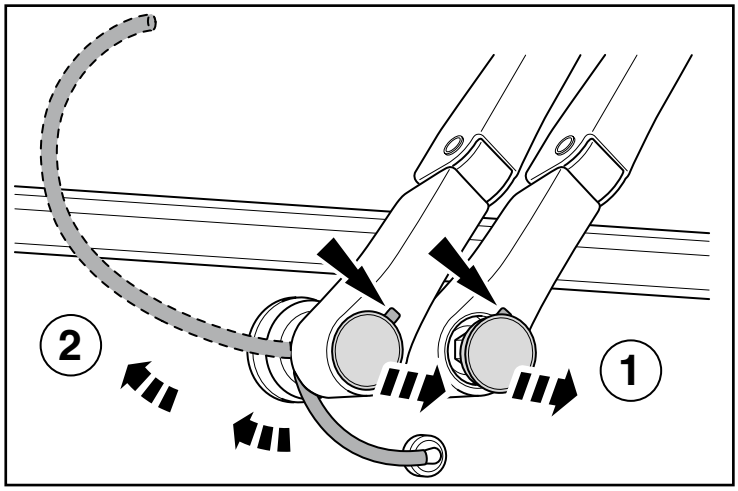

1. Remove the cover.
2. Remove hose and hoist it.

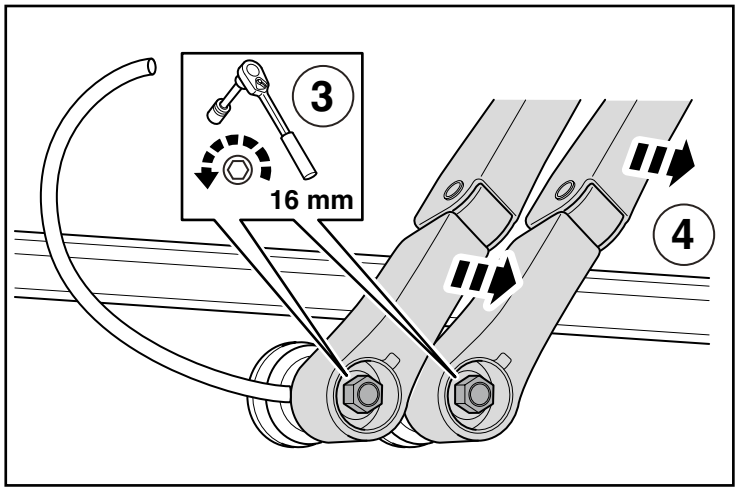

3. Unscrew the nuts.
4. Remove the wiper arms.

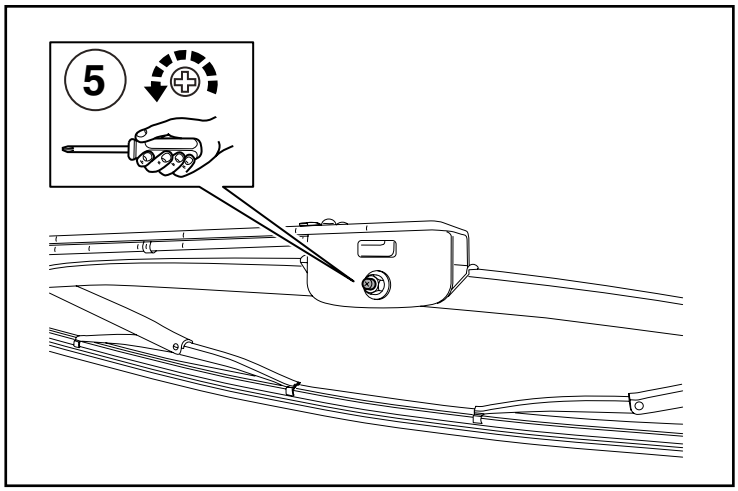

5. Unscrew the screw.

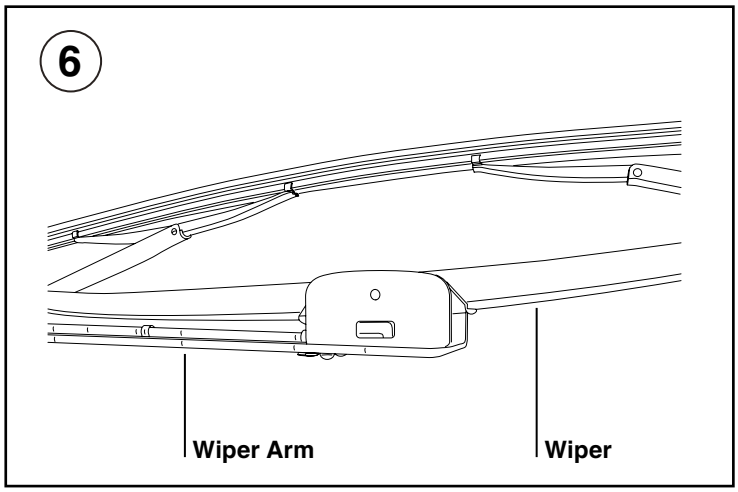

6. Remove the wiper blade assembly from the wiper arm.

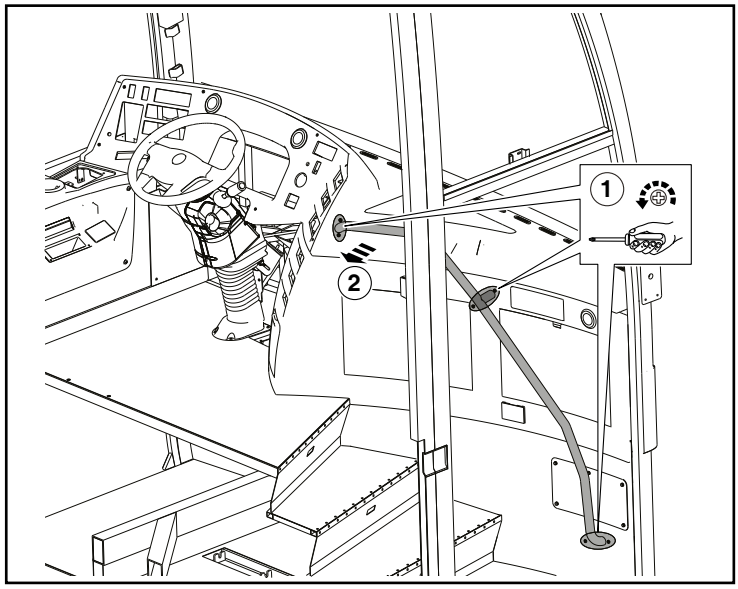

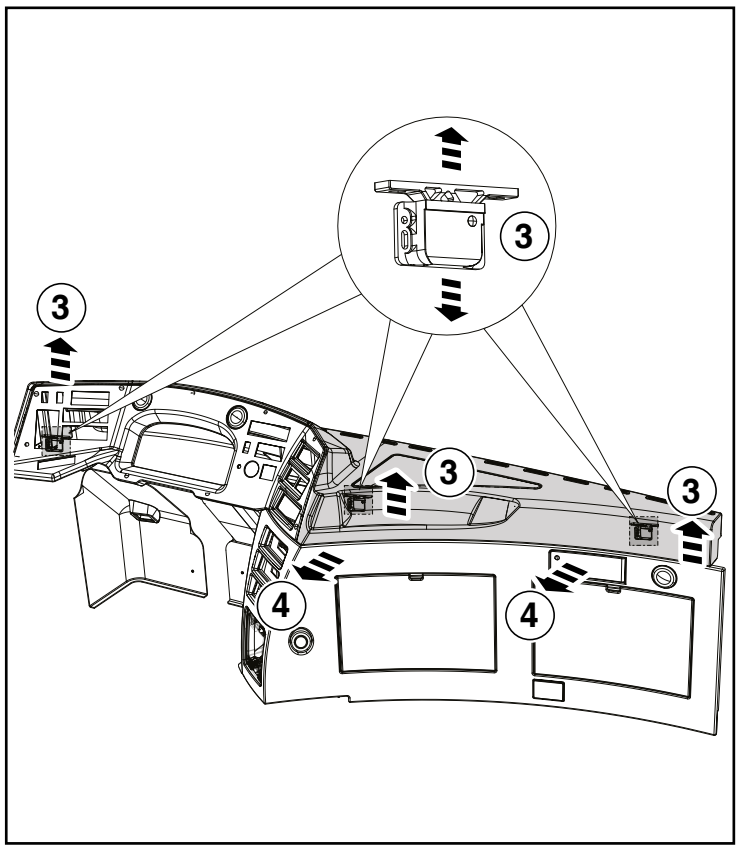

4.2. REMOVING OF WINDSCREEN GLASS WITH WEATHERSTRIP

1. Remove 4 bolts (tool size: 10 mm) to free the top part of the handle.
2. Pull the handle slightly to the rear but do not remove.
3. Pull the dash board upwards, release from 3 clips.
4. Pull the dashboard to the rear but do not remove.

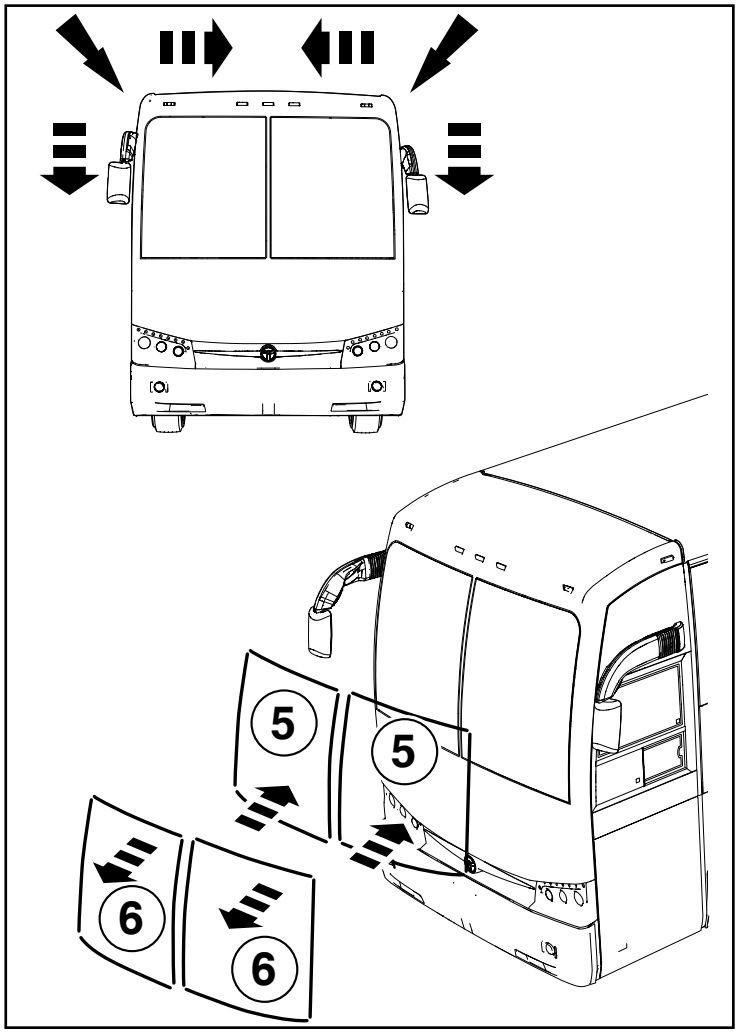

4.3. REMOVING OF WINDSCREEN GLASS WITH WEATHERSTRIP

5. Remove the plastic inner rods, starting from the top outer corner working inwards and downwards.There are 4 per windshield.
6. Remove the plastic outer rods, starting from the top outer corner working inwards and downwards. There are 4 per windshield.

CAUTION

Use liquid soap inside the weather strip for easy removal.

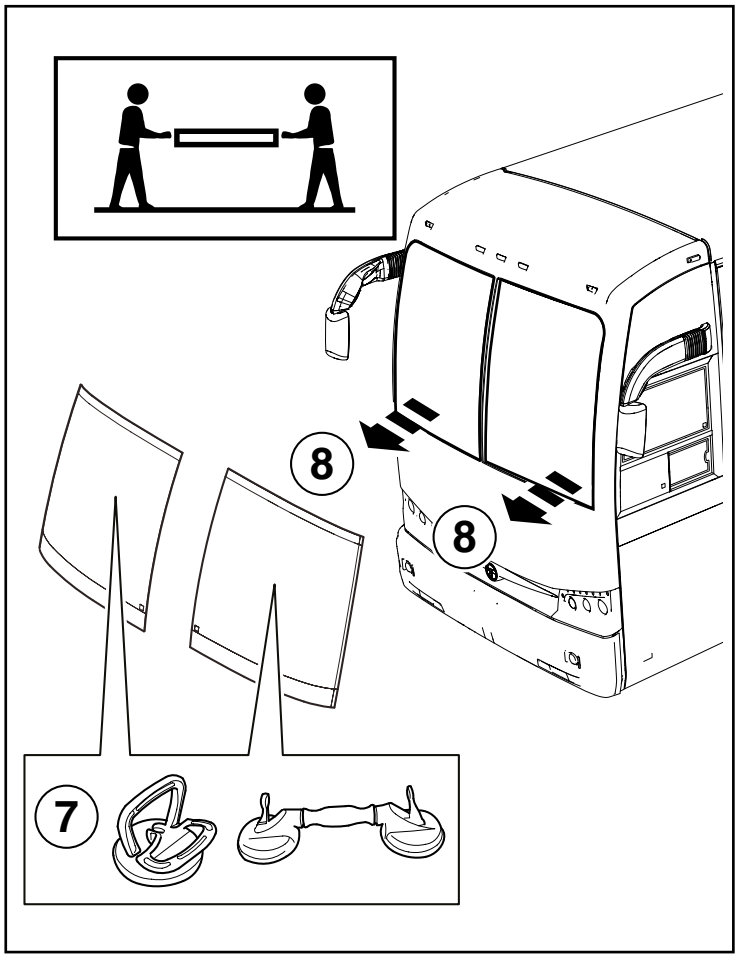

7. Attach vacuum carriers.
8. Remove windshield weatherstrip remains in position.

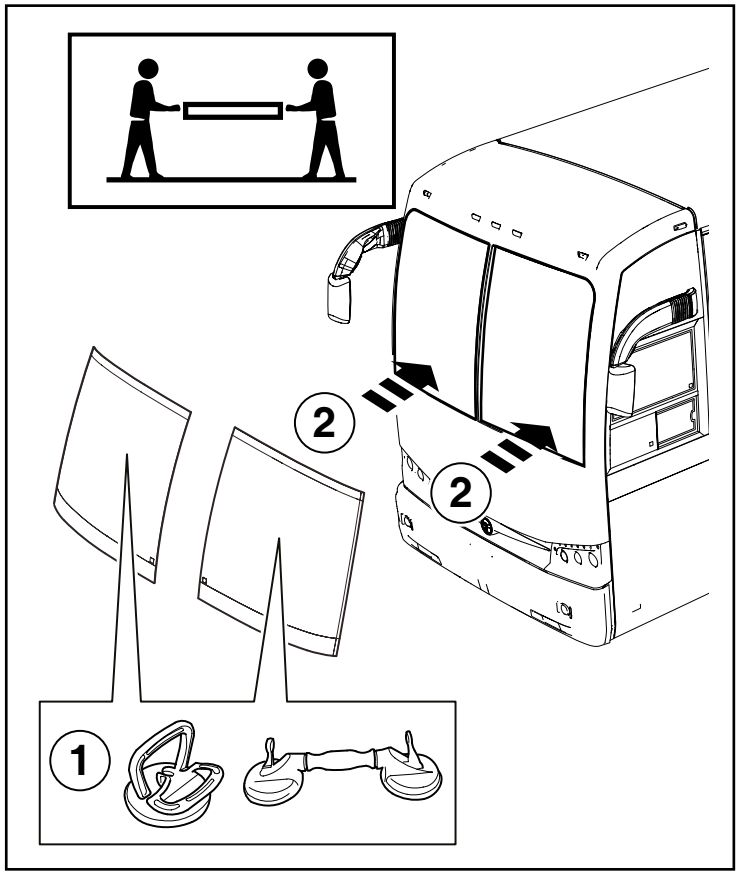

4.3.1. INSTALLATION OF WINDSCREEN GLASS WITH WEATHERSTRIP

1. Attach vacuum carriers.
2. Install windshield into weatherstrip.

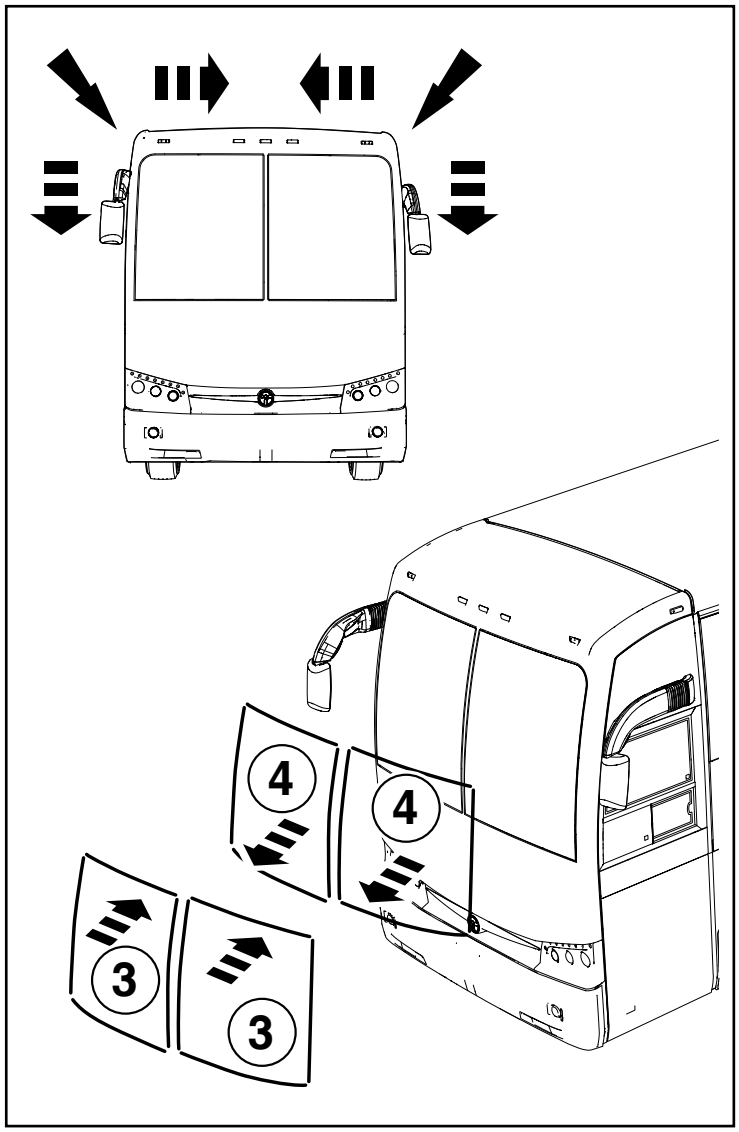

3. Install the outer plastic outer rods, starting from the top outer corner working inwards and downwards. There are 4 per windshield.
4. Install the inner the plastic outer rods, starting from the top outer corner working inwards and downwards. There are 4 per windshield.

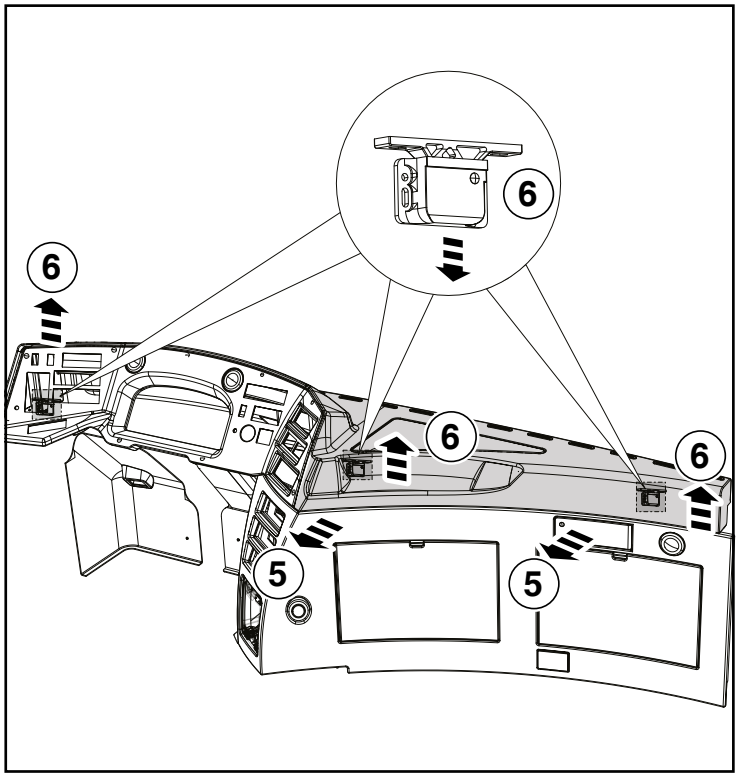

4.3.1. INSTALLATION OF WINDSCREEN GLASS WITH WEATHERSTRIP

5. Push the dashboard forwards.
6. Push the dash board downwards, and fix into 3 fixation clips.

CAUTION

Use liquid soap inside the weather strip for easy installation.

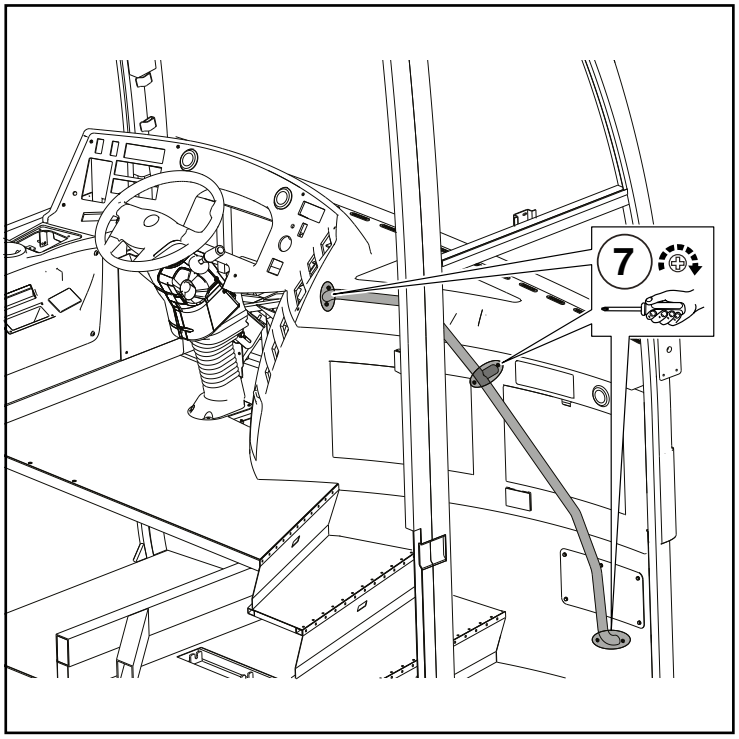

7. Install the handle 4 bolts (tool size: 10 mm).

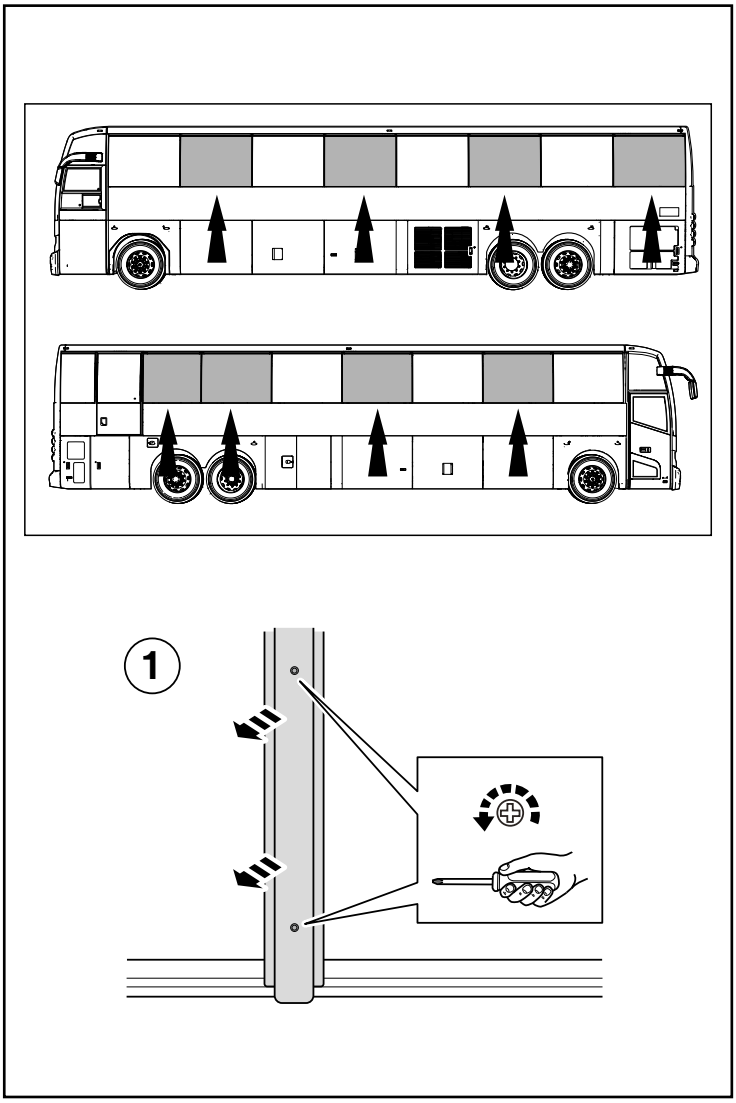

4.4. REMOVING OF EMERGENCY WINDOW

1. Remove the inner trim parts around window by unscrewing the 2 screws.

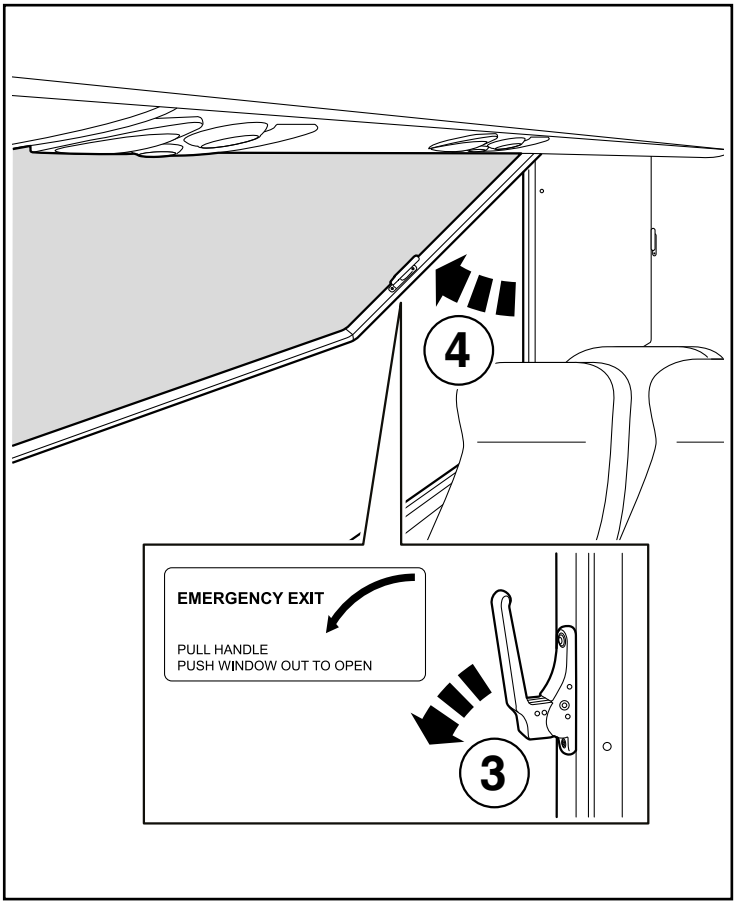

2. Release the handle.
3. Open the window

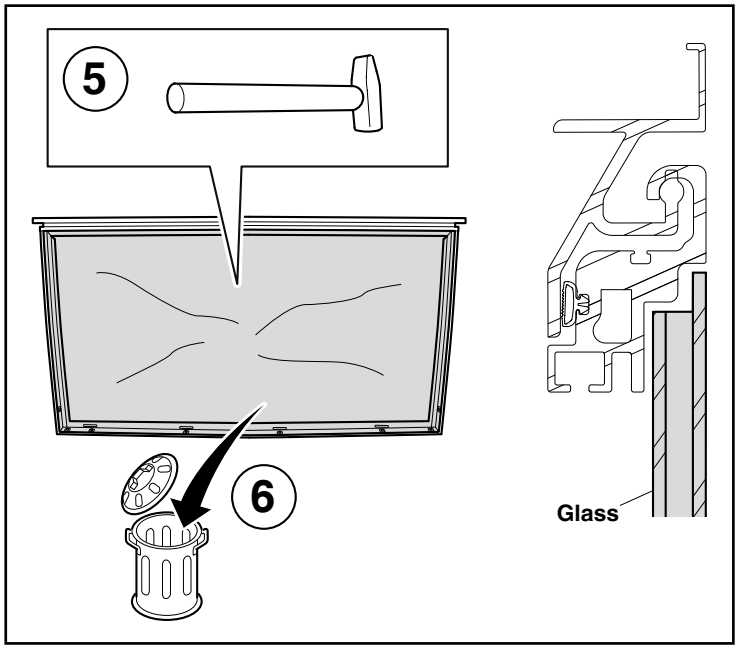

4.4. REMOVING OF EMERGENCY WINDOW

4. Brake the window and clean the frames.
5. Throw away window.

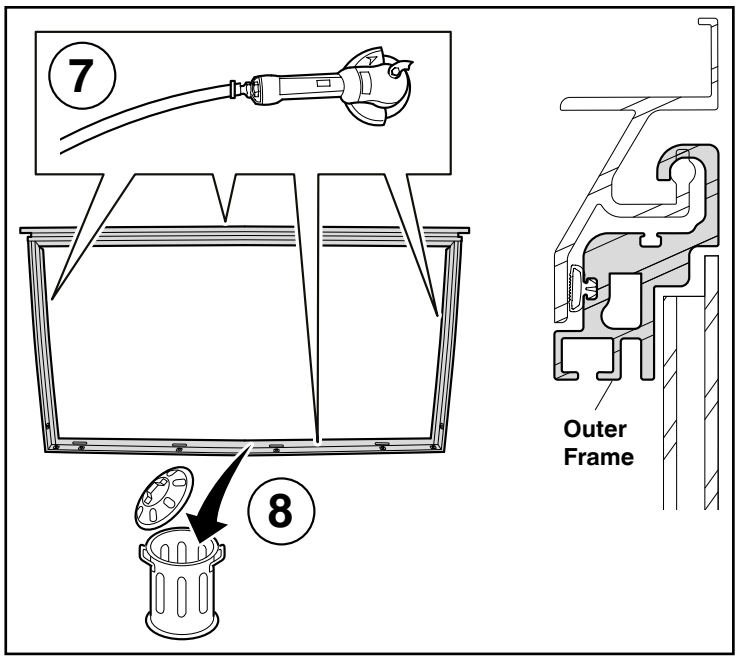

6. Using a grinder to cut the outer frame out from where it is sealed.
7. Throw away outer frame.

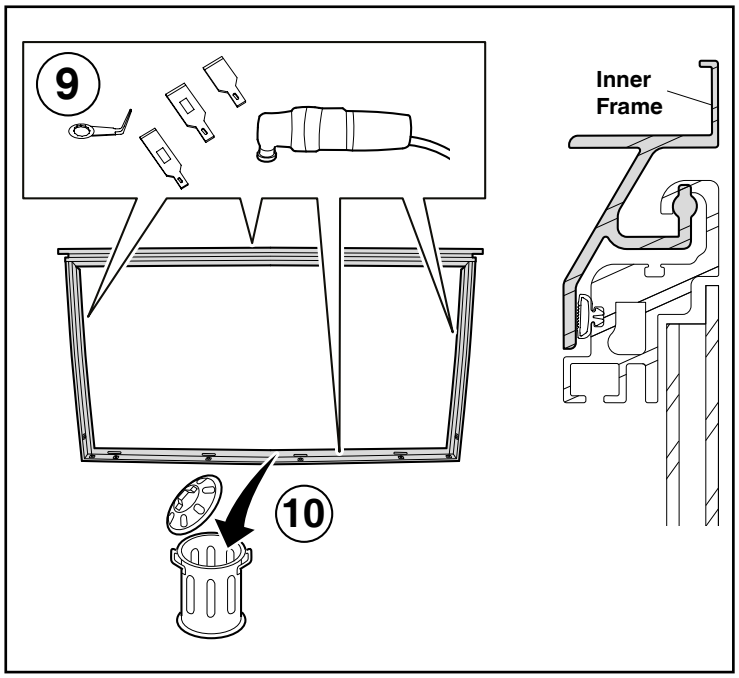

8. Using a sealer cutting machine cut the inner frame which is on the body where it is sealed.
9. Throw away inner frame.

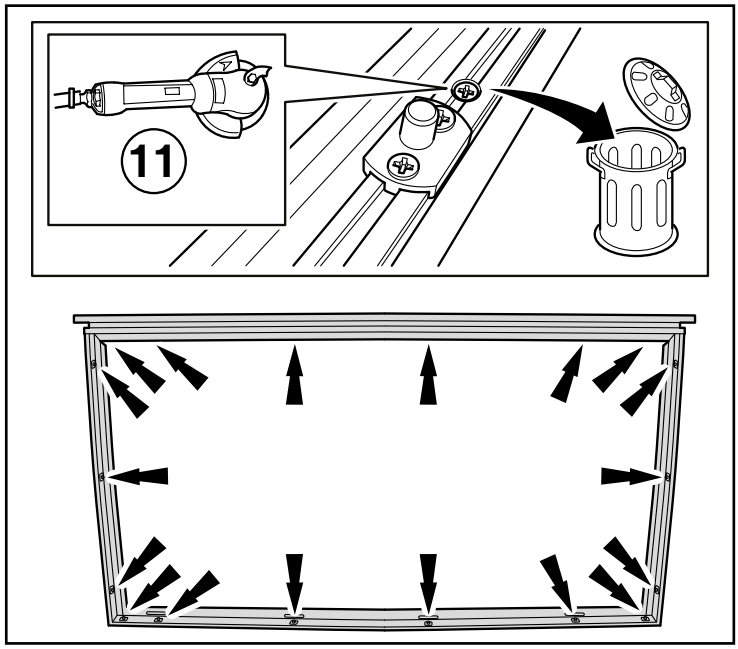

4.4. REMOVING OF EMERGENCY WINDOW

10. Cut the screws that fix the inner frame to the body.

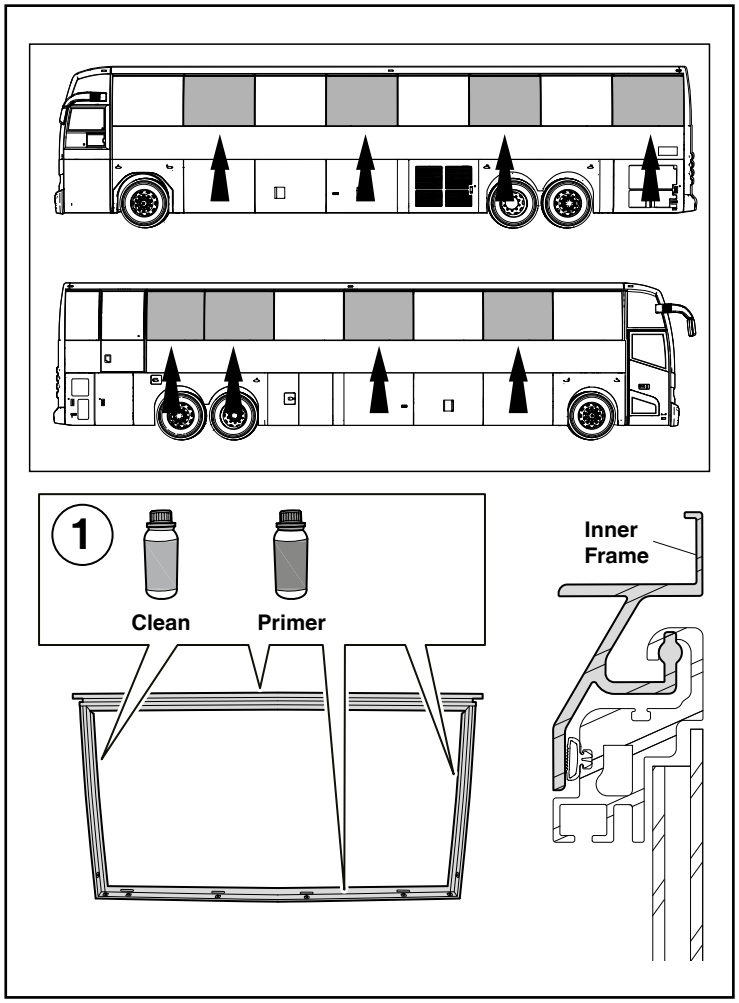

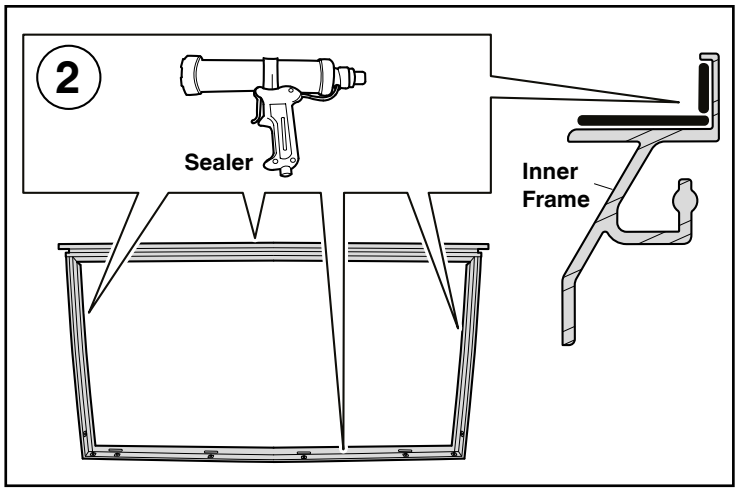

4.4.1 INSTALLATION OF EMERGENCY WINDOW

1. Clean the window frame and area on bus where window will be fitted. Apply primer to the surfaces that are to be sealed.
2. Apply sealer to surface that are to be sealed. Mount the inner frame.

CAUTION

Primer (Terostat 8550 solution) is applied onto body and glass for easy attachment of sealer.

CAUTION

After applying the primer let it dry then apply adhesive material. Adhesive process should take no longer than 30 minutes. Always work in a well ventilated area.

CAUTION

Use masking tape to prevent contact of adhesive to bodywork. Clean adhesive quickly with activator when infected.

4.4.1 INSTALLATION OF EMERGENCY WINDOW

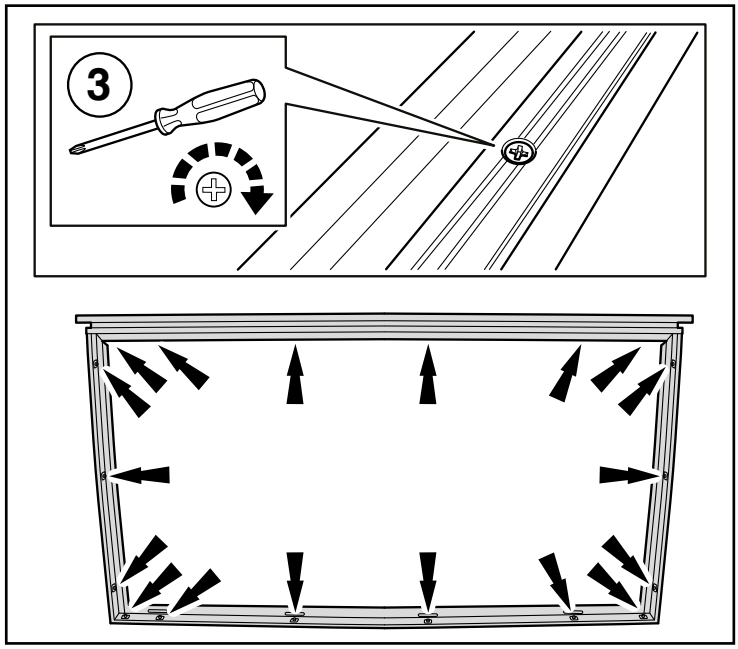

3. Screw the inner frame to the body from all 4 sides.

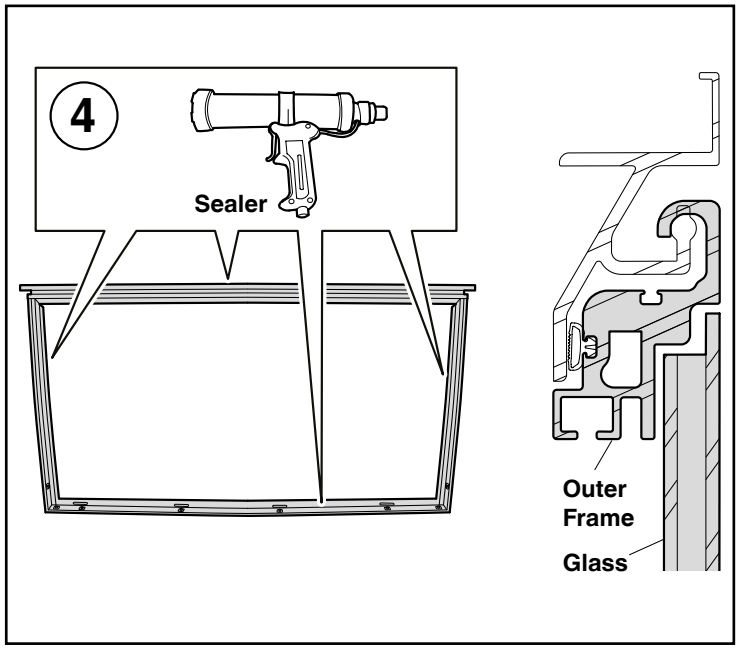

4. Mount the window frame to the inner frame using sealer.

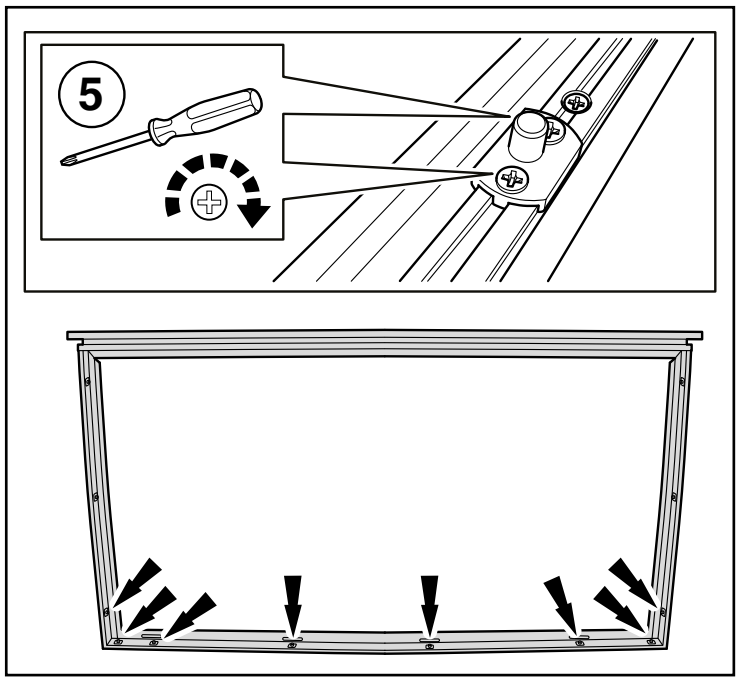

5. Mount the hinge cover bracket with seal.

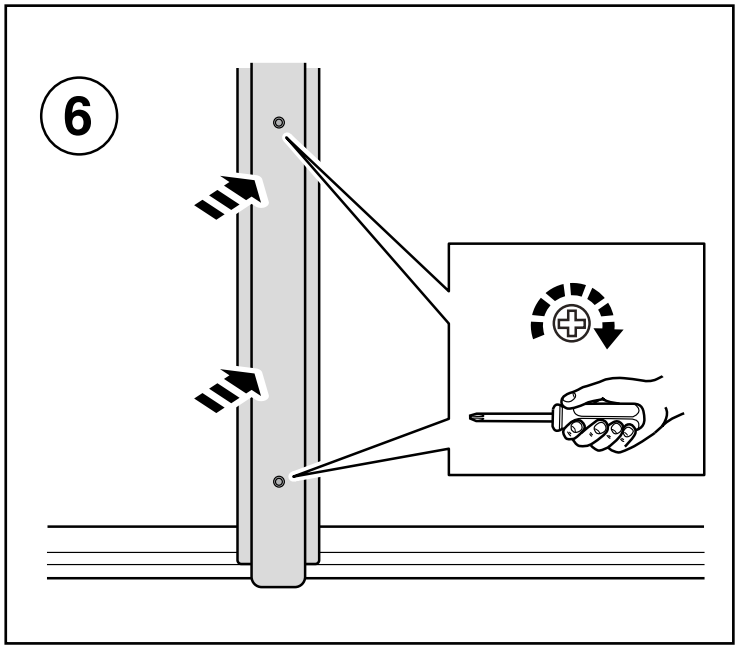

4.4.1 INSTALLATION OF EMERGENCY WINDOW

6. Mount the inner trim and fix with 2 screws.

4.5. REMOVING OF FIXED WINDOW

1. Remove the rear view mirror.

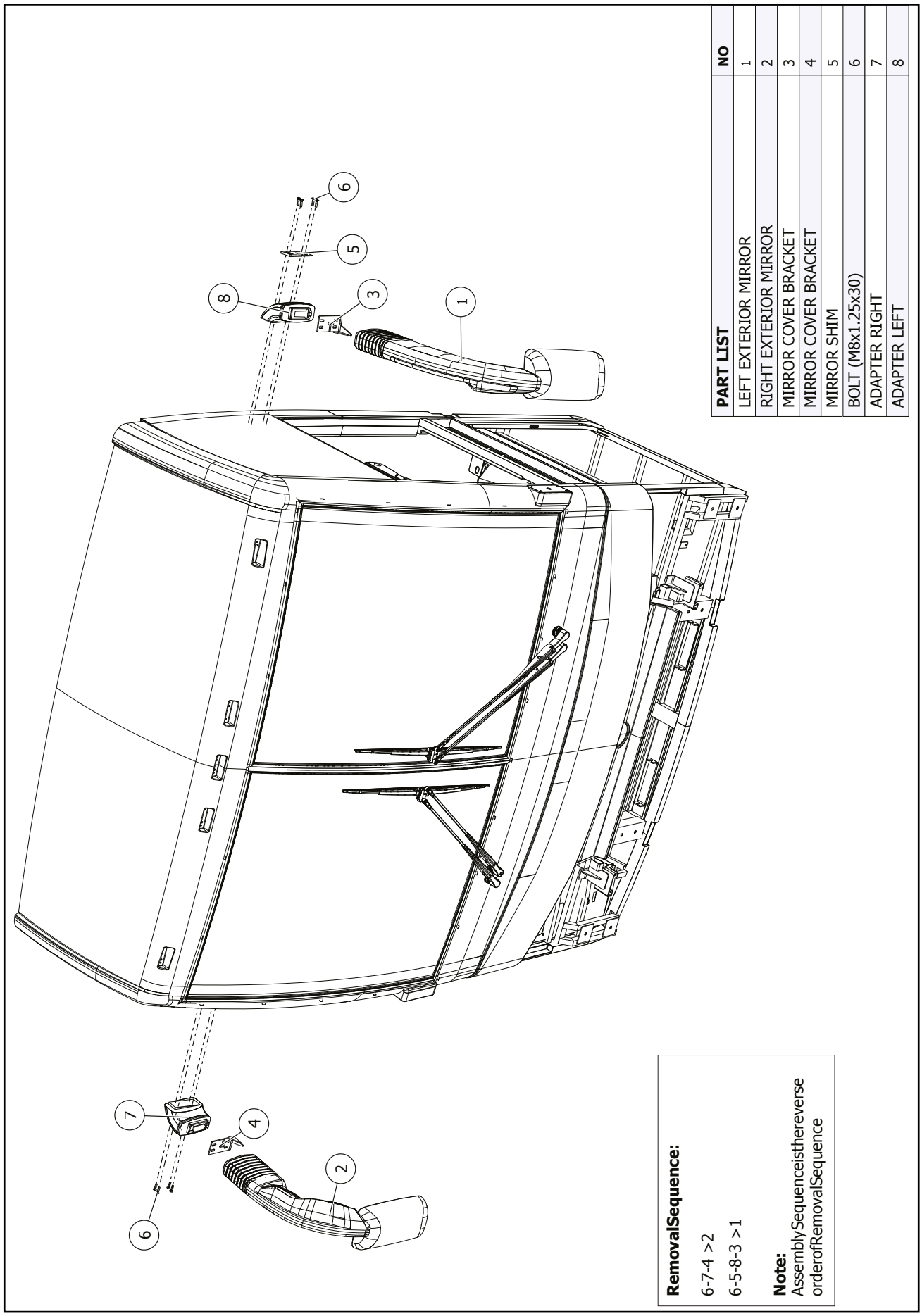

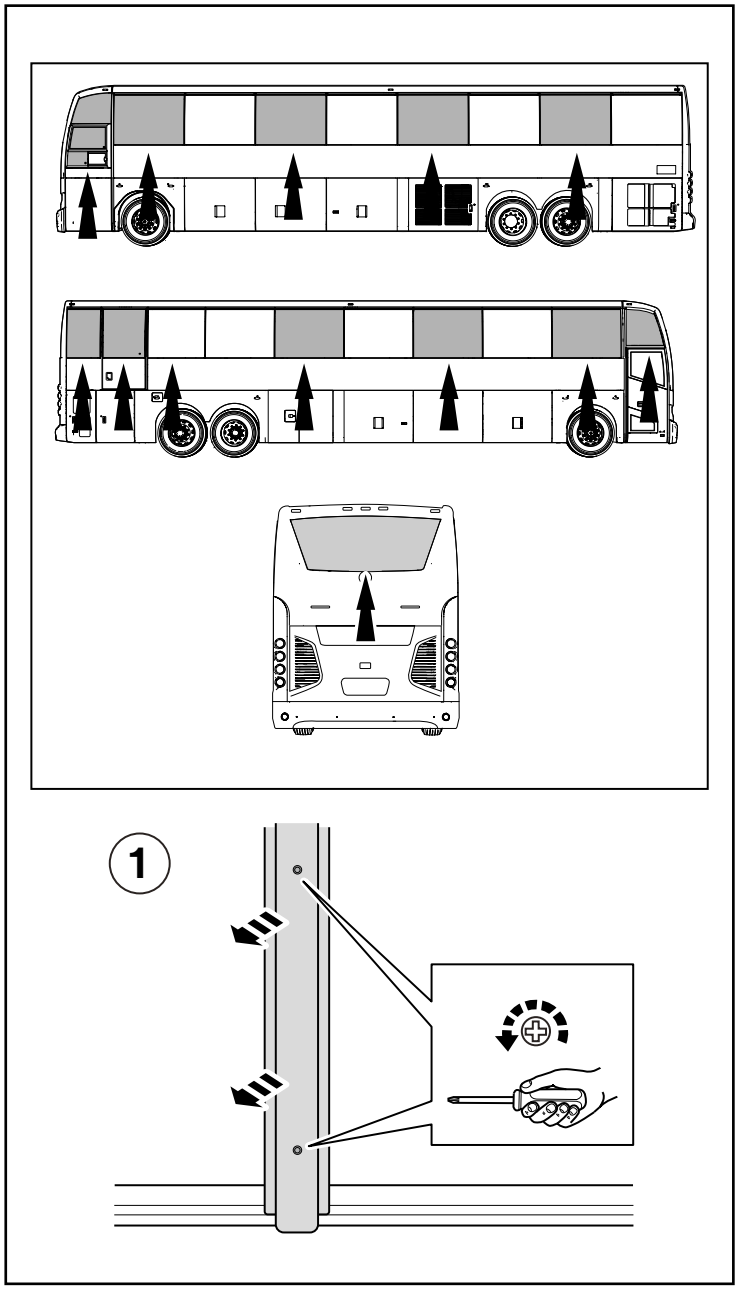

4.5. REMOVING OF FIXED WINDOW

1. Remove the inner trim parts around window by loosening the 2 screws.

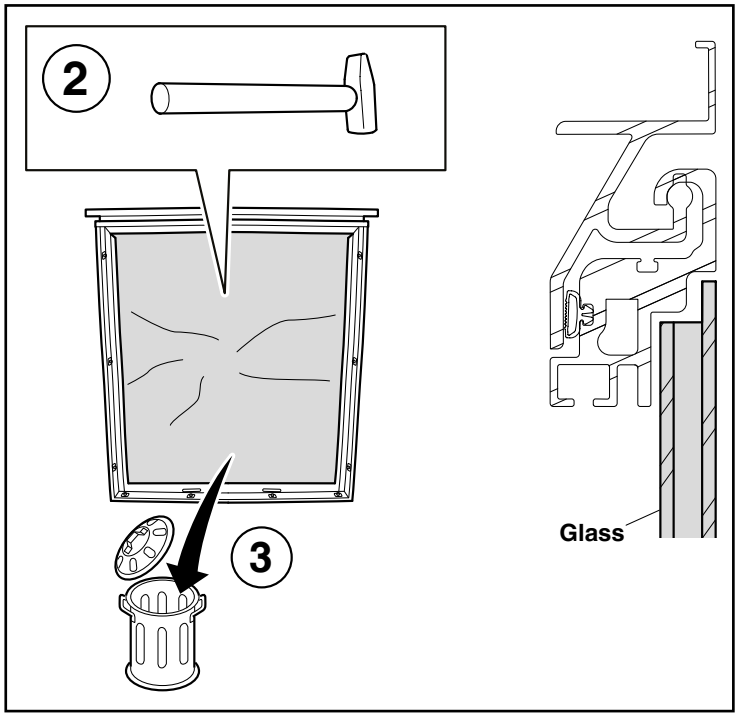

2. Brake the window and clean the frames.
3. Throw away window.

4.5. REMOVING OF FIXED WINDOW

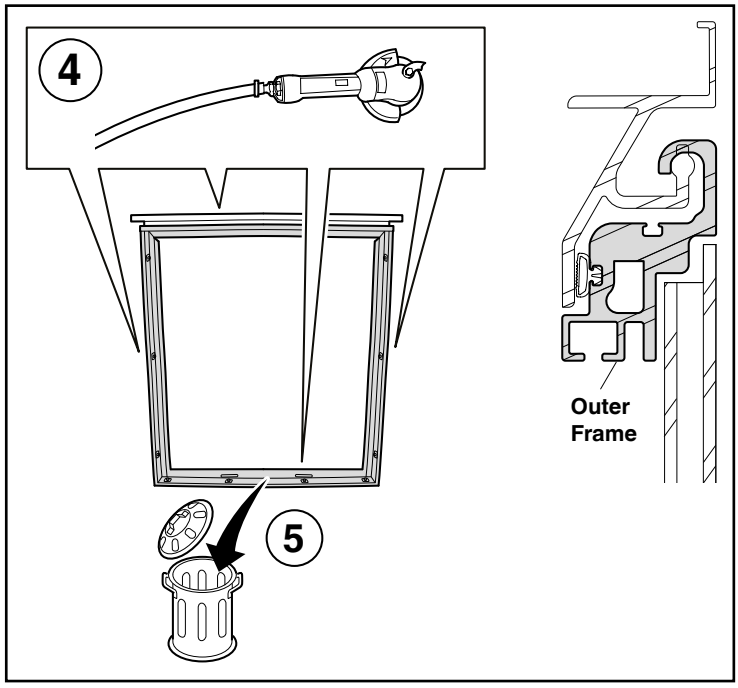

4. Using a grinder to cut the frame out from where it is sealed.
5. Throw away outer frame.

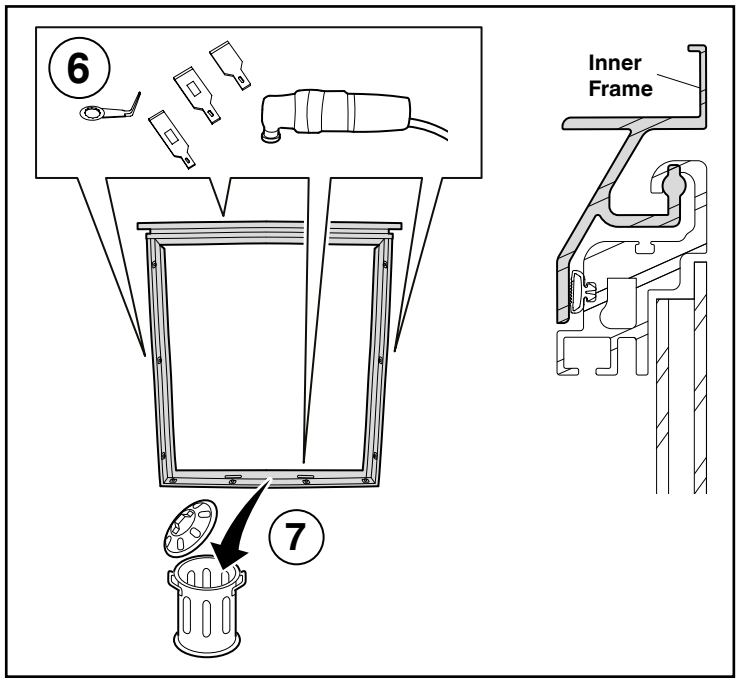

6. Using a grinder cut the inner frame which is on the body where it is sealed.
7. Throw away inner frame.

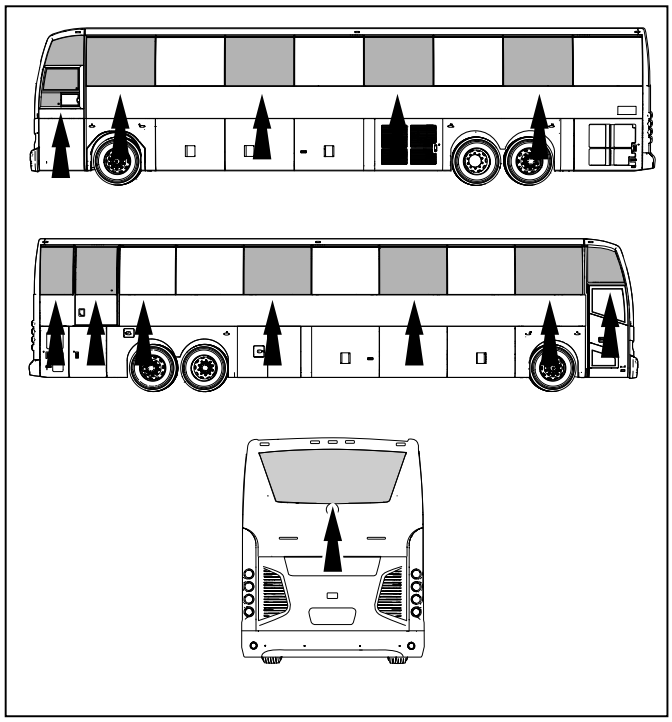

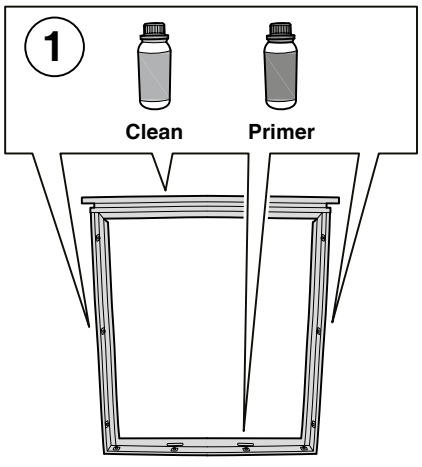

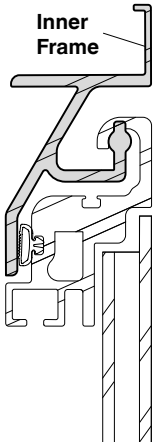

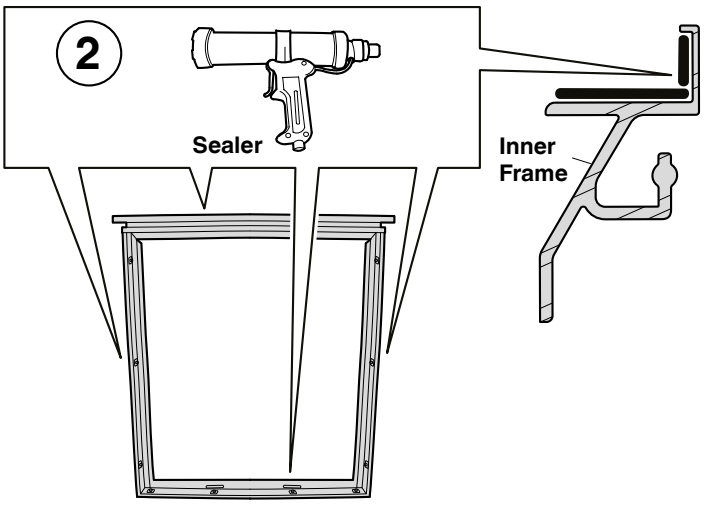

4.5.1 INSTALLATION OF FIXED WINDOW

1. Clean the window frame and area on bus where window will be fitted. Apply primer to the surfaces that are to be sealed.
2. Apply sealer to surfaces that are to be sealed. Mount the inner frame.

CAUTION

Primer (Terostat 8550 solution) is applied onto body and glass for easy attachment of sealer.

CAUTION

After applying the primer let it dry then apply adhesive material. Adhesive process should take no longer than 30 minutes. Always work in a well ventilated area.

CAUTION

Use masking tape to prevent contact of adhesive to bodywork. Clean adhesive quickly with activator when infected.

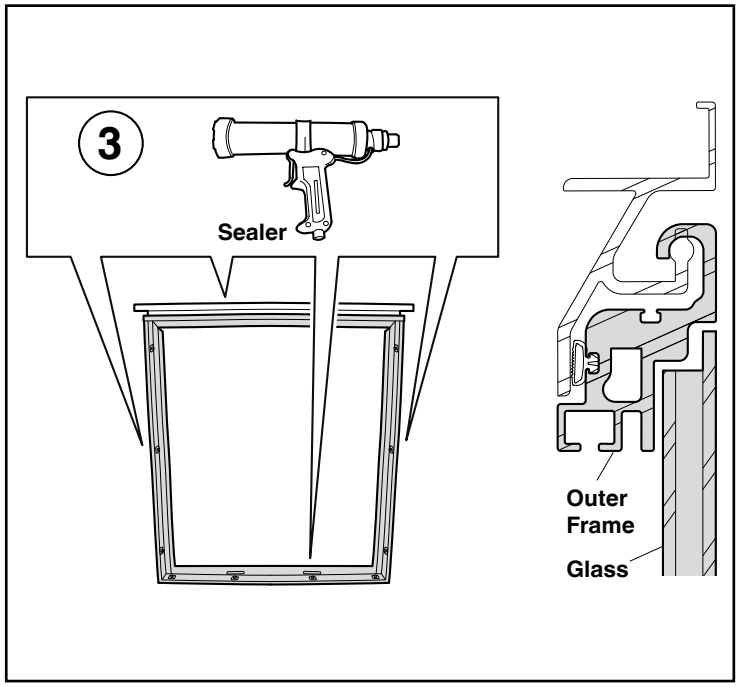

4.5.1 INSTALLATION OF FIXED WINDOW

3. Mount the window frame to the inner frame using sealer.

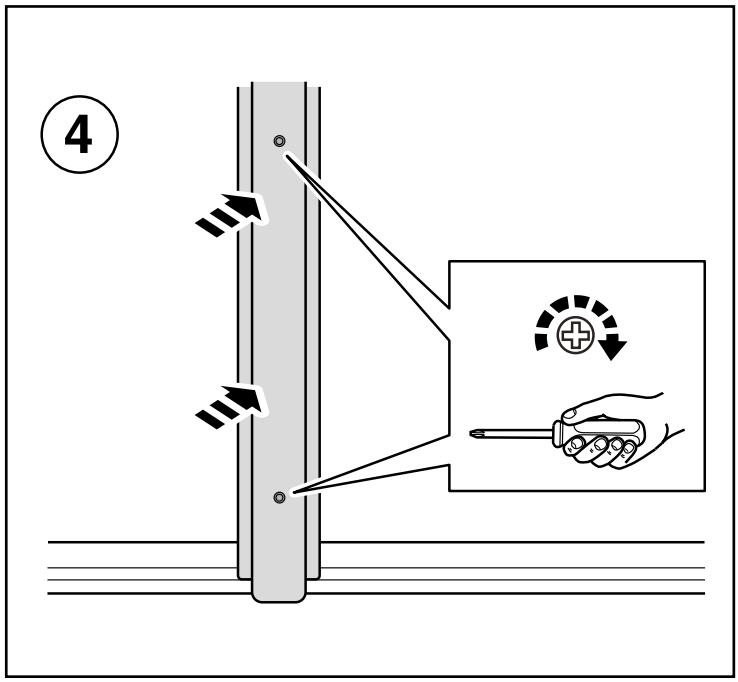

4. Mount the inner trim and fix with 2 screws.

22 DOORS AND LIDS

Rev.00 / 25.03.14

1. TOOLS 2

2. STRUCTURE AND OPERATION 3

2.1. Exploded View of Front Door 3

2.2. Exploded View of LIFT Door 4

2.3. Exploded View of Luggage Lids 12

2.4. Exploded View of Fender Lids 13

2.5. Exploded View of Rear Lid 15

3. ON VEHICLE ADJUSTMENT AND INSPECTION 16

3.1. Door Adjustment 16

3.2. Emergency Squeezing Prevention System Adjustment 18

3.3. Final Door Closing and Opening Brake Adjustment 18

3.4. Main Door Closing and Opening Speed Adjustment 19

3.5. Lid Adjustment 19

4. SERVICE PROCEDURE 21

4.1. Removal and Installation of Door 21

GENERAL

- If work is performed by people who do not have the necessary training to carry out the work or if this information is handled carelessly or totally ignored, this may result in severe injury and/or death. Inaddition, serious damage to the vehicle may occur.
- Always read the safety instructions in full before starting certain operations. The safety instructions stipulate which aspects must be considered to achieve maximum safety. The information is given that is very important for health and safety.
- Always work in adequately ventilated rooms with sufficient lighting, free from dirt and clutter. Never leave tools or parts lying around, keep away from (high-) voltage sources that present a risk of short-circuiting. Always wear protective clothing. Do not wear any damaged or loose-fitting clothing and remove jewelry before starting the work. In case of long hair use hairnet.

1. TOOLS

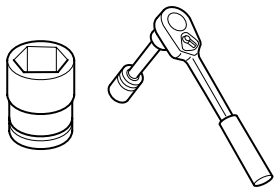 Impact Socket	 Sonic	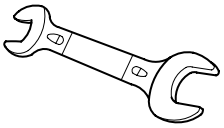 Open Wrench Double Ended
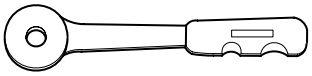 Drive Tools	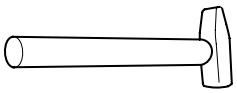 Hammer	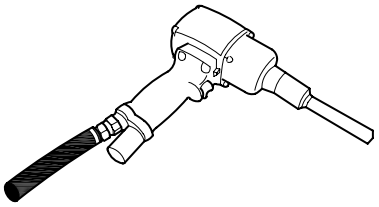 Drill
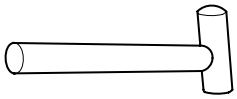 Plastic Hammer	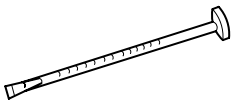 Chisel	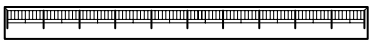 Steel Ruler
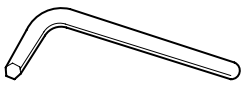 Hexagonal Keys 5	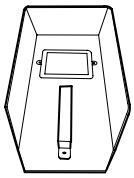 Welding Mask	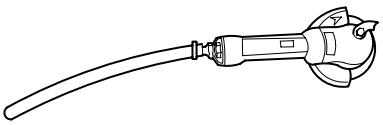 Grinders
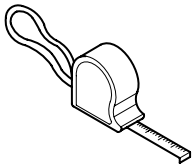 Meter	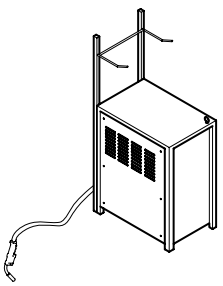 Mig Welding Machine	

2. STRUCTURE AND OPERATION

2.1. EXPLODED VIEW OF FRONT DOOR

Removal Sequence :

20 > 19
15 - 16 - 17 > 18
36 - 37 > 35 > 30
21 - 22 - 24 - 23 > 14
25 - 26 - 27 > 15 >14
28 - 30 - 31 - 31 - 32 - 33 - 34 > 29 > 13
9 - 10 - 11 > 8
40 - 41 - 42 - 43 - 44 - 46 > 45
47 - 48 - 49 - 51 > 50
39 - 38 - 7 - 5 - 6 - 2 - 3 - 4 - 12 > 1

Note:
Installation sequence is reverse of removal sequence

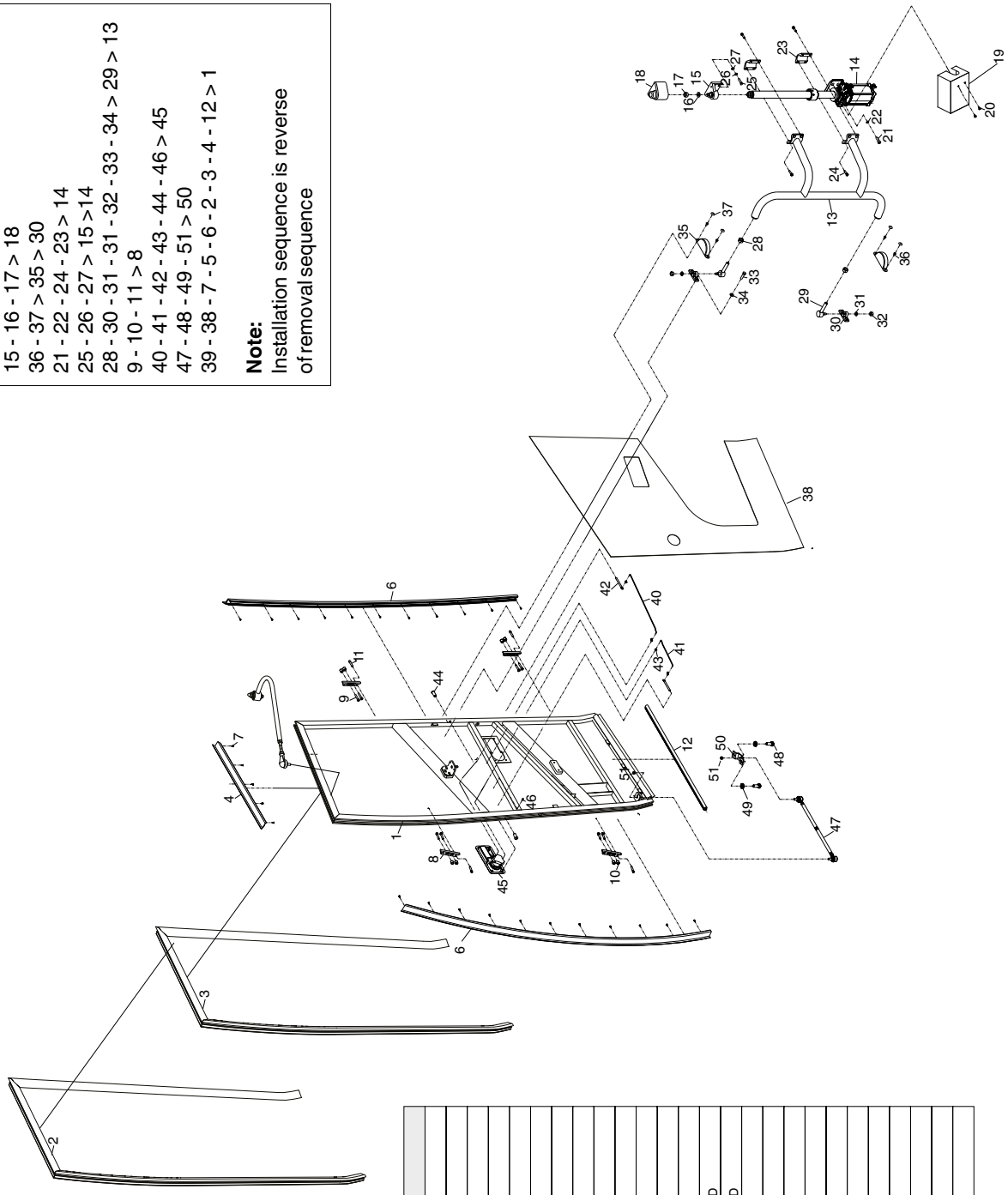

No	PART LIST	No	PART LIST
1.	FRONT DOOR CARCASS	27.	WASHER PLAIN
2.	FRONT BODY WEATHER STRIP	28.	NUT
3.	ABOVE OF BODY WEATHER STRIP	29.	ROD END
4.	DOOR UPPER, PLATE EDGE	30.	BRACKET
5.	DOOR FRONT, PLATE EDGE	31.	WASHER PLAIN
6.	DOOR REAR, PLATE	32.	NUT
7.	SCREW TAPPING (4X16)	33.	BOLT
8.	DOOR CONTROL PIN	34.	WASHER PLAIN
9.	ALLEN BOLT (M8X1.25X40)	35.	COVER
10.	BUSHING	36.	SCREW MACHINE
11.	STRIKE SCREW ASSY.	37.	SCREW CAP
12.	WEATHER STRIP	38.	COVER
13.	DOOR ENGINE ARM	39.	COVER
14.	DOOR ENGINE	40.	CONNECTION ROD
15.	UPPER CONNECTION BRACKET	41.	CONNECTION ROD
16.	WASHER PLAIN	42.	DOOR LOCK MIL
17.	NUT	43.	ROD CLIP
18.	COVER	44.	BUSHING
19.	COVER	45.	STRIKE ASSY.
20.	SCREW	46.	SCREW
21.	ALLEN BOLT	47.	GUIDE ARM
22.	WASHER PLAIN	48.	BOLT
23.	BRACKET	49.	WASHER PLAIN
24.	ALLEN BOLT	50.	BRACKET
25.	BOLT	51.	NUT
26.	WASHER PLAIN		

2.2. EXPLODED VIEW OF LIFT DOOR

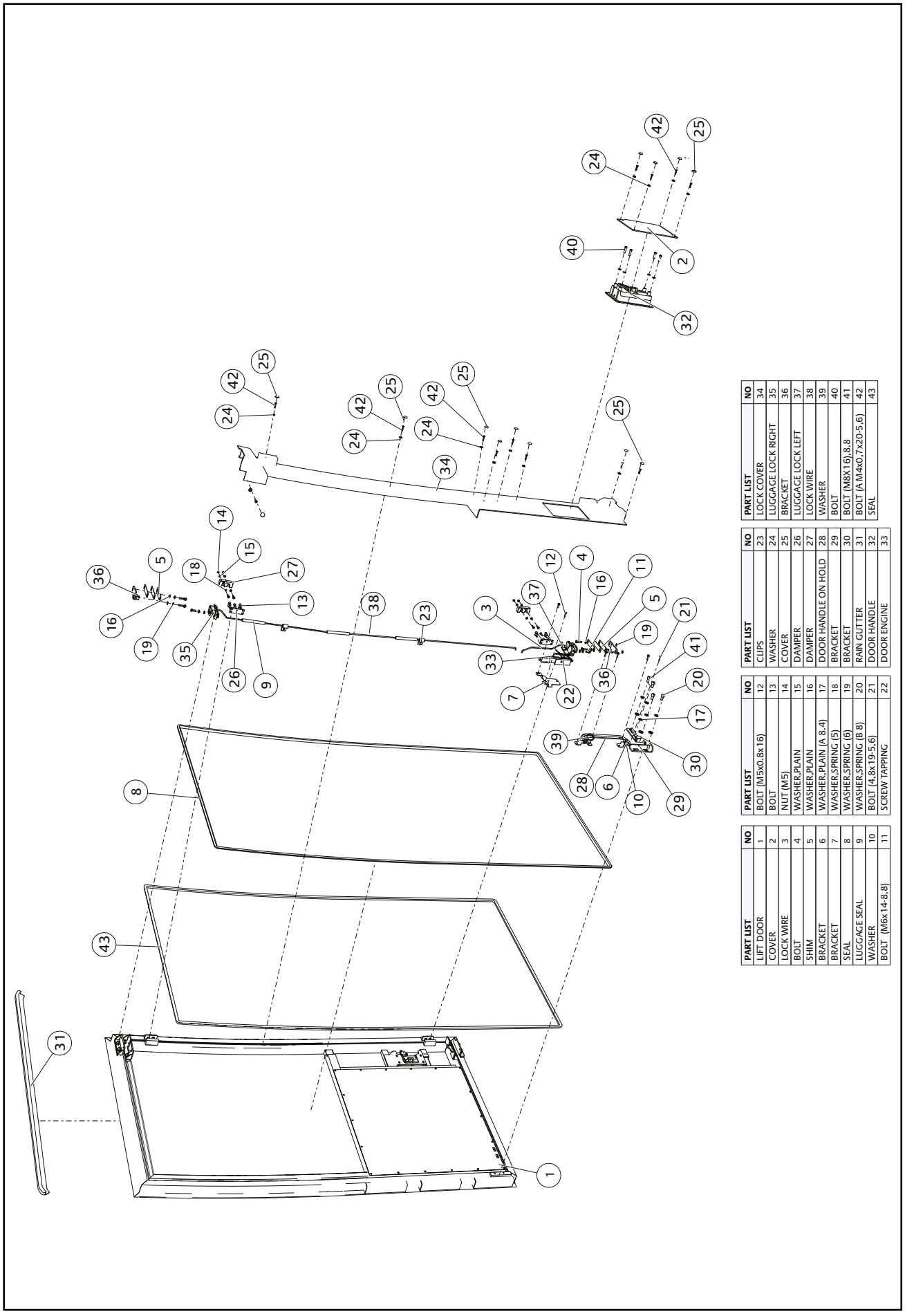

NO	PART LIST
1	LIFT DOOR
2	COVER
3	LOCK WIRE
4	BOLT
5	SHIM
6	BRACKET
7	BRACKET
8	SEAL
9	LUGGAGE SEAL
10	WASHER
11	BOLT (M6x14-8.8)

NO	PART LIST
12	BOLT (M5x0.8x16)
13	BOLT
14	NUT (M5)
15	WASHER,PLAIN
16	WASHER,PLAIN
17	WASHER,PLAIN (A 8.4)
18	WASHER,SPRING (5)
19	WASHER,SPRING (6)
20	WASHER,SPRING (B 8)
21	BOLT (4.8x19-5.6)
22	SCREW TAPPING

NO	PART LIST
23	CLIPS
24	WASHER
25	COVER
26	DAMPER
27	DAMPER
28	DOOR HANDLE ON HOLD
29	BRACKET
30	BRACKET
31	RAIN GUTTER
32	DOOR HANDLE
33	DOOR ENGINE

NO	PART LIST
34	LOCK COVER
35	LUGGAGE LOCK RIGHT
36	BRACKET
37	LUGGAGE LOCK LEFT
38	LOCK WIRE
39	WASHER
40	BOLT
41	BOLT (M8X16),8.8
42	BOLT (A M4x0.7x20-5.6)
43	SEAL

2.2. EXPLODED VIEW OF SIDE LIDS

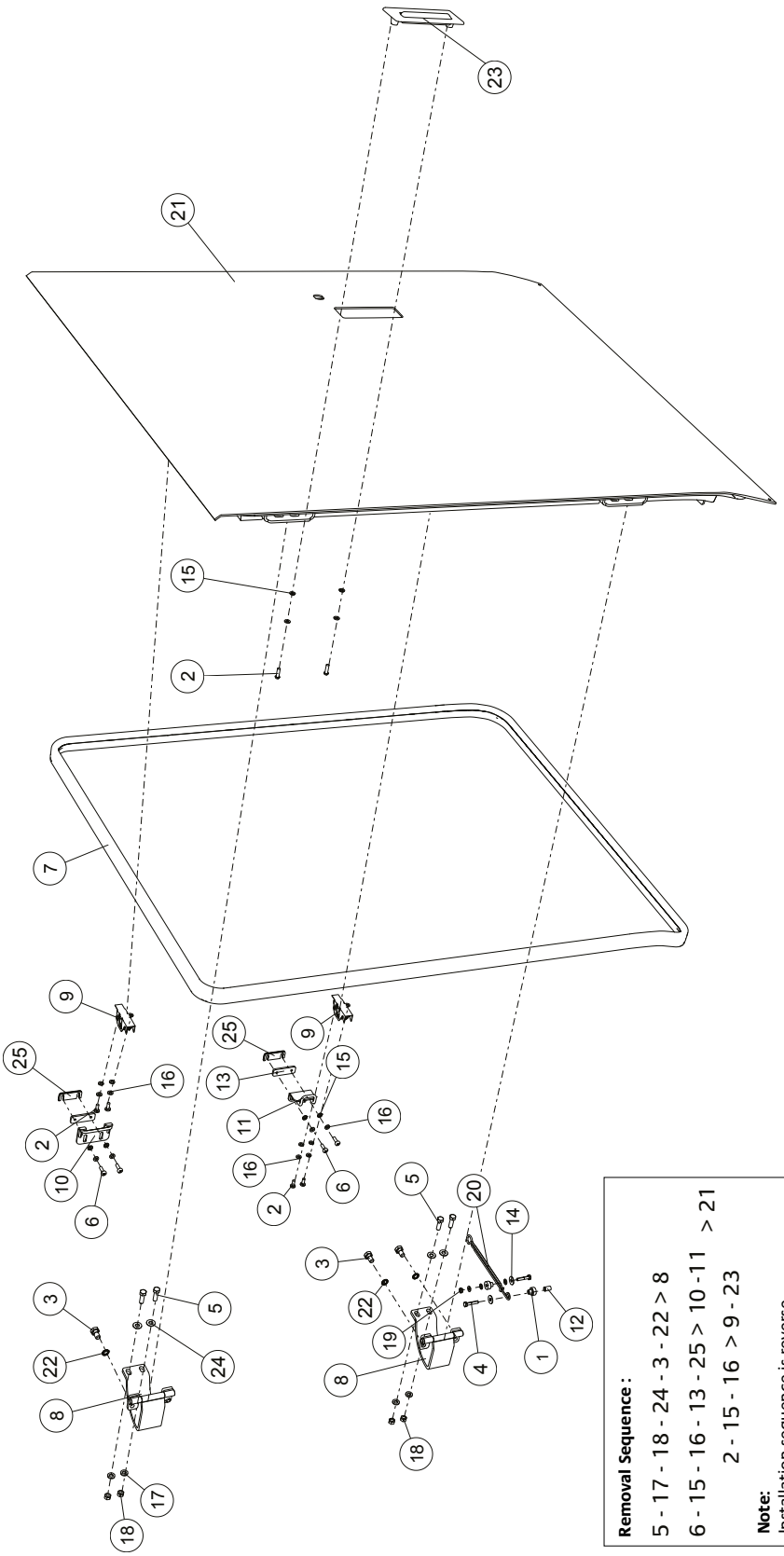

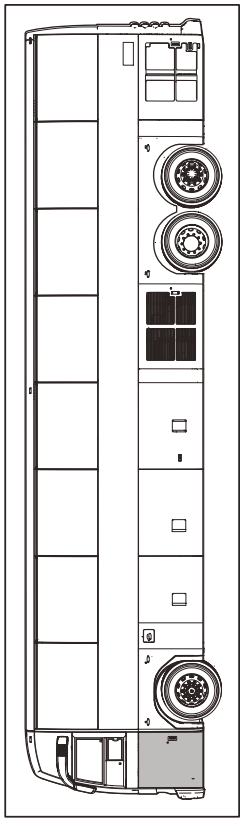

Removal Sequence :

5 - 17 - 18 - 24 - 3 - 22 > 8

6 - 15 - 16 - 13 - 25 > 10 -11 > 21

2 - 15 - 16 > 9 - 23

Note:
Installation sequence is reverse of removal sequence

NO	PART LIST
1	BUSHING
2	BOLT
3	BOLT (M10x1.25x16)
4	BOLT (M6x1x30-5,6)
5	BOLT (M8x25)
6	BOLT (M6x20)
7	ROVING
8	HINGE
9	LOCK
10	LOCK STRIKER
11	LOCK STRIKER
12	NUT (WURTH-91726)
13	PLATE

NO	PART LIST
14	WASHER (A-6,4 GSD)
15	WASHER,PLAIN
16	WASHER,SPRING (6)
17	WASHER,SPRING (B 8)
18	NUT (M8X1.25)
19	NUT (M6x1x-4,8)
20	COVER RETANIER
21	SIDE LID
22	WASHER (ø10)
23	HANDLE
24	WASHER,PLAIN (A 8.4)
25	SHIM

2.2. EXPLODED VIEW OF SIDE LIDS

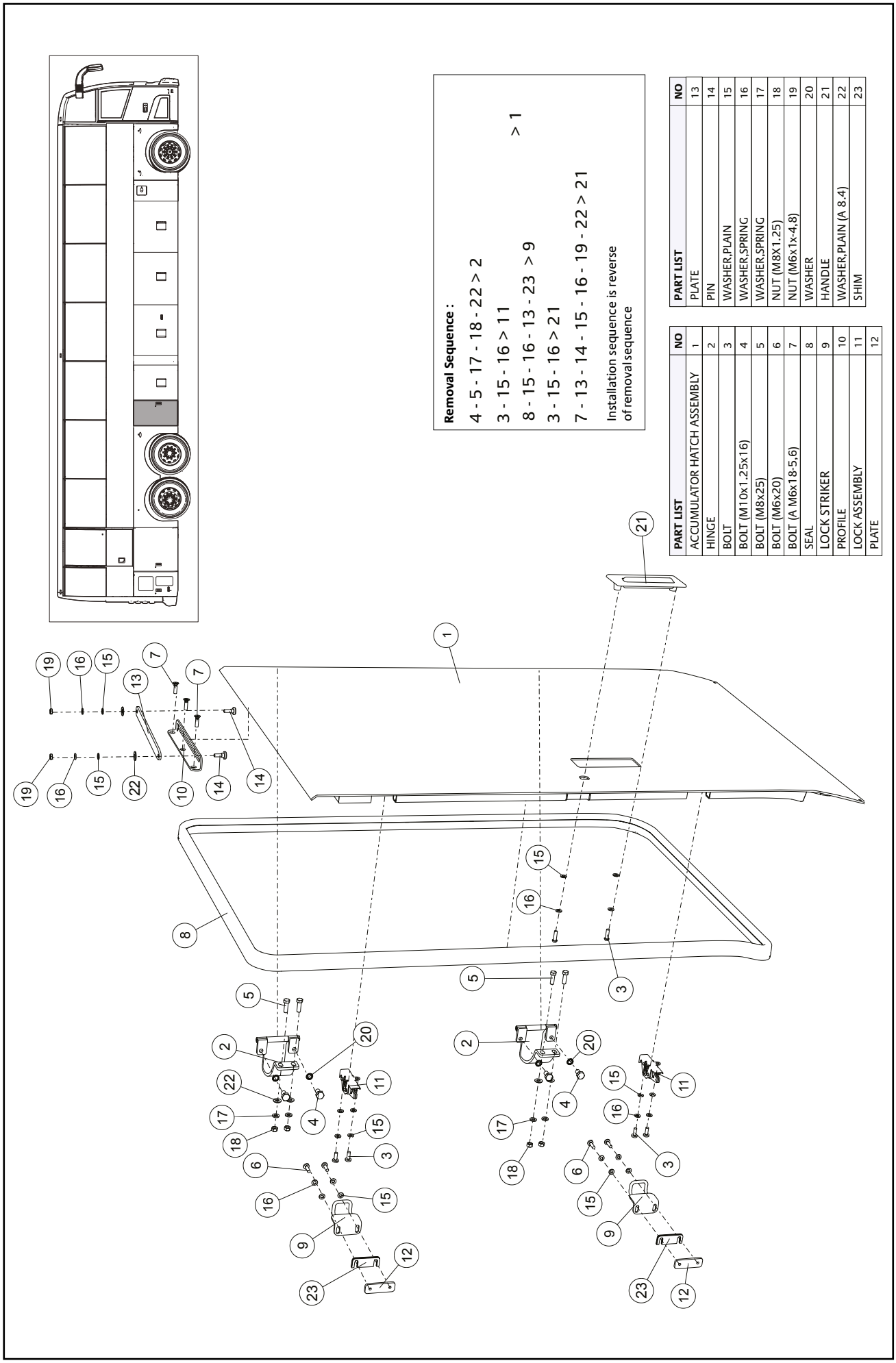

PART LIST	NO
ACCUMULATOR HATCH ASSEMBLY	1
HINGE	2
BOLT	3
BOLT (M10x1.25x16)	4
BOLT (M8x25)	5
BOLT (M6x20)	6
BOLT (A M6x18-5,6)	7
SEAL	8
LOCK STRIKER	9
PROFILE	10
LOCK ASSEMBLY	11
PLATE	12

PART LIST	NO
PLATE	13
PIN	14
WASHER,PLAIN	15
WASHER,SPRING	16
WASHER,SPRING	17
NUT (M8X1.25)	18
NUT (M6x1x-4.8)	19
WASHER	20
HANDLE	21
WASHER,PLAIN (A 8.4)	22
SHIM	23

2.2. EXPLODED VIEW OF SIDE LIDS

Removal Sequence :

7 - 22 - 20 - 26 - 5 - 24 > 2

4 - 18 - 19 - 13 > 12 > 1

8 - 14 - 17 - 10 > 9

4 - 18 - 19 > 25

Installation sequence is reverse of removal sequence

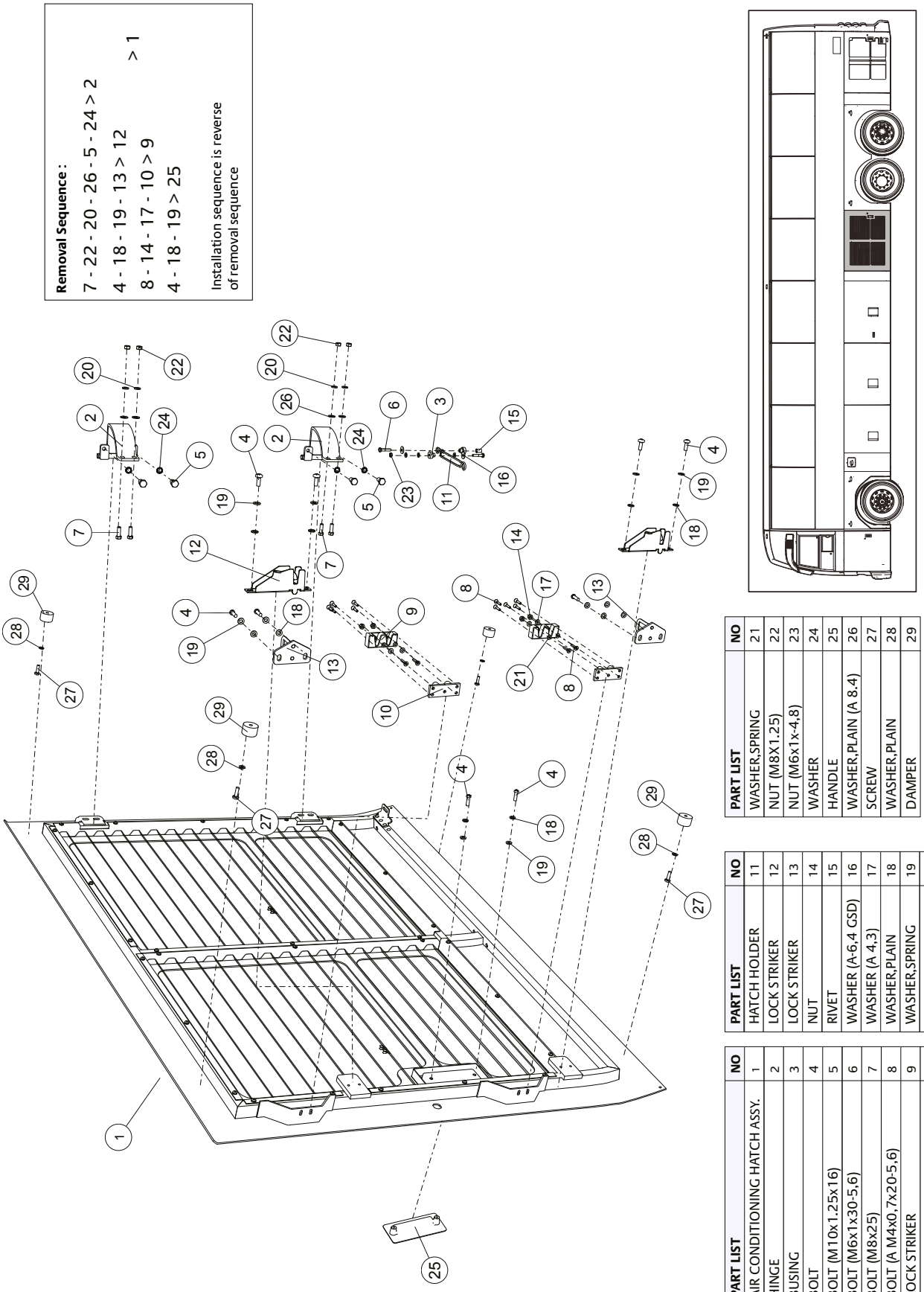

NO	PART LIST
1	AIR CONDITIONING HATCH ASSY.
2	HINGE
3	BUSING
4	BOLT
5	BOLT (M10x1.25x16)
6	BOLT (M6x1x30-5,6)
7	BOLT (M8x25)
8	BOLT (A M4x0,7x20-5,6)
9	LOCK STRIKER
10	LOCK STRIKER

NO	PART LIST
11	HATCH HOLDER
12	LOCK STRIKER
13	LOCK STRIKER
14	NUT
15	RIVET
16	WASHER (A-6,4 GSD)
17	WASHER (A 4,3)
18	WASHER,PLAIN
19	WASHER,SPRING
20	WASHER,SPRING

NO	PART LIST
21	WASHER,SPRING
22	NUT (M8X1.25)
23	NUT (M6x1x-4,8)
24	WASHER
25	HANDLE
26	WASHER,PLAIN (A 8.4)
27	SCREW
28	WASHER,PLAIN
29	DAMPER

2.2. EXPLODED VIEW OF SIDE LIDS

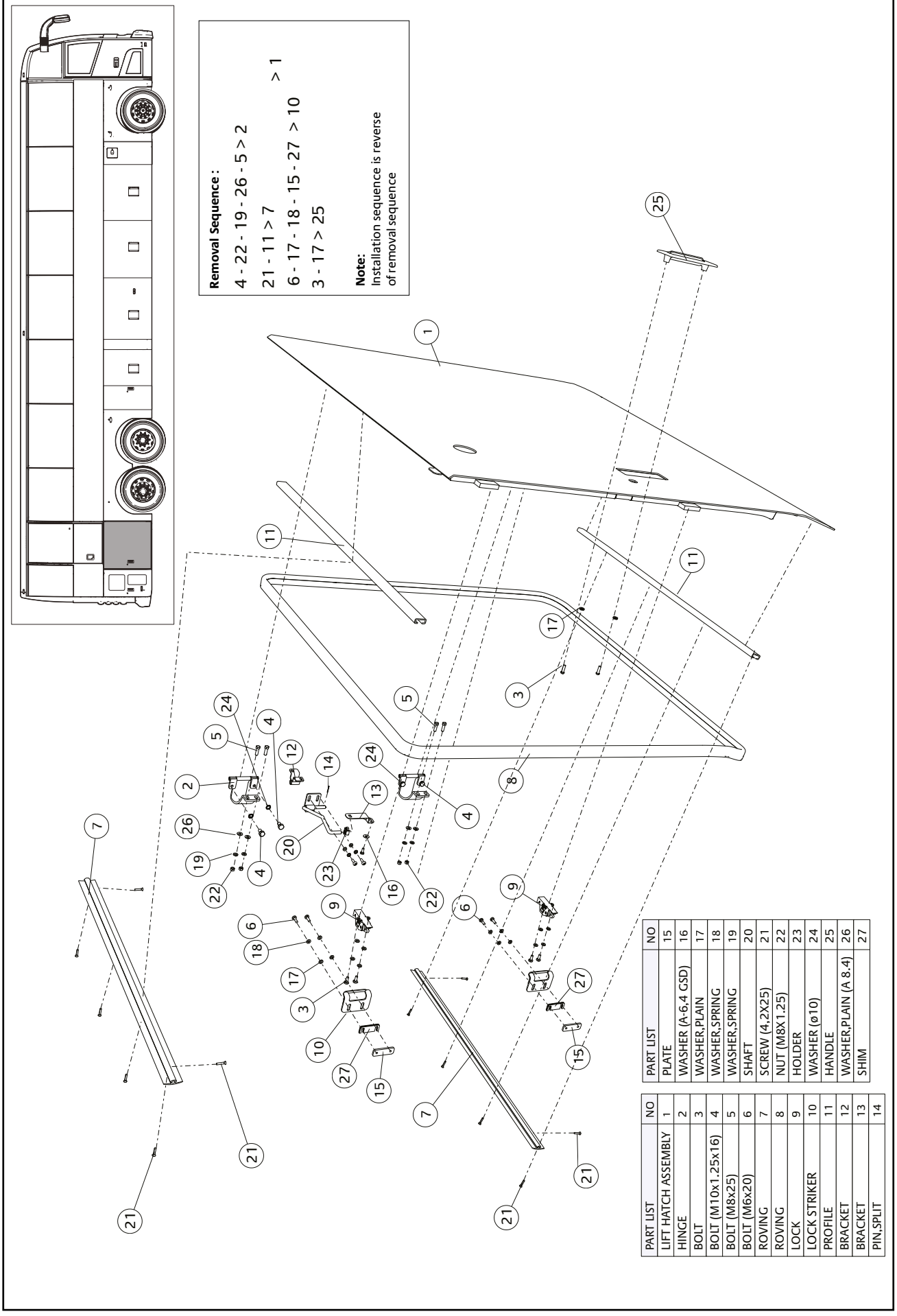

PART LIST	NO
LIFT HATCH ASSEMBLY	1
HINGE	2
BOLT	3
BOLT (M10x1.25x16)	4
BOLT (M8x25)	5
BOLT (M6x20)	6
ROVING	7
ROVING	8
LOCK	9
LOCK STRIKER	10
PROFILE	11
BRACKET	12
BRACKET	13
PIN,SPLIT	14

PART LIST	NO
PLATE	15
WASHER (A-6,4 GSD)	16
WASHER,PLAIN	17
WASHER,SPRING	18
WASHER,SPRING	19
SHAFT	20
SCREW (4,2X25)	21
NUT (M8X1.25)	22
HOLDER	23
WASHER (ø10)	24
HANDLE	25
WASHER,PLAIN (A 8.4)	26
SHIM	27

2.2. EXPLODED VIEW OF SIDE LIDS

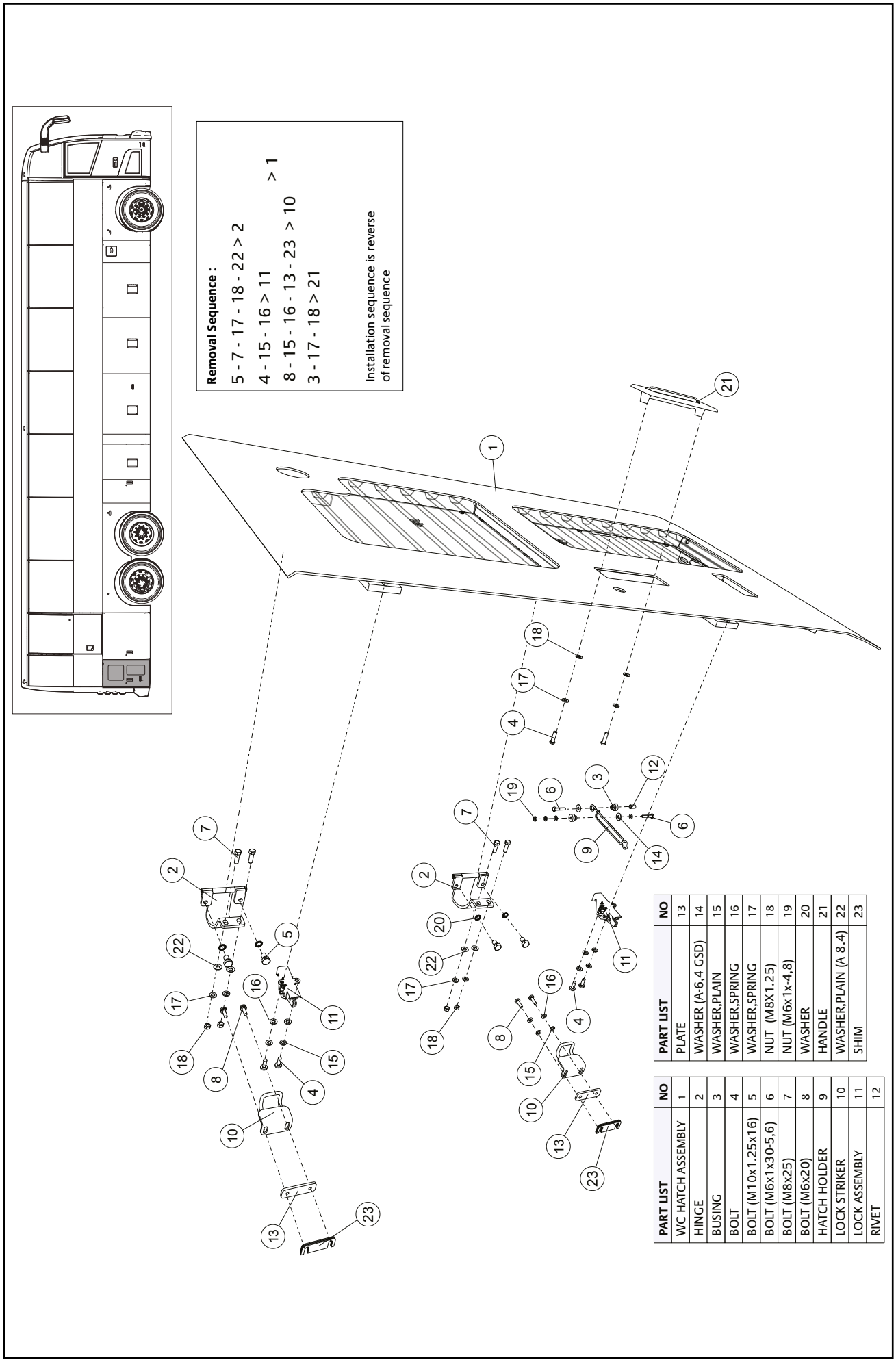

PART LIST	NO
WC HATCH ASSEMBLY	1
HINGE	2
BUSING	3
BOLT	4
BOLT (M10x1.25x16)	5
BOLT (M6x1x30-5,6)	6
BOLT (M8x25)	7
BOLT (M6x20)	8
HATCH HOLDER	9
LOCK STRIKER	10
LOCK ASSEMBLY	11
RIVET	12

PART LIST	NO
PLATE	13
WASHER (A-6,4 GSD)	14
WASHER,PLAIN	15
WASHER,SPRING	16
WASHER,SPRING	17
NUT (M8X1.25)	18
NUT (M6x1x-4,8)	19
WASHER	20
HANDLE	21
WASHER,PLAIN (A 8.4)	22
SHIM	23

2.2. EXPLODED VIEW OF SIDE LIDS

Removal Sequence :

7 - 22 - 20 - 26 - 5 - 24 > 2

4 - 18 - 19 - 13 > 12 > 1

8 - 14 - 17 - 10 > 9

4 - 18 - 19 > 25

Installation sequence is reverse of removal sequence

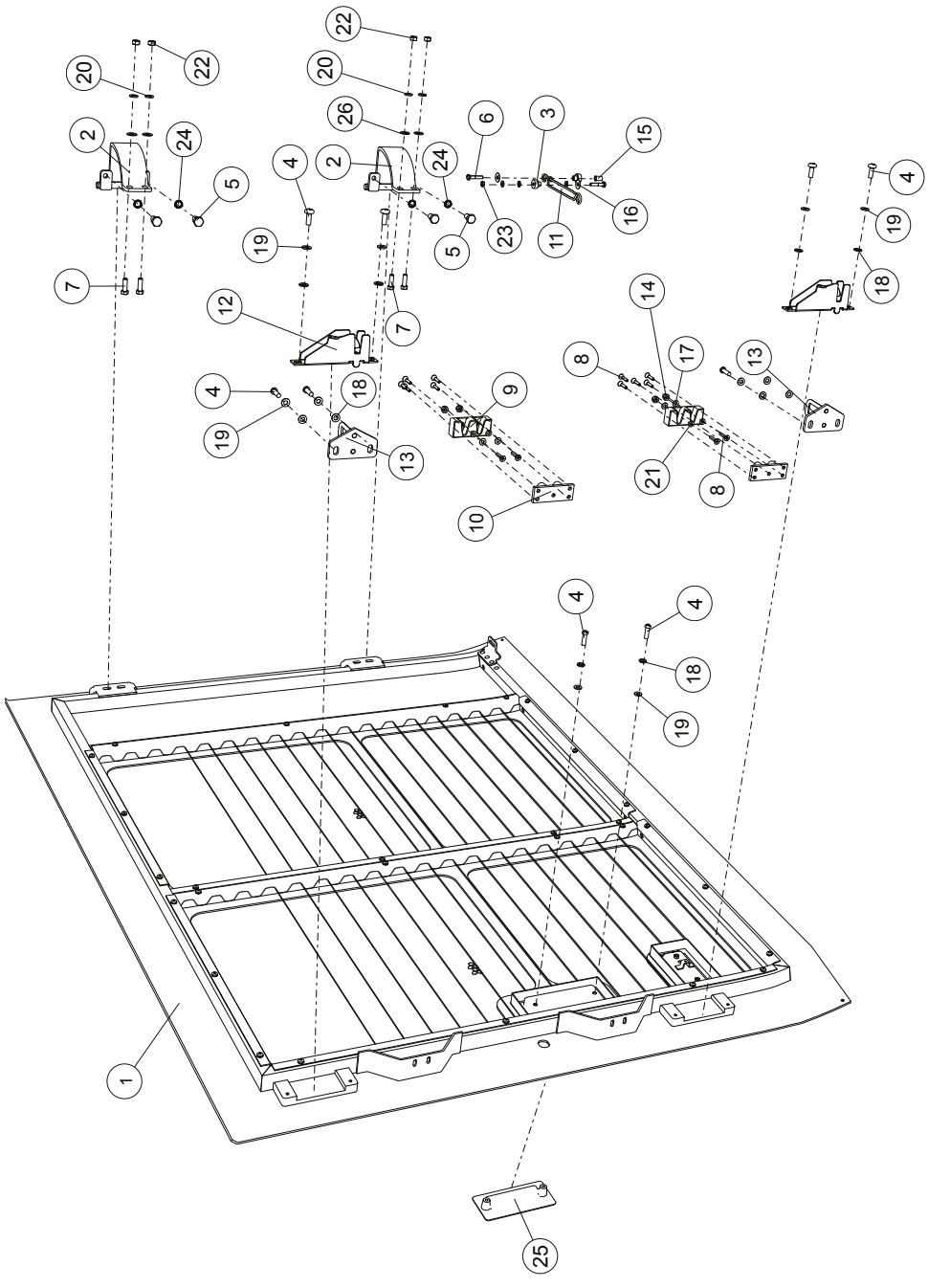

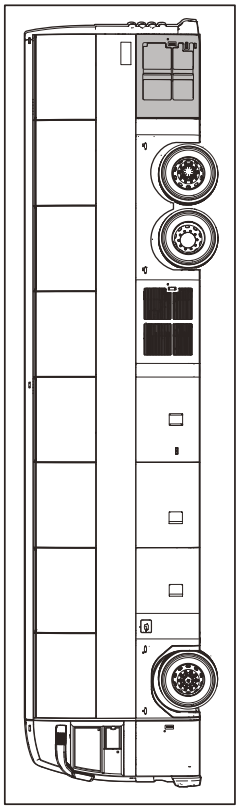

NO	PART LIST
1	RADIATOR HATCH ASSEMBLY
2	HINGE
3	BUSING
4	BOLT
5	BOLT (M10x1.25x16)
6	BOLT (M6x1x30-5,6)
7	BOLT (M8x25)
8	BOLT (A M4x0,7x20-5,6)
9	LOCK STRIKER

NO	PART LIST
10	LOCK STRIKER
11	HATCH HOLDER
12	LOCK STRIKER
13	LOCK STRIKER
14	NUT
15	RIVET
16	WASHER (A-6,4 GSD)
17	WASHER (A 4,3)
18	WASHER,PLAIN

NO	PART LIST
19	WASHER,SPRING
20	WASHER,SPRING
21	WASHER,SPRING
22	NUT (M8X1.25)
23	NUT (M6x1x4,8)
24	WASHER
25	HANDLE
26	WASHER,PLAIN (A 8.4)

2.2. EXPLODED VIEW OF SIDE LIDS

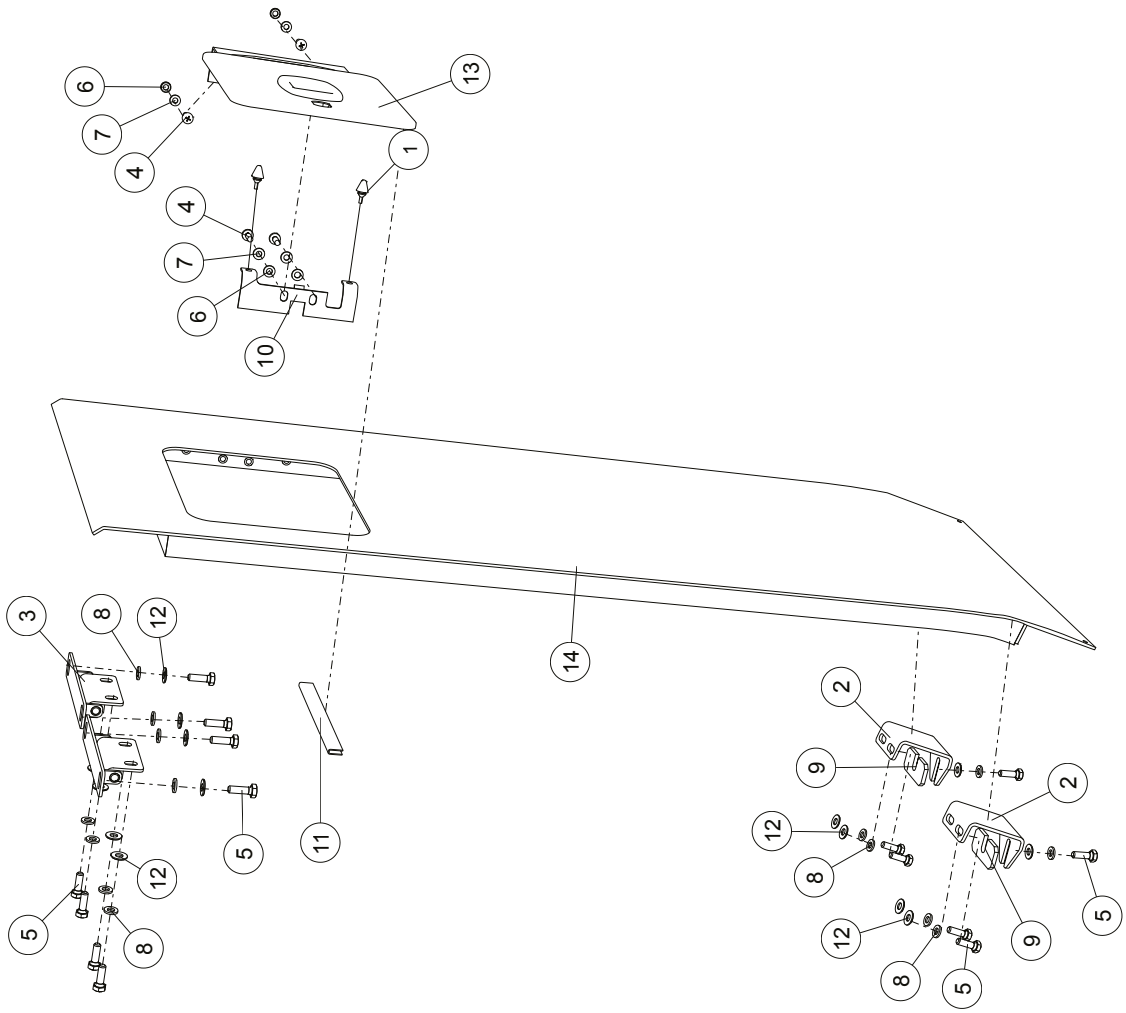

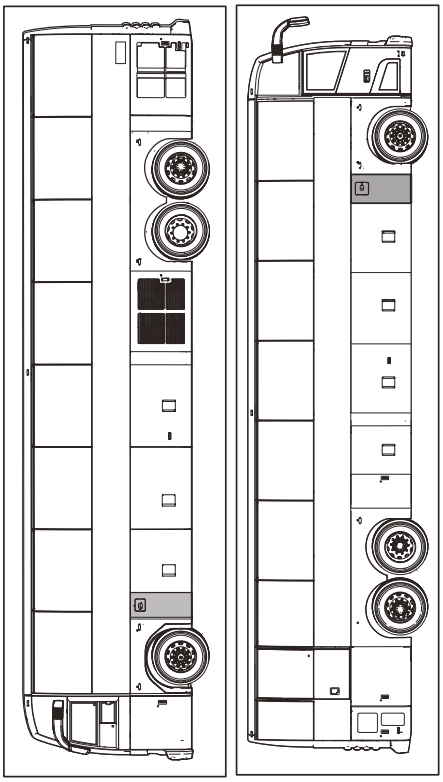

Removal Sequence :

5 - 8 - 12 - 9 > 2 - 3 > 14

4 - 6 - 7 - 1 - 10 > 13

Note:
Installation sequence is reverse of removal sequence

PART LIST	NO
BOLT	1
BRACKET	2
BRACKET	3
BOLT	4
BOLT (M8x1,25x25-5,6)	5
WASHER,PLAIN	6
WASHER,SPRING	7
WASHER,SPRING	8
SHIM	9
STOPPER	10
U PROFILE	11
WASHER,PLAIN (A 8.4)	12
FUEL TANK CAP	13
FUEL TANK HATCH ASSEMBLY	14

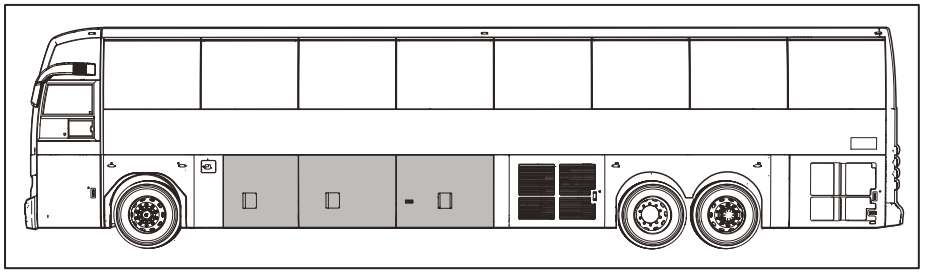

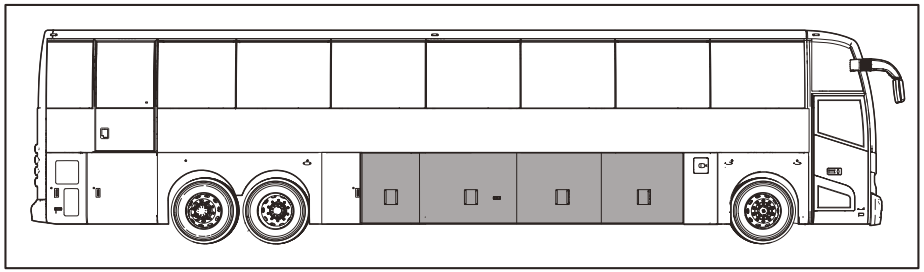

Removal Sequence :

37 - 38 - 39 > 3
8 - 7 - 5 > 6
16 - 18 > 17
20 - 21 > 19
34 - 33 - 10 - 12 - 11 - 8 - 28 - 29 - 30 > 32
36 - 35 - 31 - 26 - 27 - 22 - 25 > 24
1 - 15 - 14 - 13 - 23 - 4 > 2

Note:

Installation sequence is reverse of removal sequence

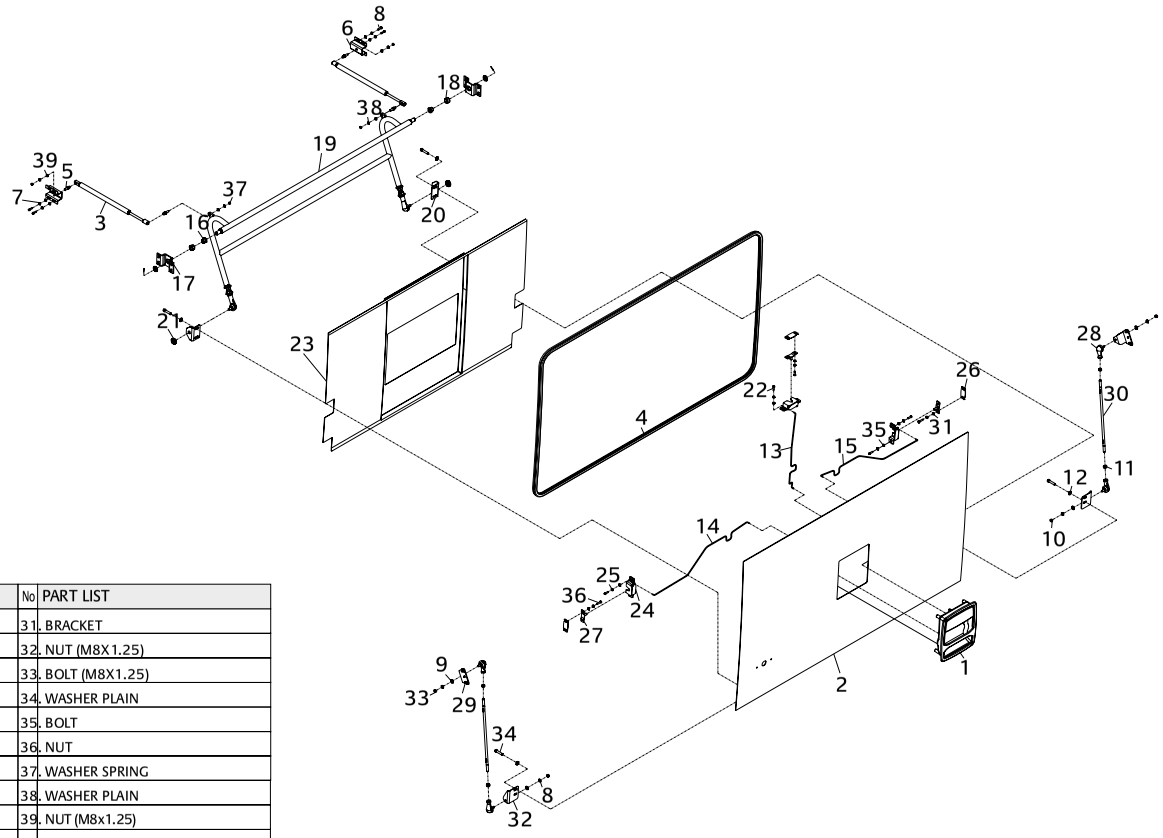

No	PART LIST	No	PART LIST	No	PART LIST	No	PART LIST
1.	HANDLE	11.	NUT (M10)	21.	BUSHING	31.	BRACKET
2.	PANEL	12.	WASHER PLAIN	22.	SCREW (M16X5)	32.	NUT (M8X1.25)
3.	SHOCK ABSORBER	13.	LOCK MIL	23.	COVER	33.	BOLT (M8X1.25)
4.	WEATHER STRIP	14.	LOCK MIL	24.	BRACKET	34.	WASHER PLAIN
5.	CONNECTOR	15.	LOCK MIL	25.	WASHER SPRING	35.	BOLT
6.	SHOCK ABSORBER BRACKET	16.	BEARING	26.	SHIM	36.	NUT
7.	WASHER SPRING	17.	BRACKET	27.	STRIKE ASSY.	37.	WASHER SPRING
8.	SCREW	18.	BUSHING	28.	BRACKET	38.	WASHER PLAIN
9.	LOCK MIL	19.	ARM ASSY. HINGE	29.	ROD	39.	NUT (M8x1.25)
10.	NUT	20.	ARM ASSY.BRACKET	30.	WASHER PLAIN		

2.4. EXPLODED VIEW OF FENDER LIDS

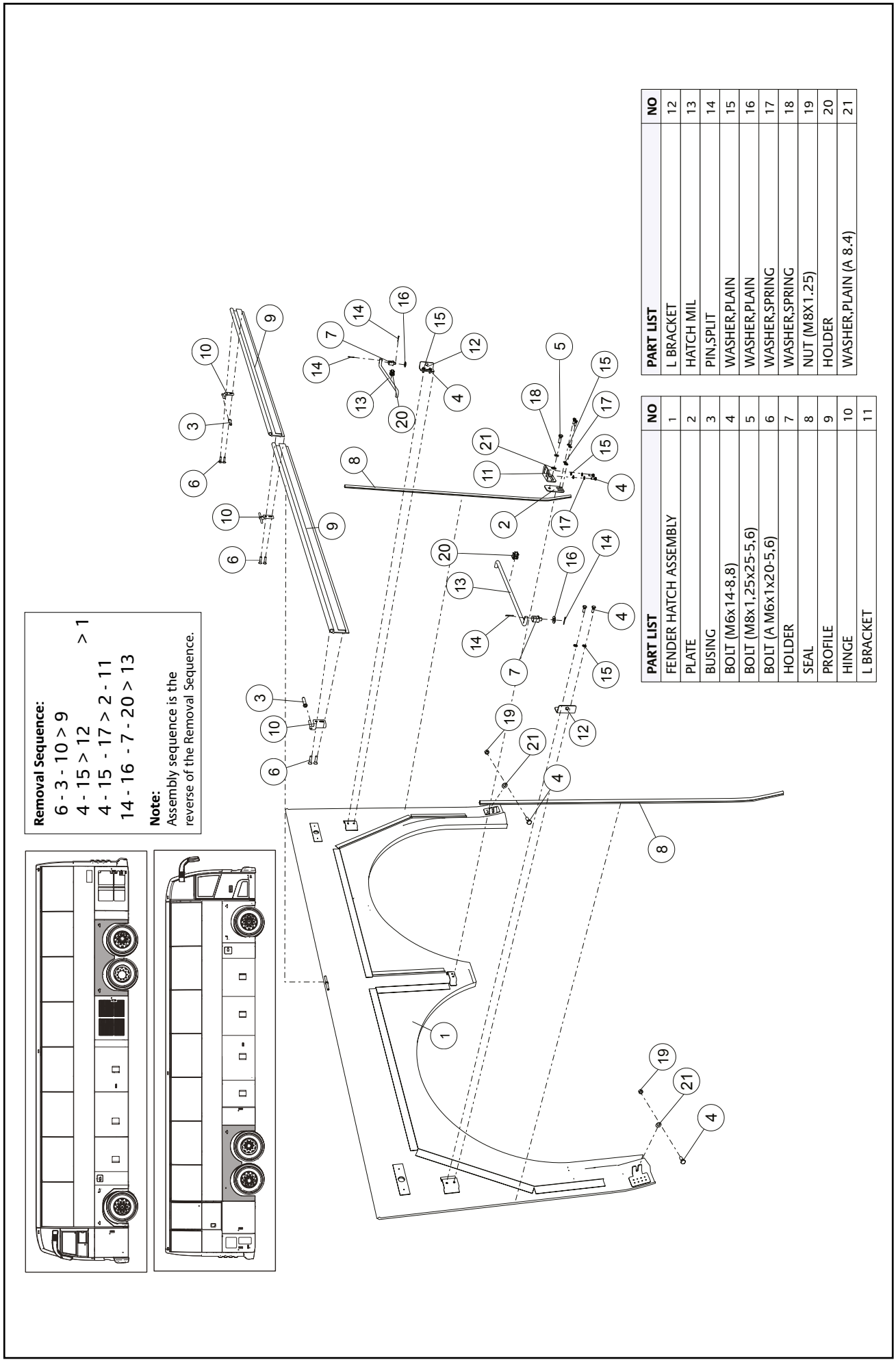

PART LIST	NO
FENDER HATCH ASSEMBLY	1
PLATE	2
BUSING	3
BOLT (M6x14-8.8)	4
BOLT (M8x1,25x25-5,6)	5
BOLT (A M6x1x20-5,6)	6
HOLDER	7
SEAL	8
PROFILE	9
HINGE	10
L BRACKET	11

PART LIST	NO
L BRACKET	12
HATCH MIL	13
PIN,SPLIT	14
WASHER,PLAIN	15
WASHER,PLAIN	16
WASHER,SPRING	17
WASHER,SPRING	18
NUT (M8X1.25)	19
HOLDER	20
WASHER,PLAIN (A 8.4)	21

2.4. EXPLODED VIEW OF FENDER LIDS

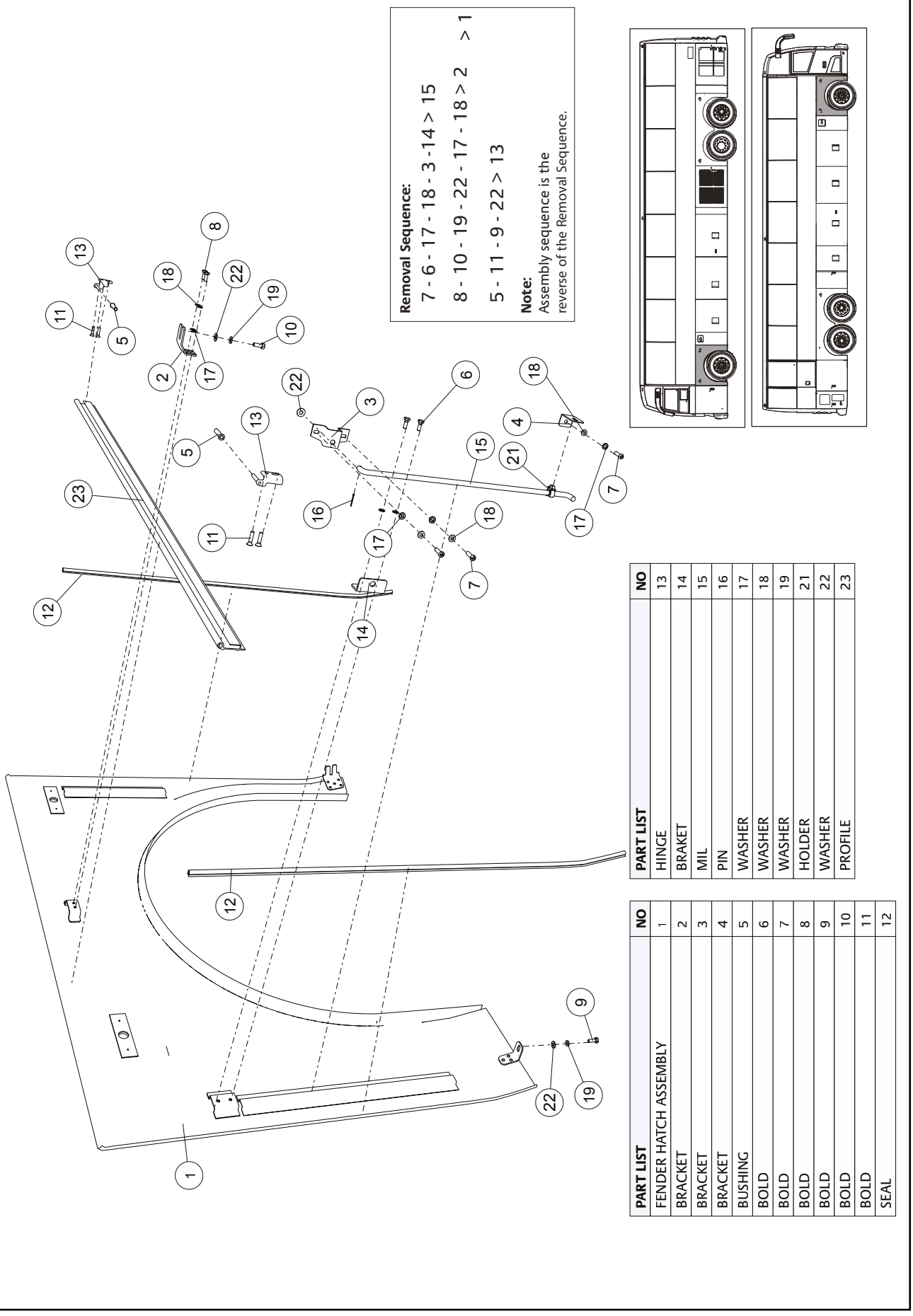

NO	PART LIST
1	FENDER HATCH ASSEMBLY
2	BRACKET
3	BRACKET
4	BRACKET
5	BUSHING
6	BOLD
7	BOLD
8	BOLD
9	BOLD
10	BOLD
11	BOLD
12	SEAL

NO	PART LIST
13	HINGE
14	BRAKET
15	MIL
16	PIN
17	WASHER
18	WASHER
19	WASHER
21	HOLDER
22	WASHER
23	PROFILE

2.5. EXPLODED VIEW OF REAR LID

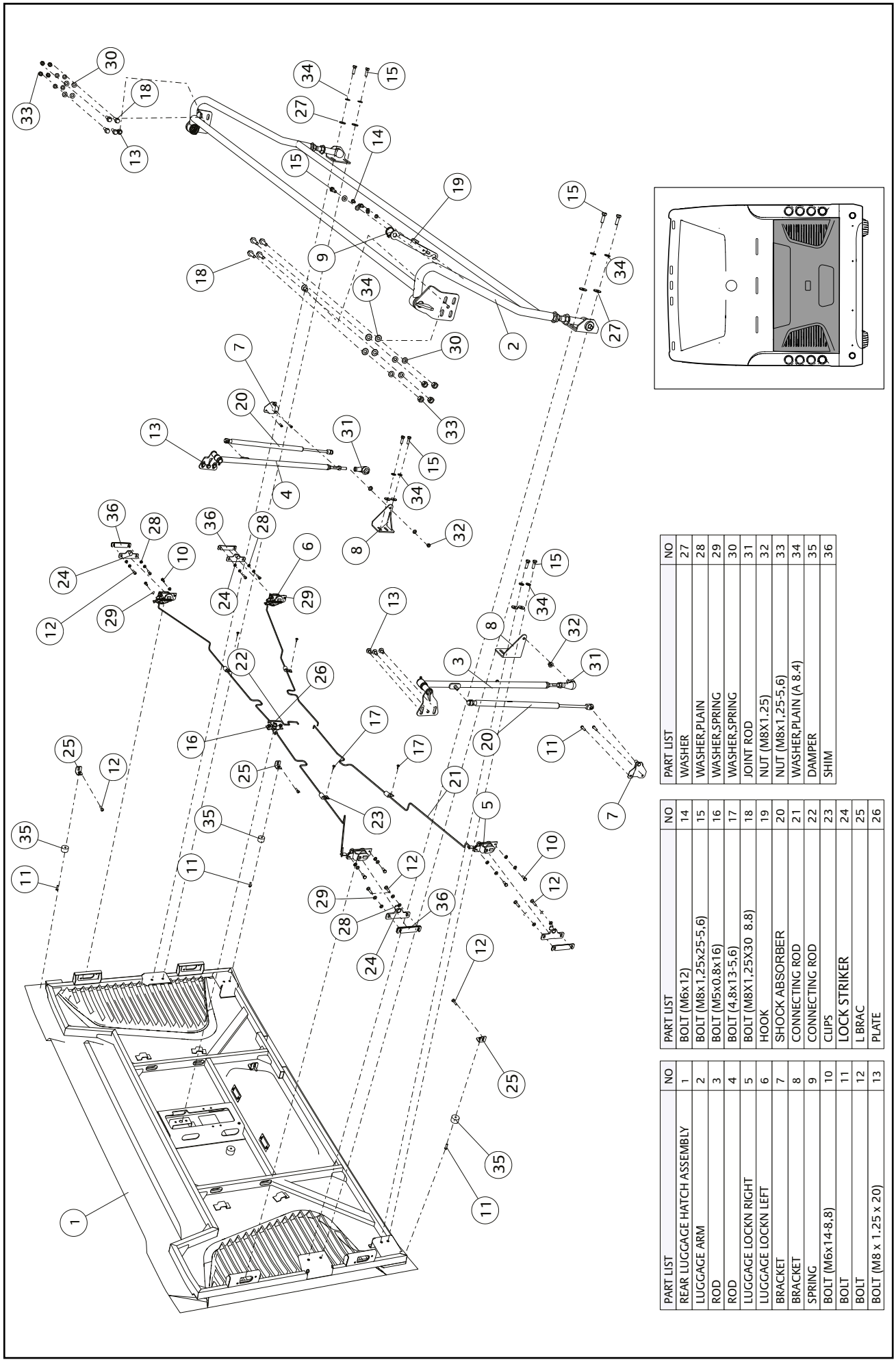

NO	PART LIST
1	REAR LUGGAGE HATCH ASSEMBLY
2	LUGGAGE ARM
3	ROD
4	ROD
5	LUGGAGE LOCKN RIGHT
6	LUGGAGE LOCKN LEFT
7	BRACKET
8	BRACKET
9	SPRING
10	BOLT (M6x14-8,8)
11	BOLT
12	BOLT
13	BOLT (M8 x 1.25 x 20)

NO	PART LIST
14	BOLT (M6x12)
15	BOLT (M8x1,25x25-5,6)
16	BOLT (M5x0.8x16)
17	BOLT (4.8x13-5,6)
18	BOLT (M8X1,25X30 8.8)
19	HOOK
20	SHOCK ABSORBER
21	CONNECTING ROD
22	CONNECTING ROD
23	CLIPS
24	LOCK STRIKER
25	L BRAC
26	PLATE

NO	PART LIST
27	WASHER
28	WASHER,PLAIN
29	WASHER,SPRING
30	WASHER,SPRING
31	JOINT ROD
32	NUT (M8X1.25)
33	NUT (M8x1,25-5,6)
34	WASHER,PLAIN (A 8.4)
35	DAMPER
36	SHIM

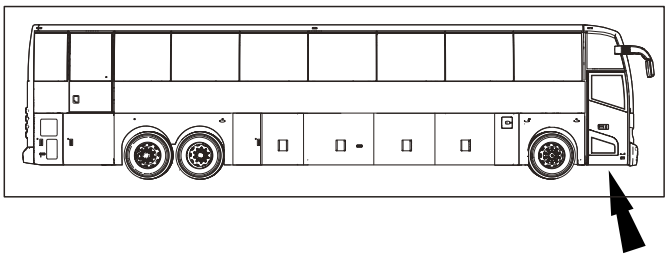

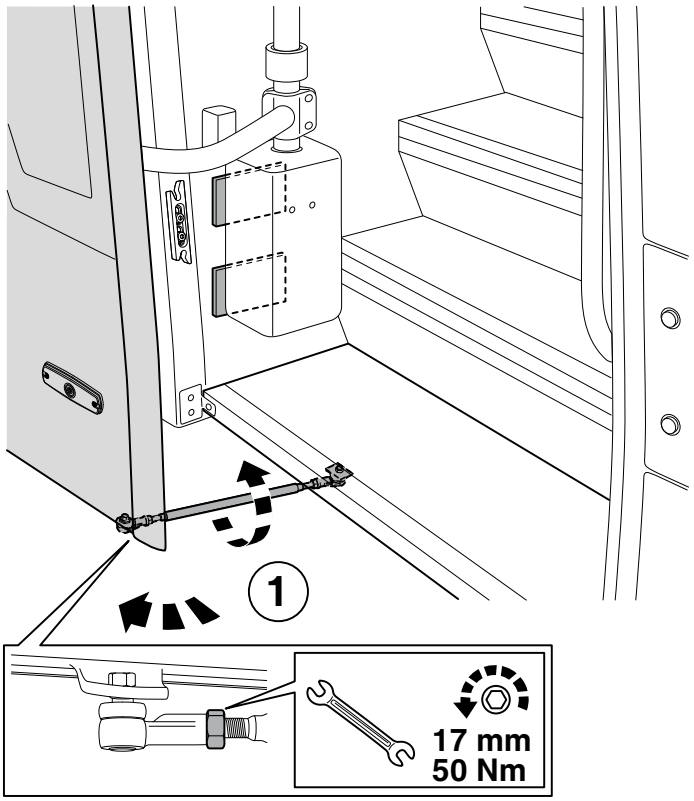

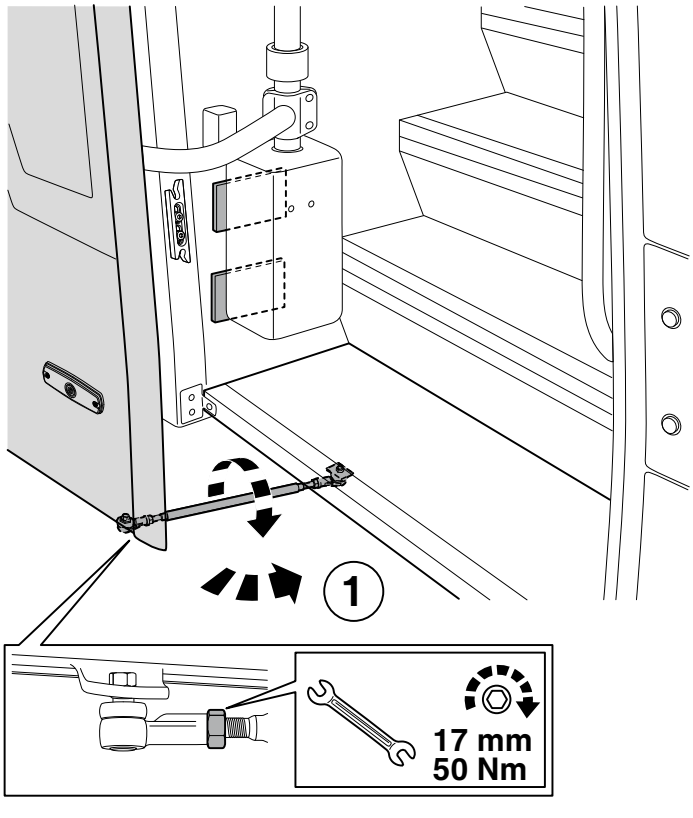

3. ON VEHICLE ADJUSTMENT AND INSPECTION

3.1. DOOR ADJUSTMENT

Adjustment of the Door with Respect to the Door Console:

The door is adjusted in such a way that all the surfaces of it should be flushed to body. When it is not flushed to the body console properly, the adjustment is made in two places. This depends on the door position. In the first adjustment place, it is done by placing a spacer to the back to the bracket which fixes the door carrier arm to the door by a bracket. The second adjustment place, it is done by placing a spacer on the upper part of the tube of the door engine.

1. Adjustment of the settlement to the surface, by turning the stabilizer rod clockwise the door moves in, by turning anticlockwise the door moves out.

CAUTION

Lid pressure must be equal on all surfaces!

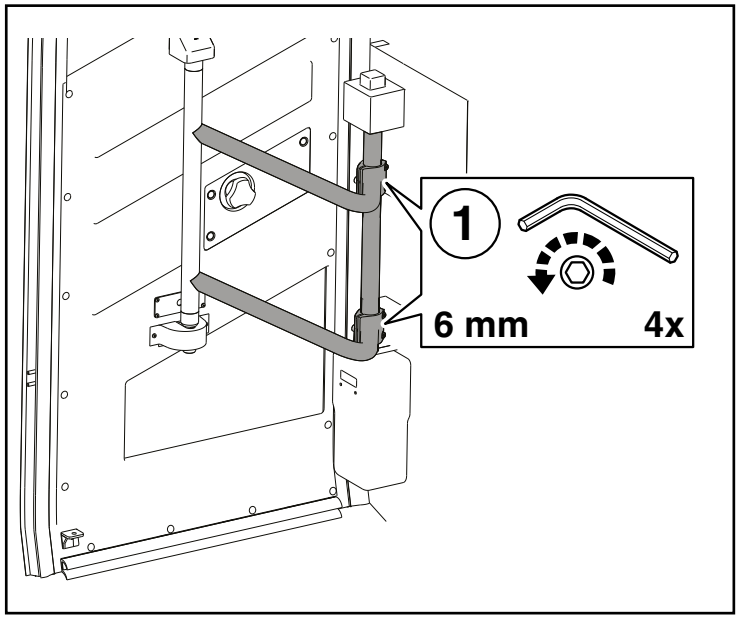

3.1. DOOR ADJUSTMENT

Height Adjustment Of The Door:

1. Loosen the connections of the carrier arms on the piston tube. Then bring the door to a suitable height.

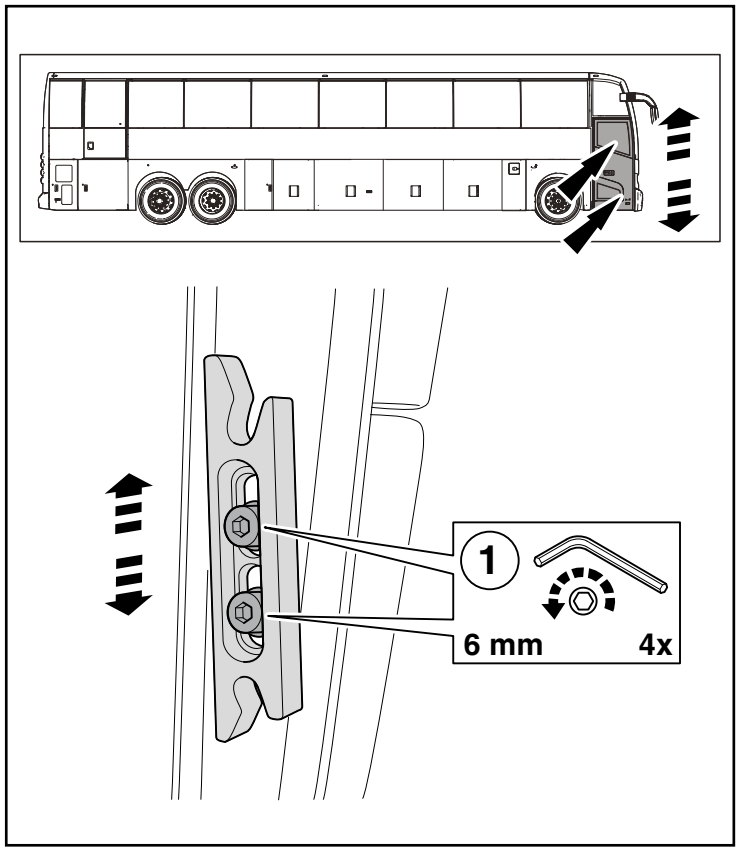

Lock Handle Adjustment of the Door:

1. The lock handle is adjusted to close the door completely. There should be no gap between the weather strips. To adjust the spacer position untighten the 2 bolts using an Allen Key (6 mm), adjust the spacer then tighten the 2 bolts.

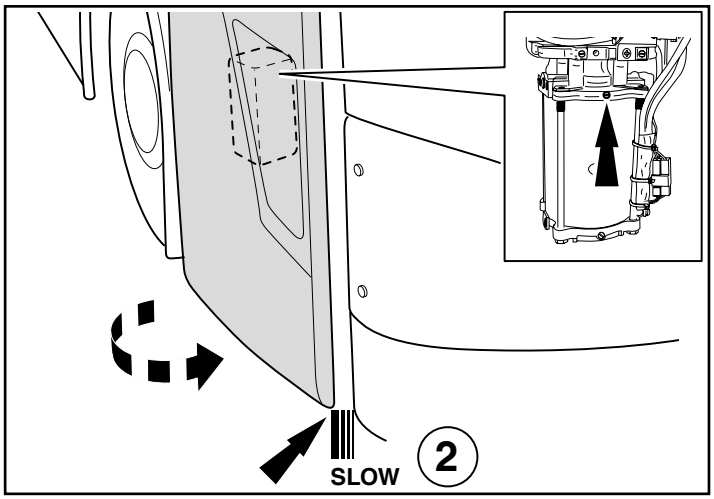

2. While the door is closing there is a point where it slows down and starts to raise. This point is adjusted by the upper screw on the door engine.

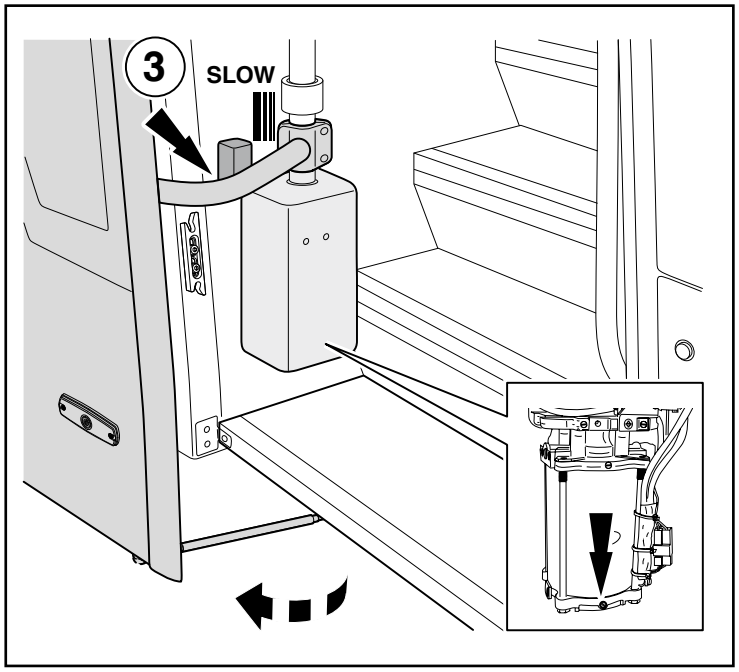

3.1. DOOR ADJUSTMENT

3. While the door is opening there is a point where it slows before touching the damper. This point is adjusted by the lower screw on the door engine.

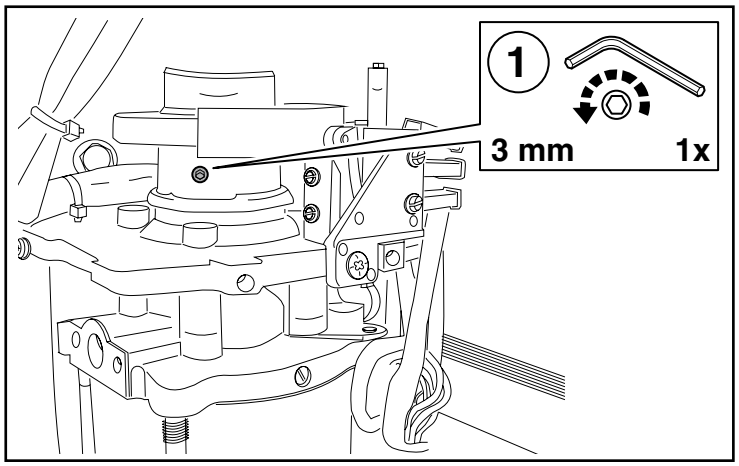

3.2. EMERGENCY SQUEEZING PREVENTION SYSTEM ADJUSTMENT

1. When adjusting the emergency squeezing prevention system initially remove the screw from the door control cylinder cover. Fasten adjustment screw in clockwise direction.

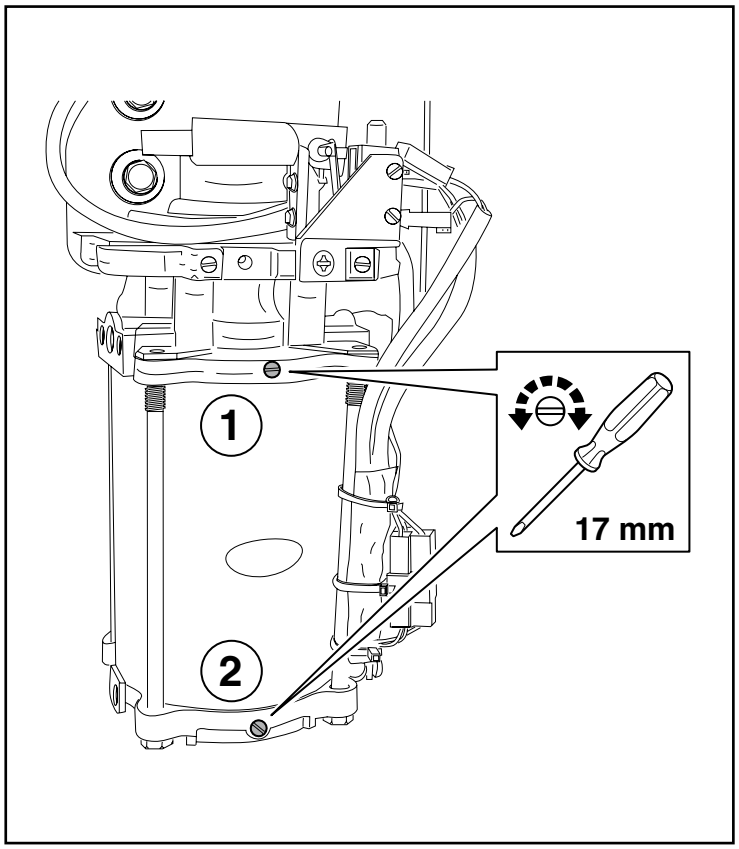

3.3. FINAL DOOR CLOSING AND OPENING BRAKE ADJUSTMENT

Door Closing Brake Adjustment

1. Door brake adjustment is made by tightening or loosening the screw/screws. Clockwise turning slows door closing speed. Anti-clockwise increases door closing speed.

Door Opening Brake Adjustment

2. Door brake adjustment is made by tightening or loosening the screw/screws. Clockwise turning slows door opening speed. Anti-clockwise increases door opening speed.

WARNING

- The door must be adjusted flush to the surface.
- Closing and Opening speeds must be the same.

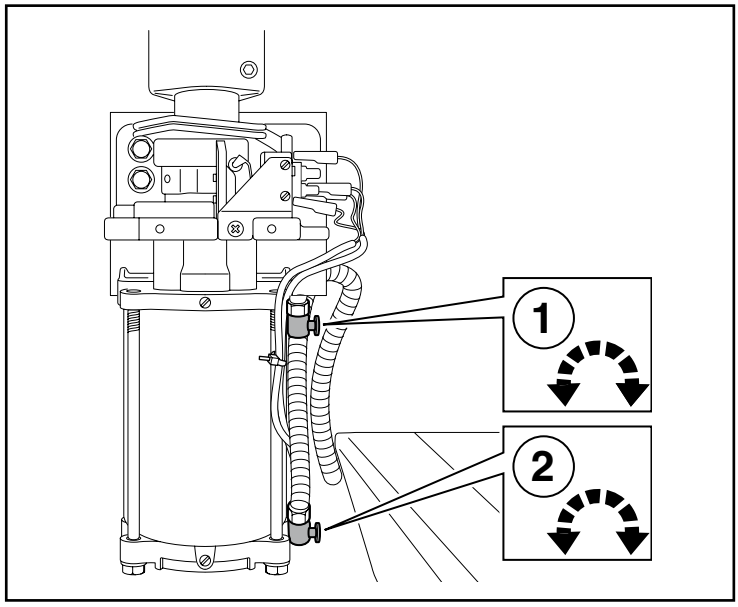

3.4. MAIN DOOR CLOSING AND OPENING SPEED ADJUSTMENT

1. Main door adjustment is made by tightening or loosening the screw/screws. Clockwise turning slows door closing speed. Anti-clockwise increases door closing speed.
2. Main door adjustment is made by tightening or loosening the screw/screws. Clockwise turning slows door opening speed. Anti-clockwise increases door opening speed.

WARNING

Closing and Opening speeds must be the same.

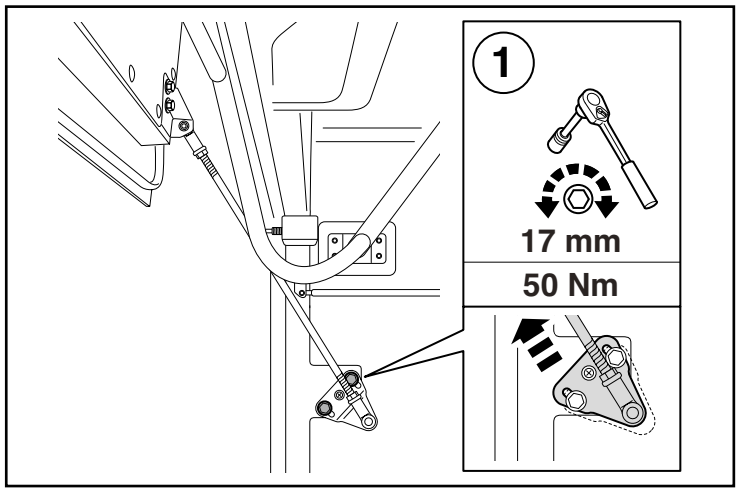

3.5. LID ADJUSTMENT

The lid can be adjusted by up or down, right or left. It must be parallel to the vehicle.

Adjustment parallel:

1. Luggage arms are lifted or lowered up and down.

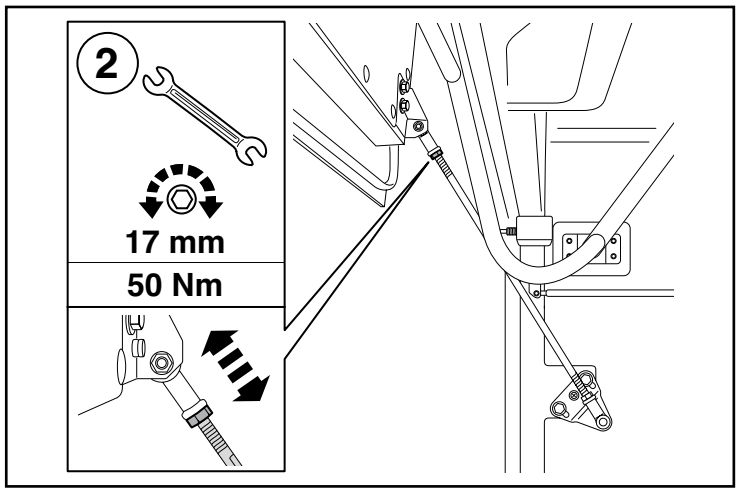

2. Balance rods are shortened or lengthened by screwing or unscrewing the rods.

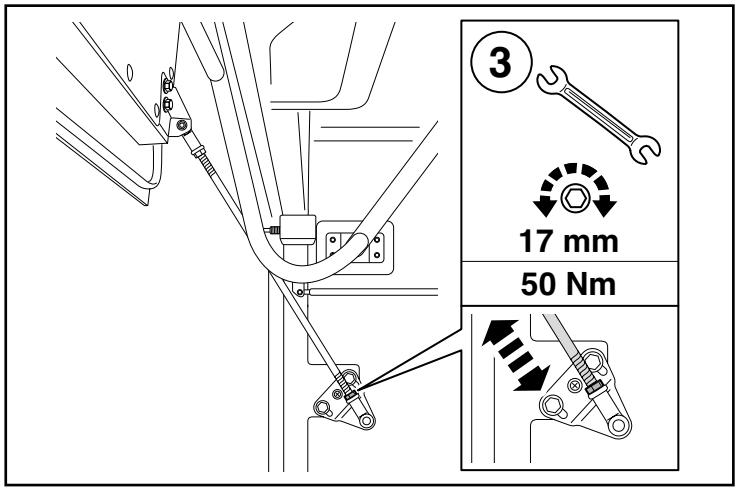

3.5. LID ADJUSTMENT

Adjustment parallel:

3. Luggage arms are shortened or lengthened by screwing or unscrewing the rods.

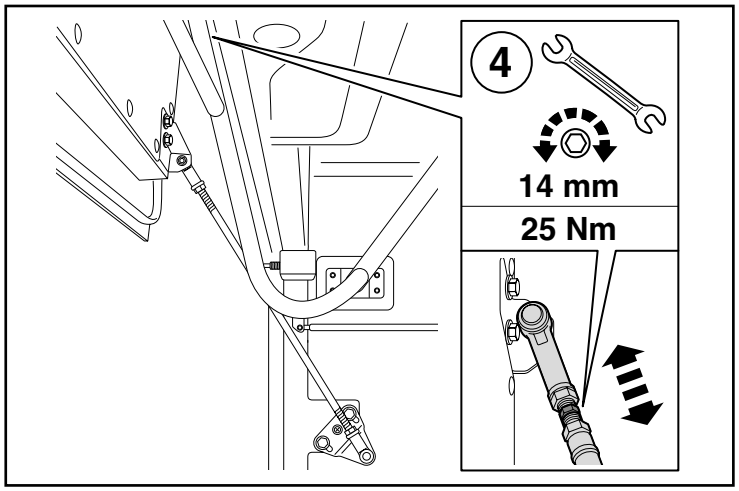

4. Main adjustment of lid is made by screwing or unscrewing rod.

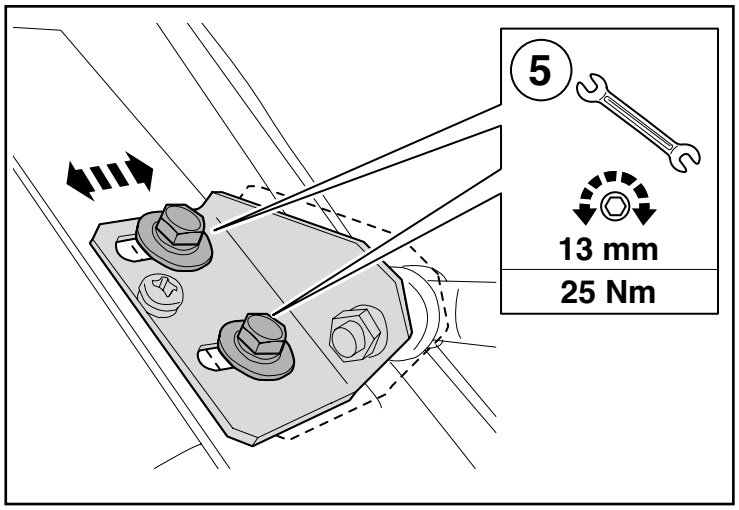

Adjustment right or left:

5. Right or left adjustment is made by loosening the 2 bolts and repositioning in the slots then retighten.

CAUTION

The lids must have equal pressure on all sides touching the body.

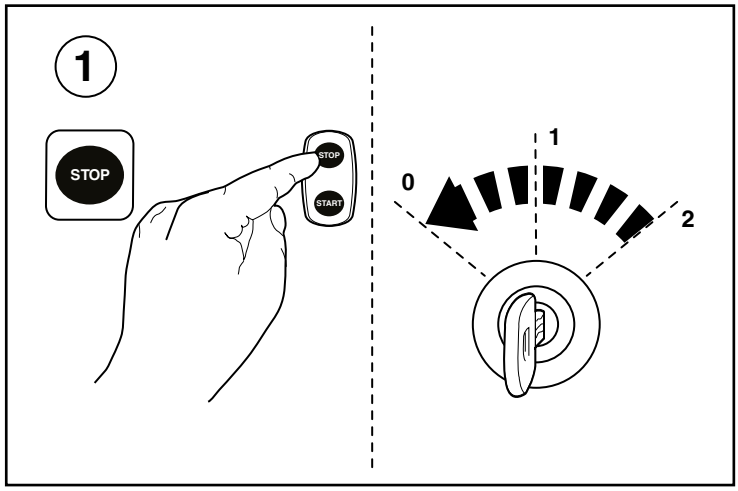

4. SERVICE PROCEDURE

4.1. REMOVAL AND INSTALLATION OF DOOR

Door Disassembly:

1. Turn the ignition key to off position.

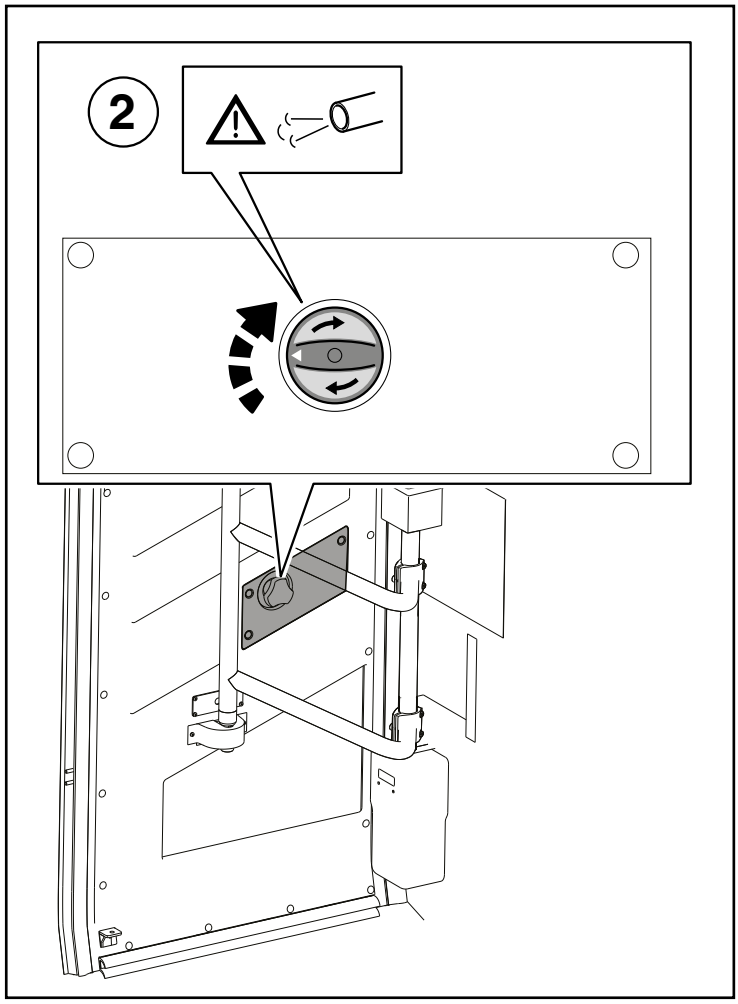

2. By using emergency exit valve release the door air.

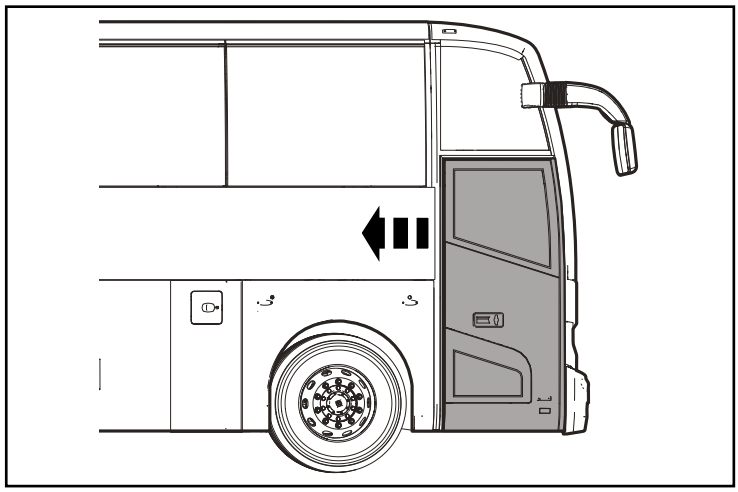

3. Bring the door to the center position/idle time.

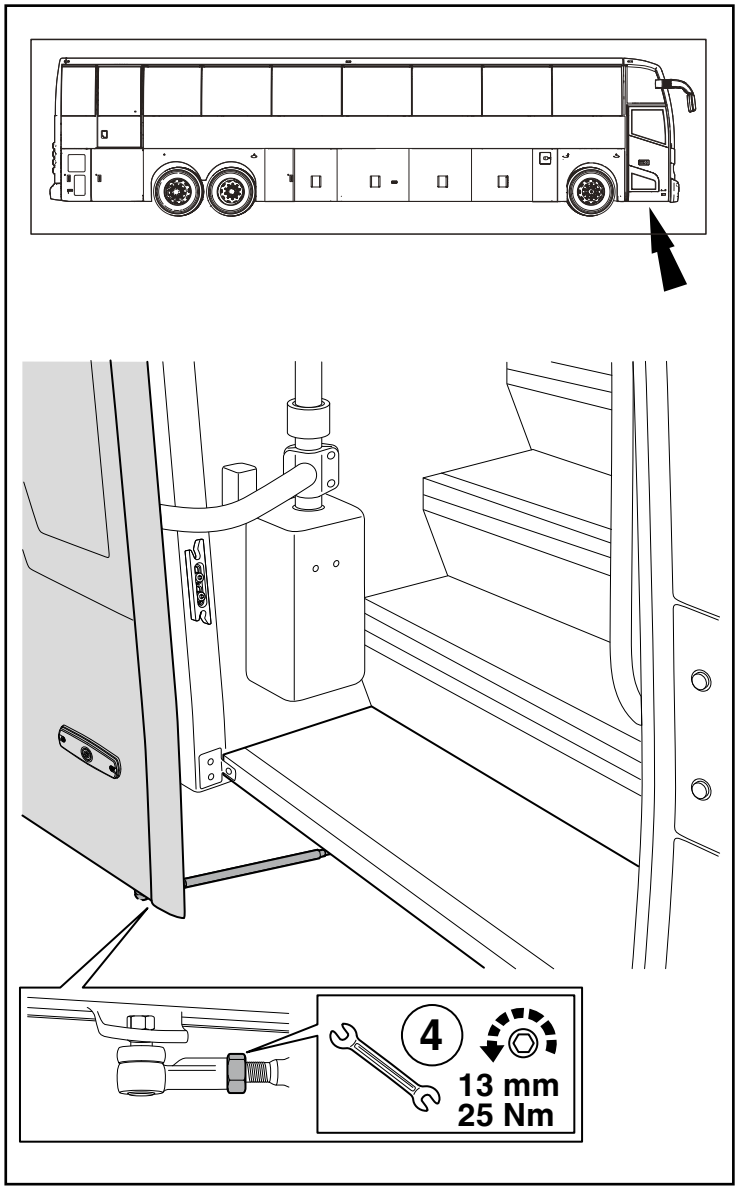

4.1. REMOVAL AND INSTALLATION OF DOOR

Door Disassembly:

4. Remove adjusting nut of the stabilizer rod on the door.

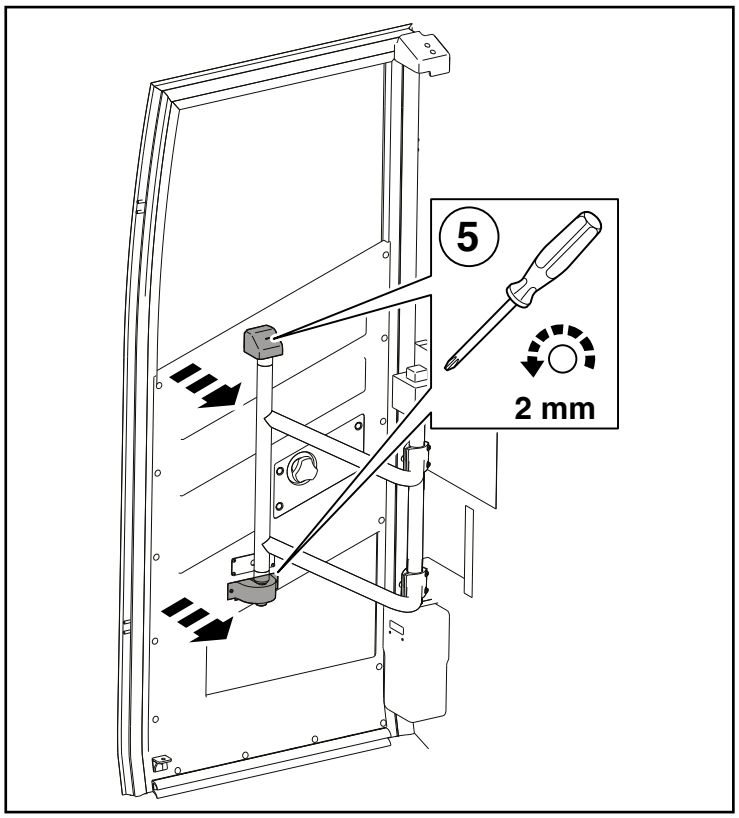

5. Disassemble the door carrier arm from the lower connection bracket and upper connection bracket.

CAUTION

- After removing the adjusting nut the door will be free, be careful the door does not hit the body work.
- After removing the door carrier arm the door will be free, support to prevent from falling down.

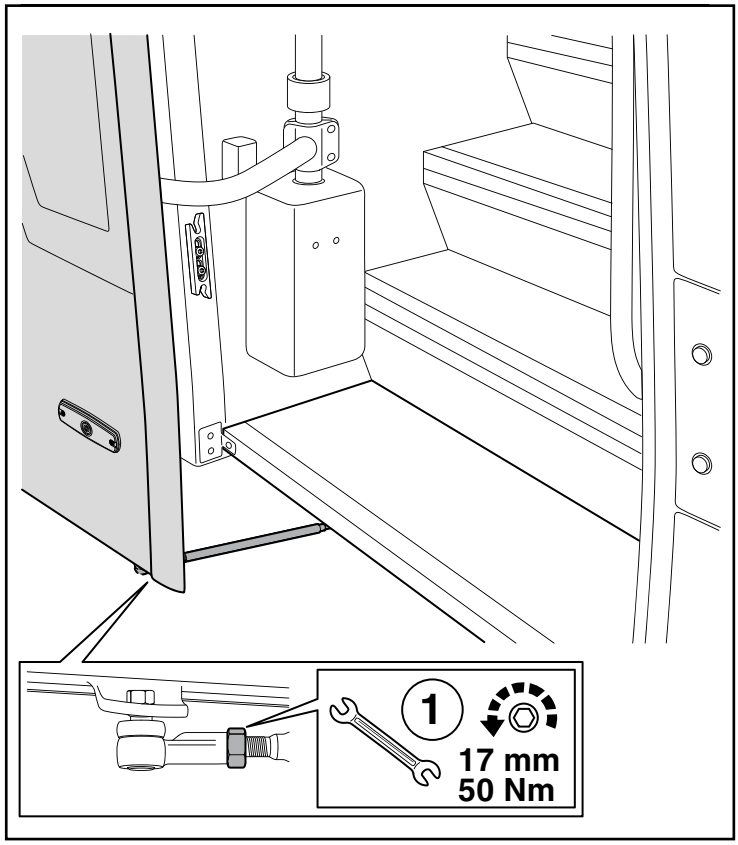

4.1. REMOVAL AND INSTALLATION OF DOOR

Door Assembly:

1. Assembly sequence is the reverse sequence of the disassembly process.

Disassembly of the Door Carrier Arm:

1. First disassemble the door.
2. Remove the arm assembly bolts.

Assembly of the Door Carrier Arm:

1. Assembly sequence is the reverse sequence of the disassembly process.

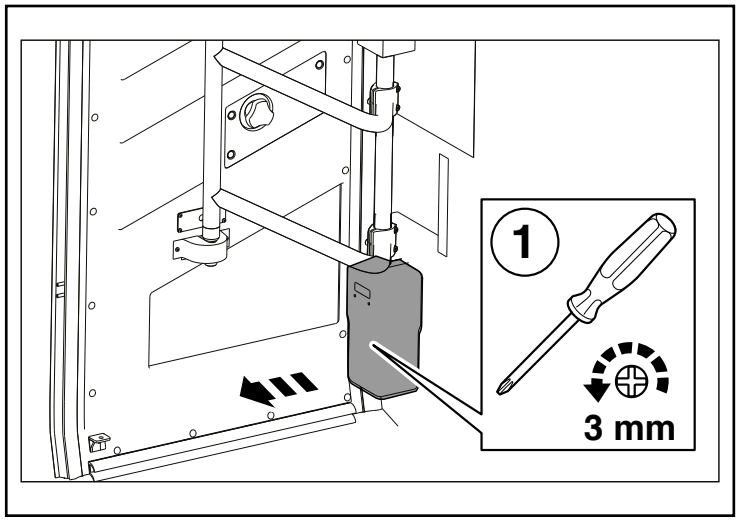

Disassembly of the Door Control Cylinder from the Vehicle:

1. Remove the door engine guard.

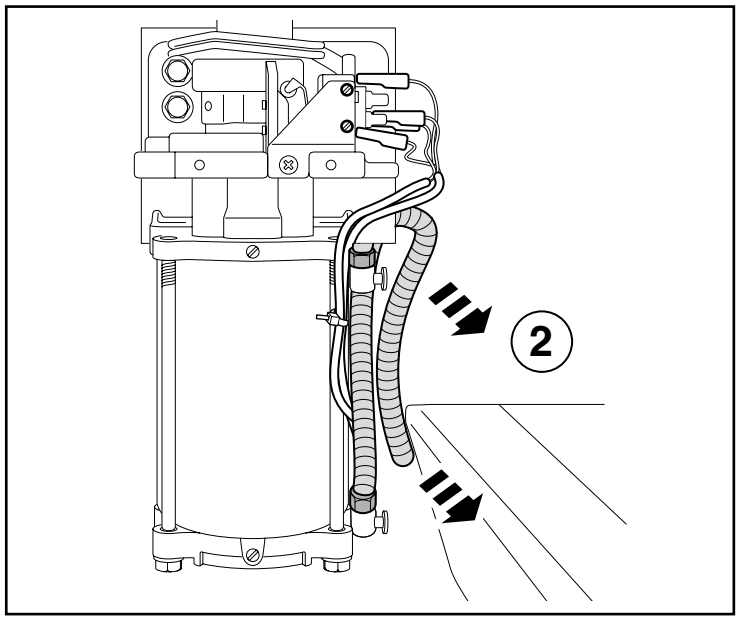

2. Remove the upper and lower air inlet connection adaptors of the door engine.

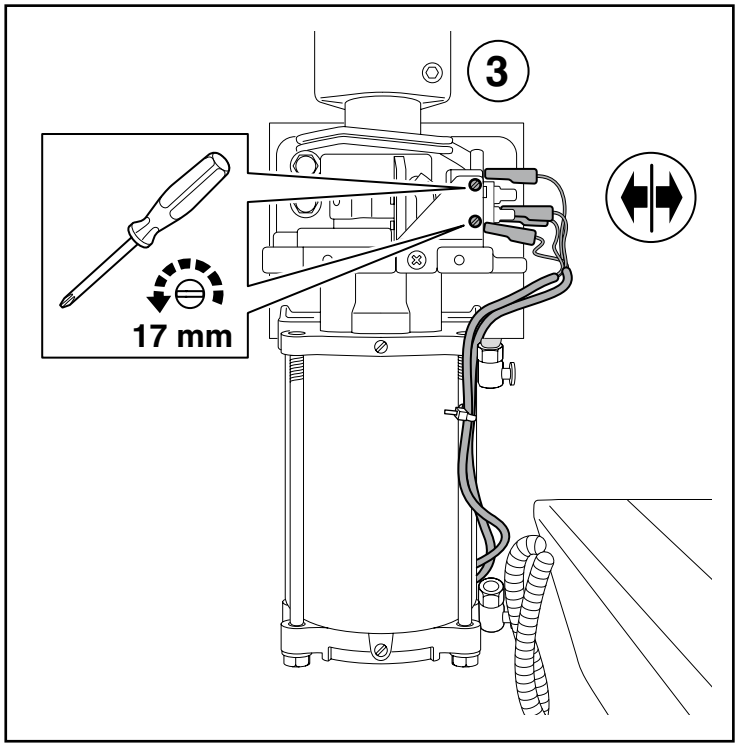

4.1. REMOVAL AND INSTALLATION OF DOOR

Disassembly of the Door Control Cylinder from the Vehicle:

3. Remove the screws and connections of the safety switch.

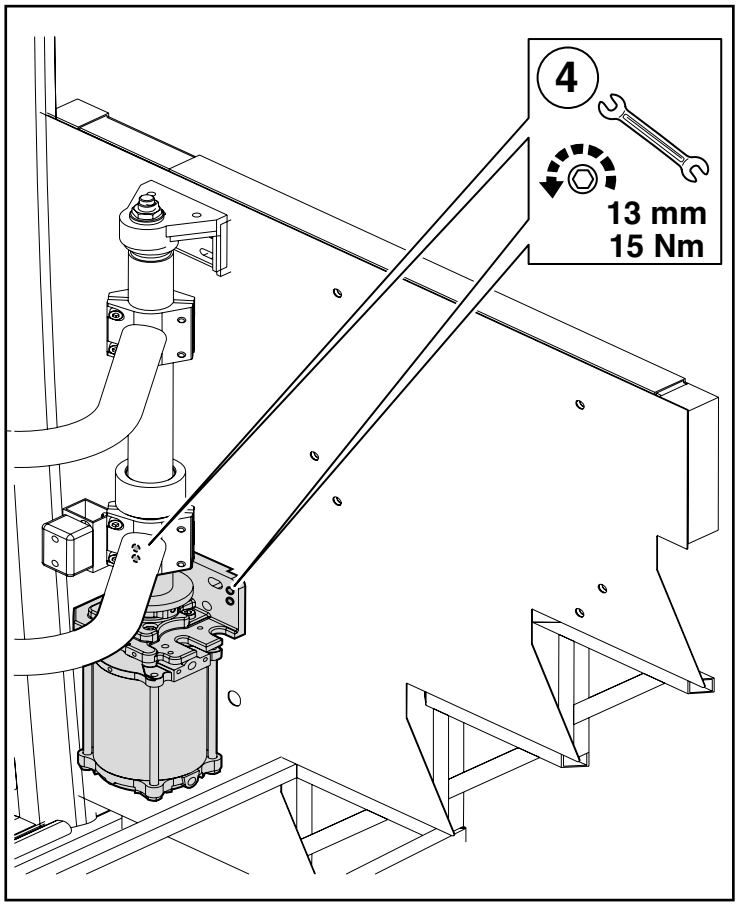

4. Remove the bolts which connects door engine to the vehicle body (on the sliding L joint).

Assembly of the Door Control Cylinder from the Vehicle::

1. Assembly is the reverse of the disassembly process.

23 INTERIOR TRIMMING

Rev.00 / 25.03.14

1. TOOLS 3

2. DASHBOARD 4

2.1. Exploded View Of Dashboard 4

3. FRONT HEADLINING 6

3.1. Exploded View Of Front Headlining 6

4. MAINTENANCE LIDS 7

4.1. Exploded View Of Maintenance Lids 7

5. ROOF TRIMMING 8

5.1. Exploded View Of Roof Trimming 8

6. LUGGAGE RACK 9

6.1. Removal Of Luggage Rack 9

7. REAR HEADLINING 10

7.1. Exploded View Of Rear Headlining 10

8. WINDOW SIDE PANEL 11

8.1. Exploded View Of Window Side Panel 11

8.2. Installation Of Window Side Panel 12

9. PARTITION PANEL 13

9.1. Exploded View Of Partition Panel 13

10. EMERGENCY EXIT WINDOW 14

10.1. Exploded View Of Emergency Exit Window 14

10.2. Removal Of Emergency Exit Window 15

11. SIDE PANEL 16

11.1. Exploded View Of Side Panel 16

12. CURTAIN 17

12.1. Exploded View Of Curtain 17

13. INSIDE MIRROR 18

13.1. Exploded View Of Inside Mirror 18

14. SUN VISOR 18

14.1. Exploded View Of Sun Visor 18

15. HANDLE..... 19
15.1. Exploded View Of Handle 19
16. LAVATORY..... 20
16.1. Exploded View Of Lavatory 20

GENERAL

- If work is performed by people who do not have the necessary training to carry out the work or if this information is handled carelessly or totally ignored, this may result in severe injury and/or death. Inaddition, serious damage to the vehicle may occur.
- Always read the safety instructions in full before starting certain operations. The safety instructions stipulate which aspects must be considered to achieve maximum safety. The information is given that is very important for health and safety.
- Always work in adequately ventilated rooms with sufficient lighting, free from dirt and clutter. Never leave tools or parts lying around, keep away from (high-) voltage sources that present a risk of short-circuiting. Always wear protective clothing. Do not wear any damaged or loose-fitting clothing and remove jewelry before starting the work. In case of long hair use hairnet.

1. TOOLS

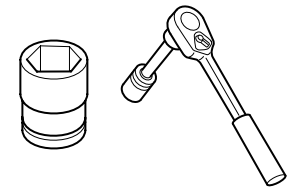 Impact Socket	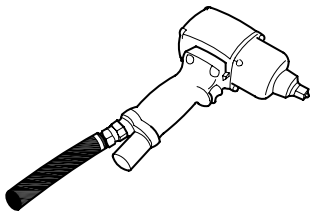 Impact Wrenches	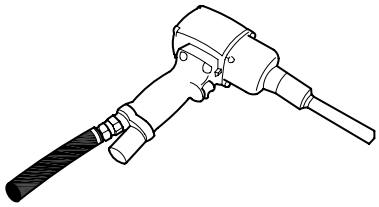 Drill
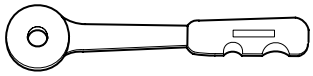 Drive Tools	 Sonic	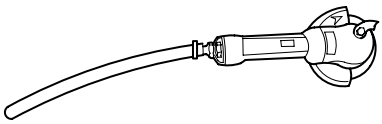 Grinders
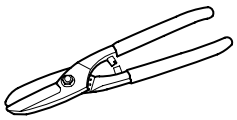 Metal Sheet Scissors	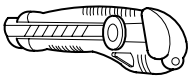 Cutter	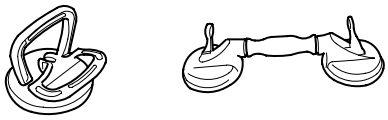 Rubber Suction
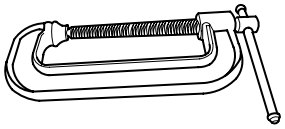 Clump	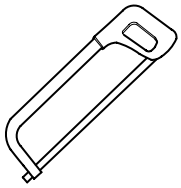 Saw	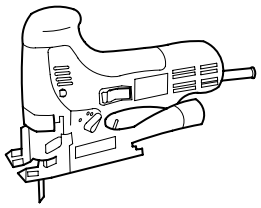 Jig Saw
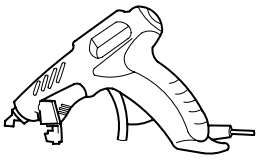 PVC Machine	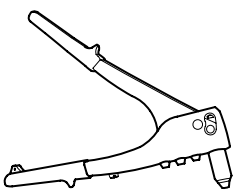 Rivet Machine	Stripping Plier 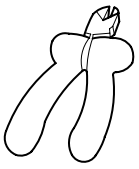  Adhesive Material Cup

2. DASHBOARD

2.1. EXPLODED VIEW OF DASHBOARD

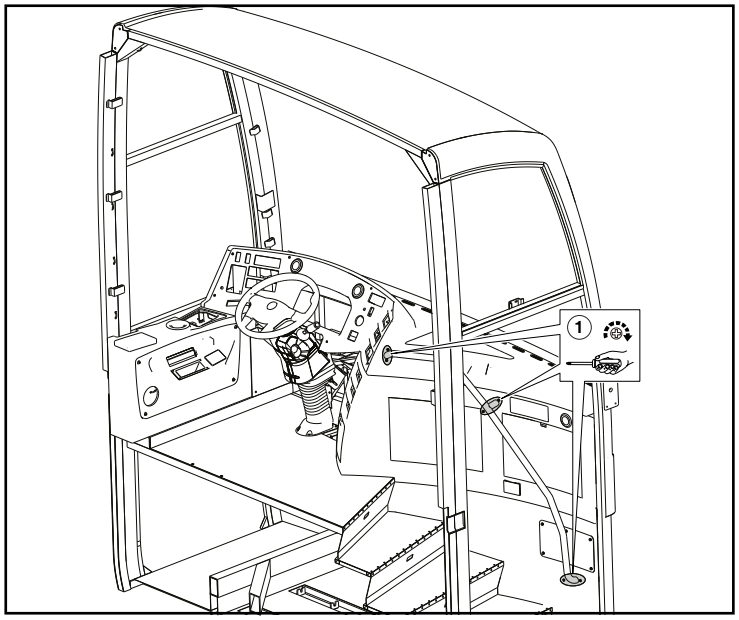

1. Unscrew the holding pipe screws.

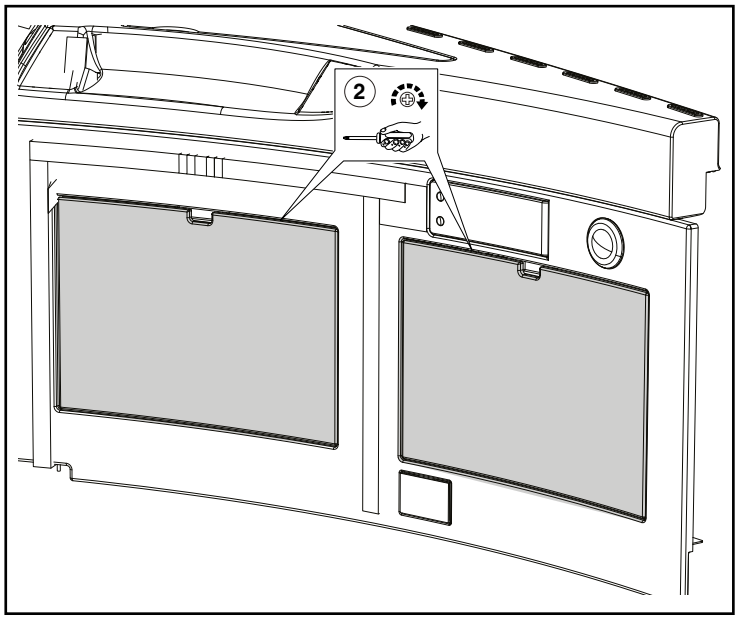

2. Unscrew the maintenance lids screws and remove the maintenance lids.

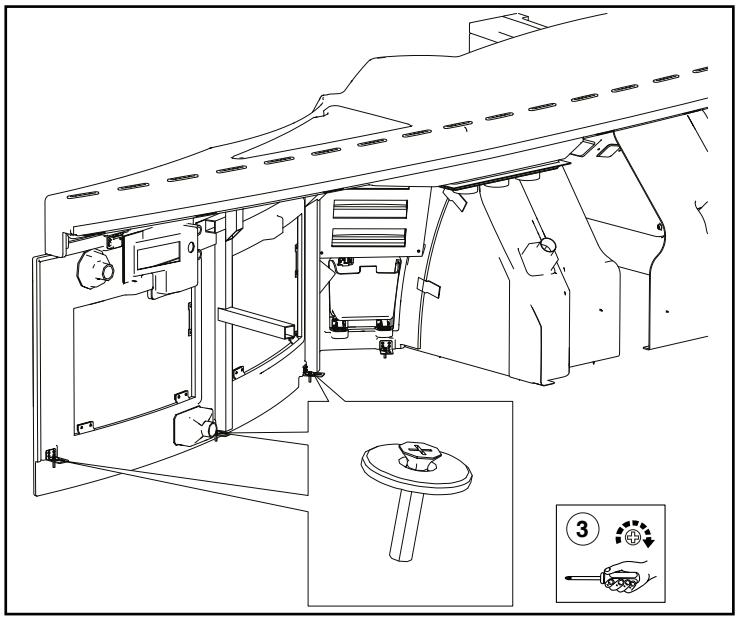

3. Remove the bolts.

2.1. EXPLODED VIEW OF DASHBOARD

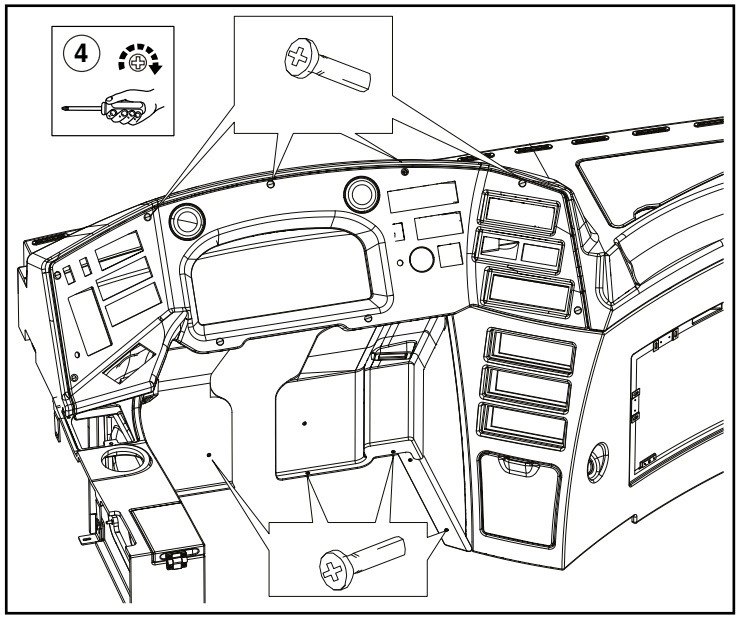

4. Unscrew the screws.

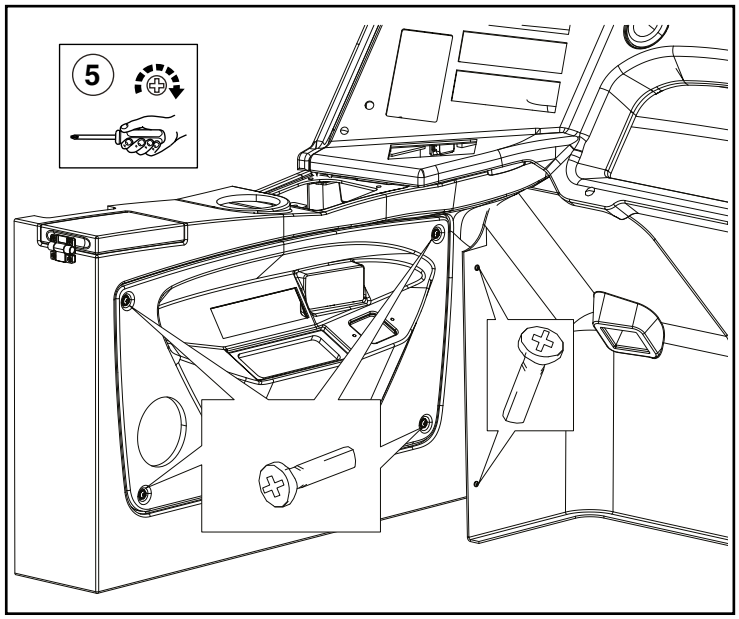

5. Unscrew the lateral panel maintenance lid screws.

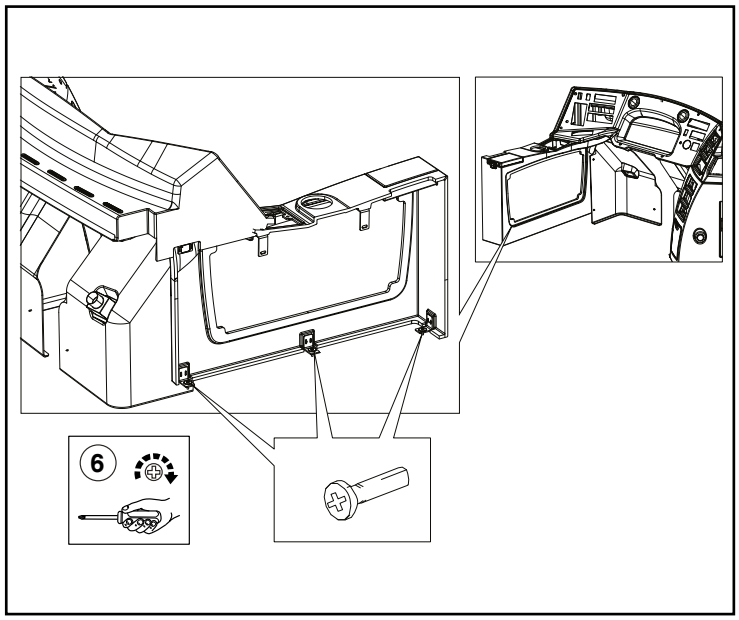

6. Remove the bolts.

3. FRONT HEADLINING

3.1. EXPLODED VIEW OF FRONT HEADLINING

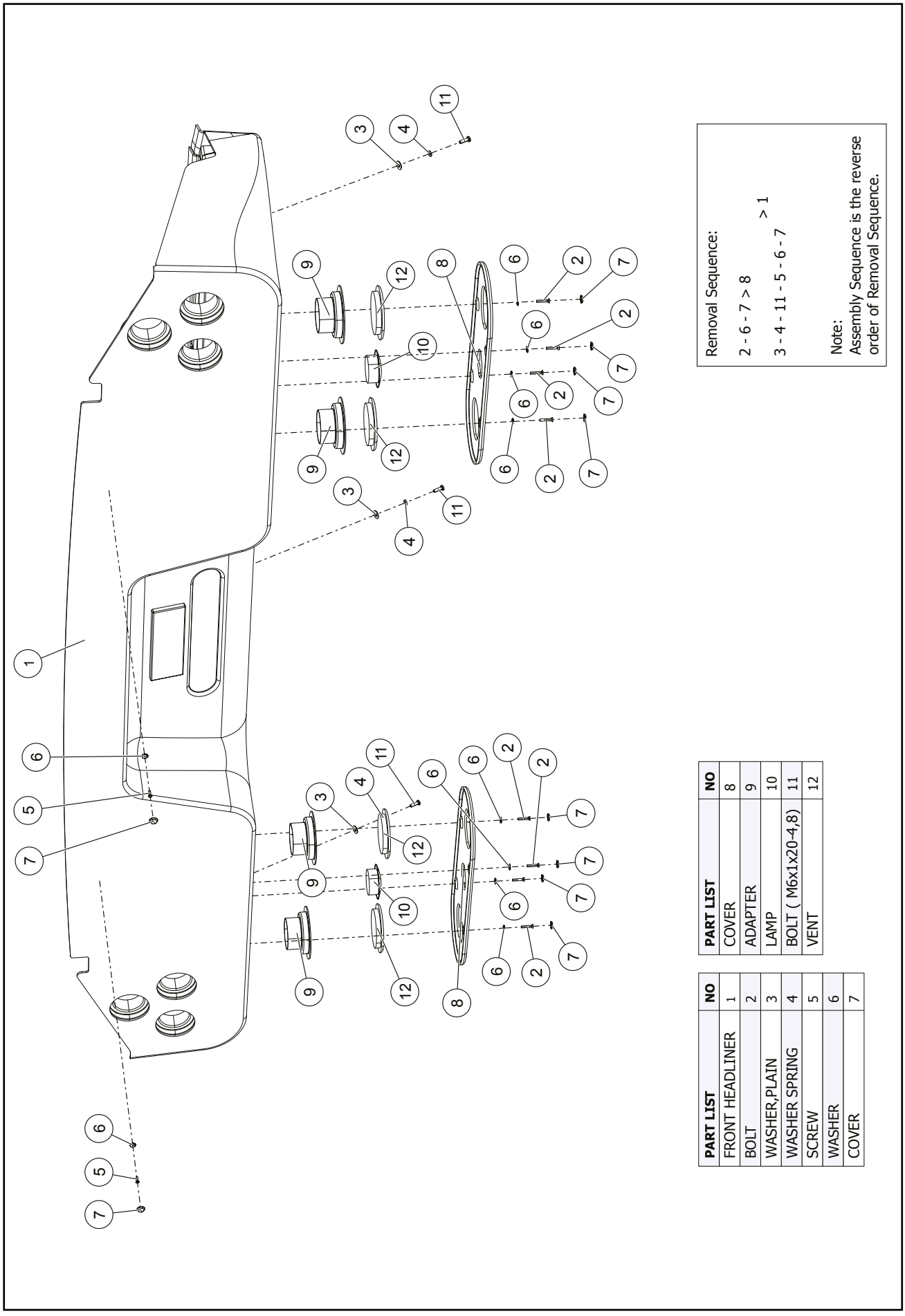

Removal Sequence:

2 - 6 - 7 > 8

> 1

3 - 4 - 11 - 5 - 6 - 7

Note:
Assembly Sequence is the reverse order of Removal Sequence.

PART LIST	NO
FRONT HEADLINER	1
BOLT	2
WASHER,PLAIN	3
WASHER SPRING	4
SCREW	5
WASHER	6
COVER	7

PART LIST	NO
COVER	8
ADAPTER	9
LAMP	10
BOLT (M6x1x20-4,8)	11
VENT	12

4. MAINTENANCE LIDS

4.1. EXPLODED VIEW OF MAINTENANCE LIDS

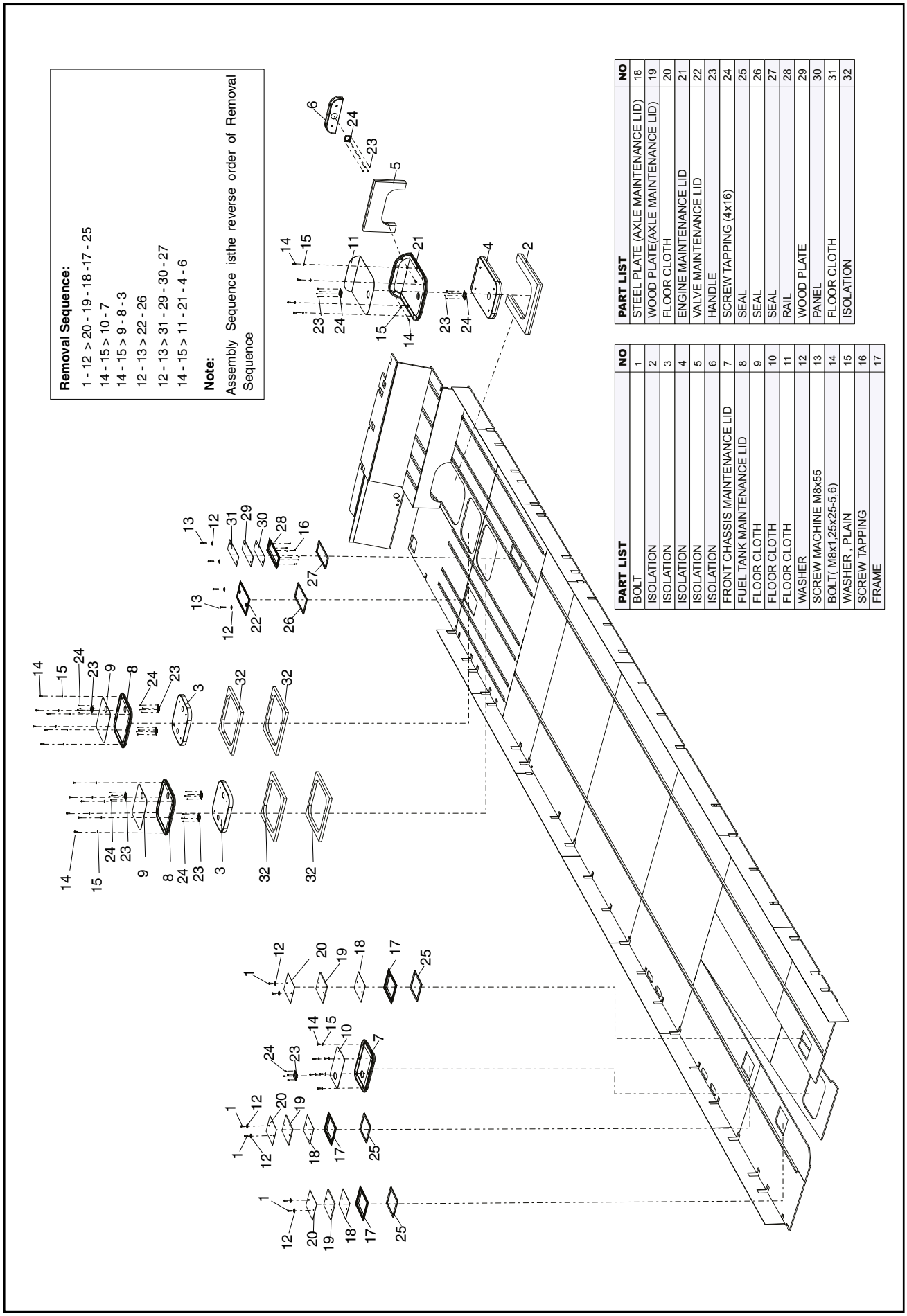

PART LIST	NO
BOLT	1
ISOLATION	2
ISOLATION	3
ISOLATION	4
ISOLATION	5
ISOLATION	6
FRONT CHASSIS MAINTENANCE LID	7
FUEL TANK MAINTENANCE LID	8
FLOOR CLOTH	9
FLOOR CLOTH	10
FLOOR CLOTH	11
WASHER	12
SCREW MACHINE M8x55	13
BOLT(M8x1,25x25-5,6)	14
WASHER , PLAIN	15
SCREW TAPPING	16
FRAME	17

PART LIST	NO
STEEL PLATE (AXLE MAINTENANCE LID)	18
WOOD PLATE(AXLE MAINTENANCE LID)	19
FLOOR CLOTH	20
ENGINE MAINTENANCE LID	21
VALVE MAINTENANCE LID	22
HANDLE	23
SCREW TAPPING (4x16)	24
SEAL	25
SEAL	26
SEAL	27
RAIL	28
WOOD PLATE	29
PANEL	30
FLOOR CLOTH	31
ISOLATION	32

5. ROOF TRIMMING

5.1. EXPLODED VIEW OF ROOF TRIMMING

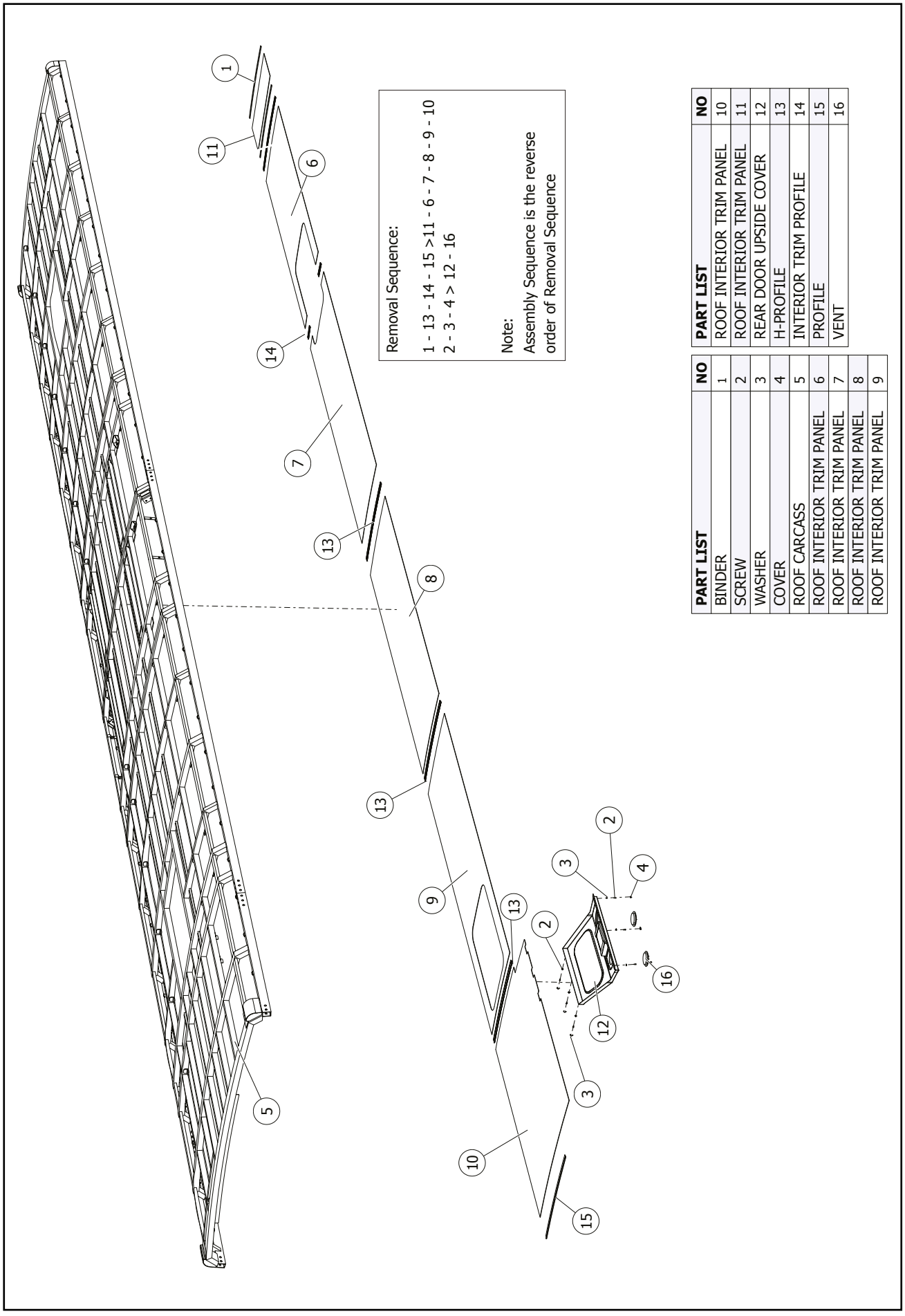

PART LIST	NO
BINDER	1
SCREW	2
WASHER	3
COVER	4
ROOF CARCASS	5
ROOF INTERIOR TRIM PANEL	6
ROOF INTERIOR TRIM PANEL	7
ROOF INTERIOR TRIM PANEL	8
ROOF INTERIOR TRIM PANEL	9

PART LIST	NO
ROOF INTERIOR TRIM PANEL	10
ROOF INTERIOR TRIM PANEL	11
REAR DOOR UPSIDE COVER	12
H-PROFILE	13
INTERIOR TRIM PROFILE	14
PROFILE	15
VENT	16

6. LUGGAGE RACK

6.1. REMOVAL OF LUGGAGE RACK

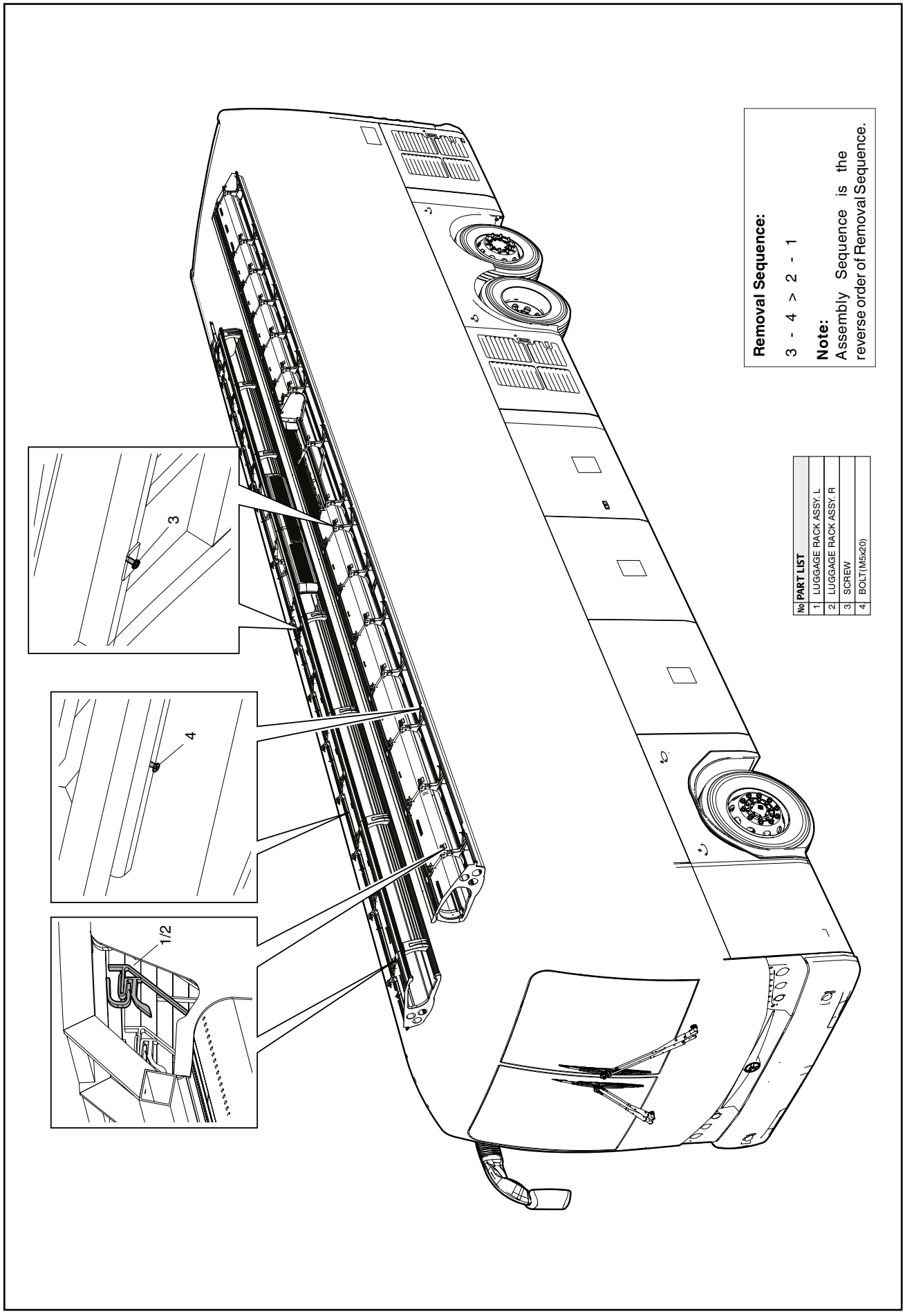

7. REAR HEADLINING

7.1. EXPLODED VIEW OF REAR HEADLINING

Removal Sequence:
10 > 2 - 9

4 - 5 -6 > 1 - 7 - 8

Note:
Assembly Sequence is the reverse order of Removal Sequence.

PART LIST	NO
REAR HEADLINER	1
PLATE, WC LAMP	2
VENT	3
SCREW	4
WASHER	5
SCREW COVER	6
REAR INTERIOR TRIM PANEL , LEFT	7
REAR INTERIOR TRIM PANEL	8
LAVATORY OCCUPIED	9
SCREW	10

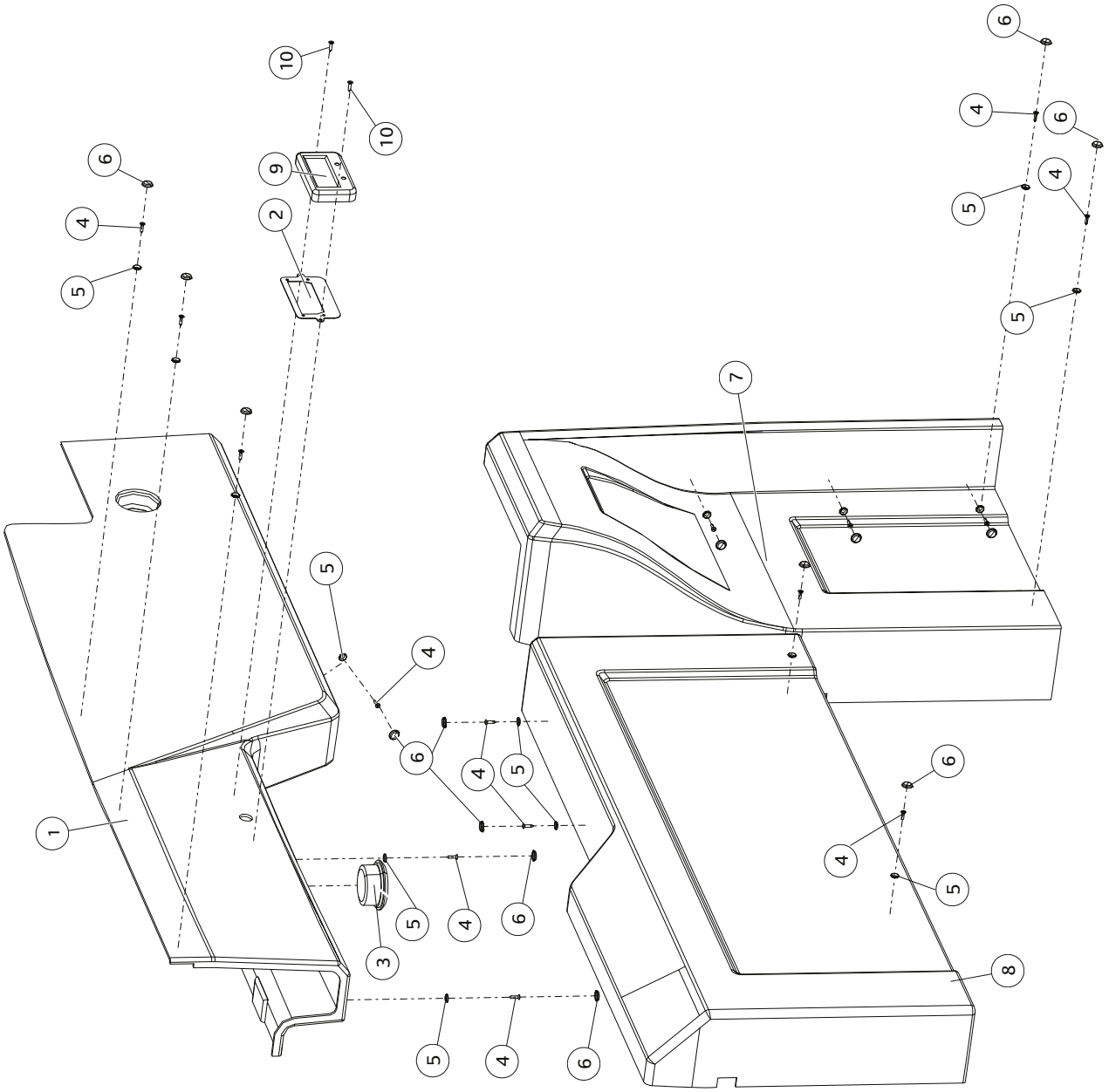

8. WINDOW SIDE PANEL

8.1. EXPLODED VIEW OF WINDOW SIDE PANEL

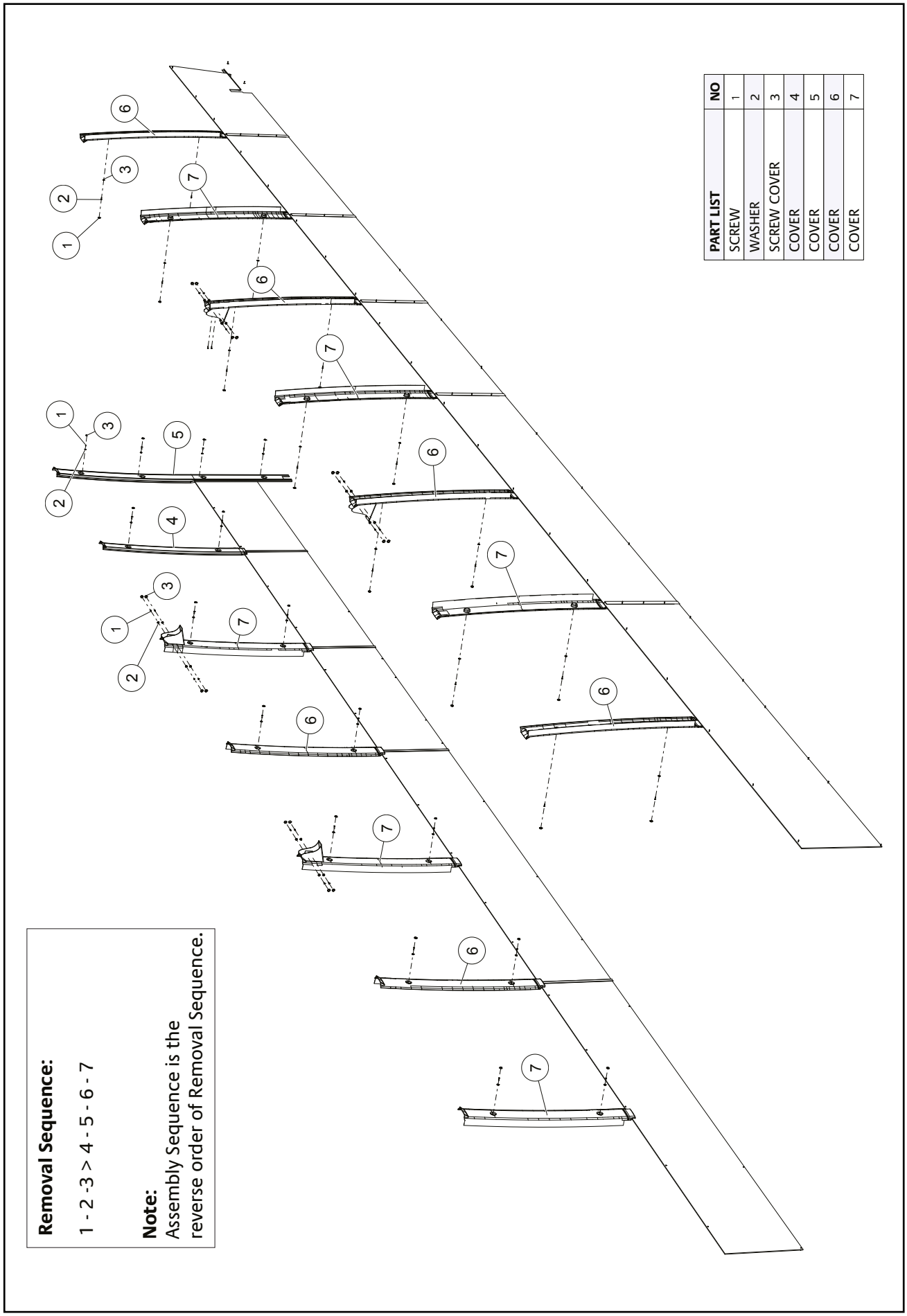

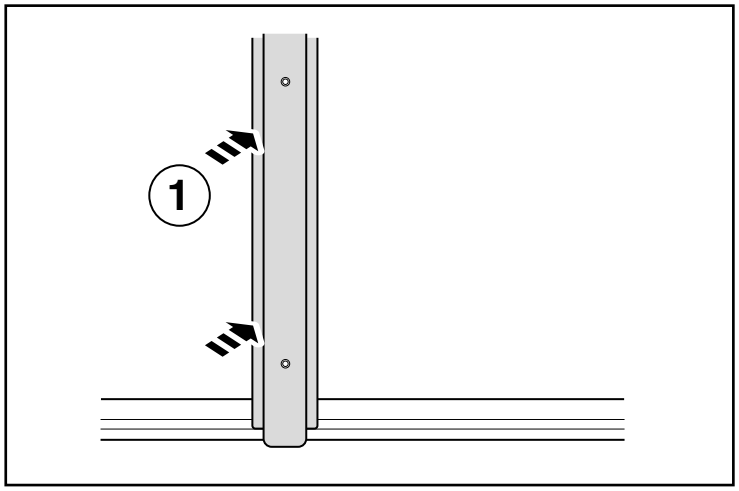

8.2. INSTALLATION OF WINDOW SIDE PANEL

1. Hold the window side pannels and pull it in the arrow direction to remove the window side pannels and be careful to not damage side pannels.

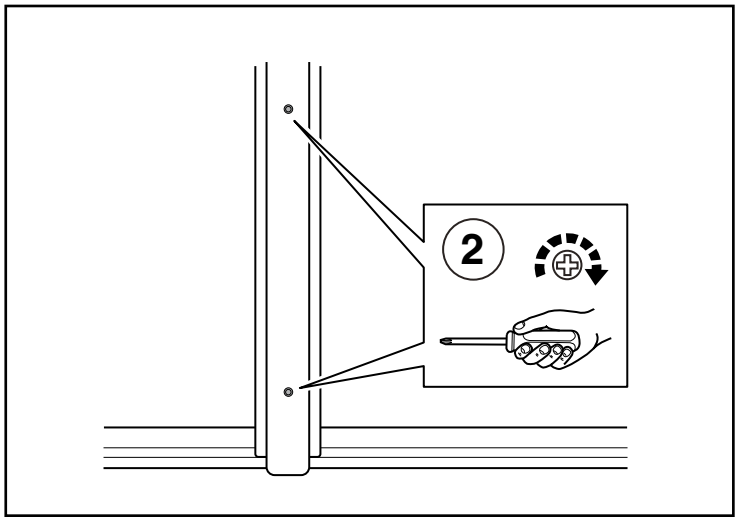

2. Pull the window side panel in the direction of the arrow to remove. Take care not to damage. When installing window side panels put a screw through the groove.

9. PARTITION PANEL

9.1. EXPLODED VIEW OF PARTITION PANEL

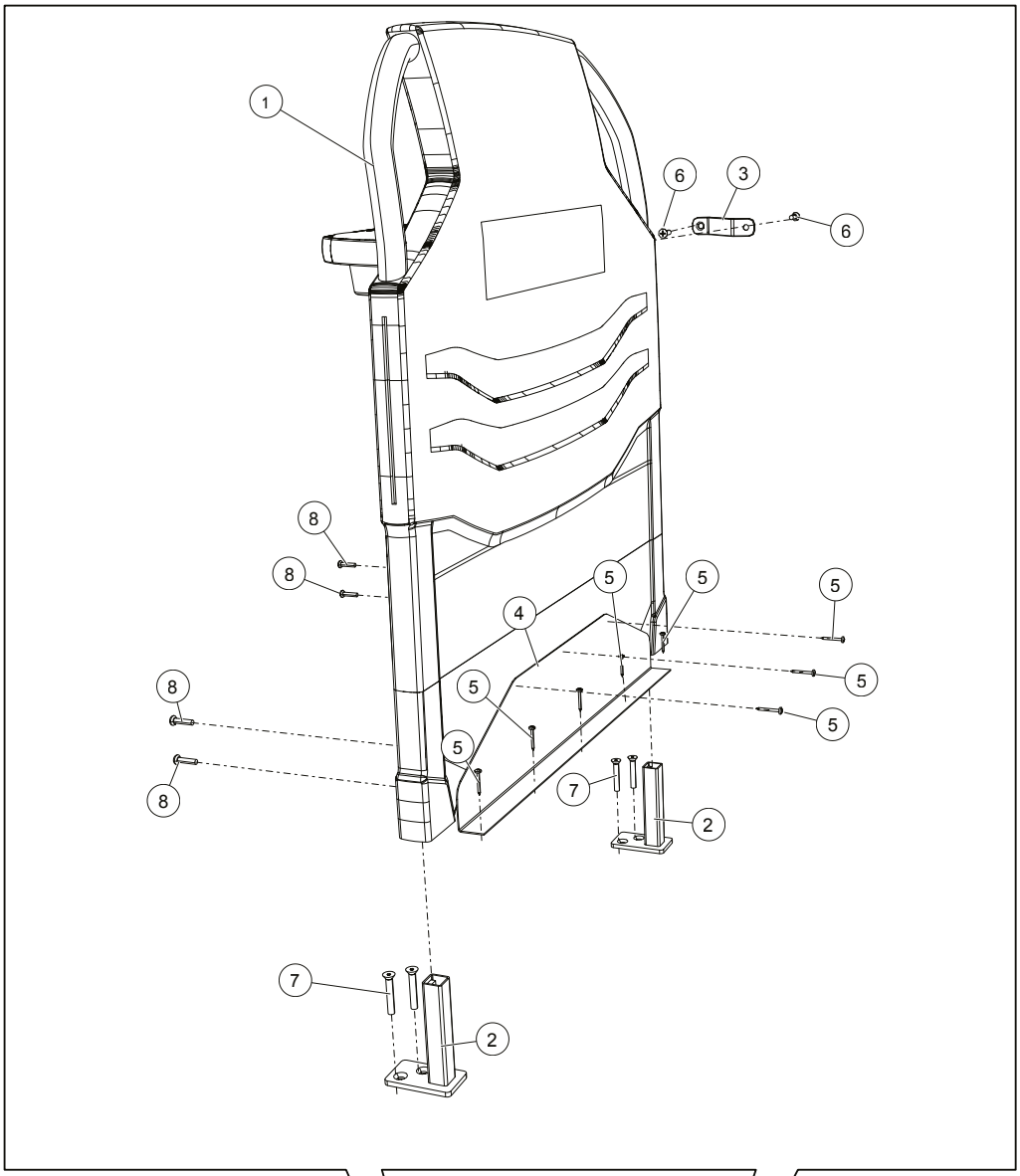

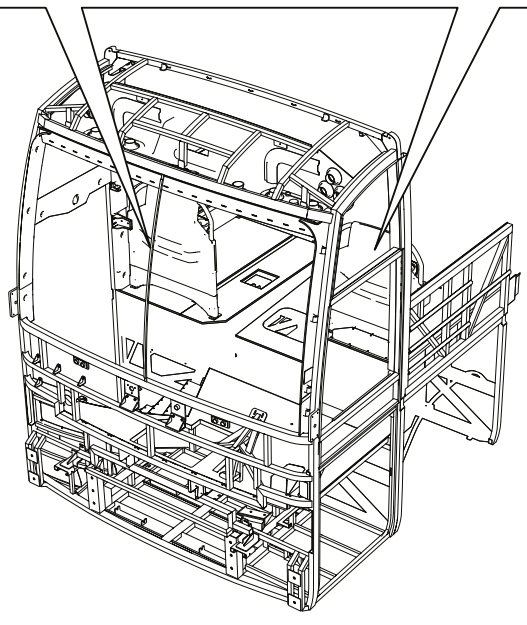

Removal Sequence:

6 > 3 >1
8 - 7 - 5 > 2

Note:
Assembly Sequence is the reverse order of Removal Sequence

PART LIST	NO
PARTITION	1
BRACKET	2
BRACKET	3
PLATE	4
SCREW	5
BOLT	6
BOLT	7
BOLT	8

10. EMERGENCY EXIT WINDOW

10.1. EXPLODED VIEW OF EMERGENCY EXIT WINDOW

Removal Sequence:

2 - 3 - 4 > 6 - 5 - 1

Note:
Assembly Sequence is the reverse order of Removal Sequence

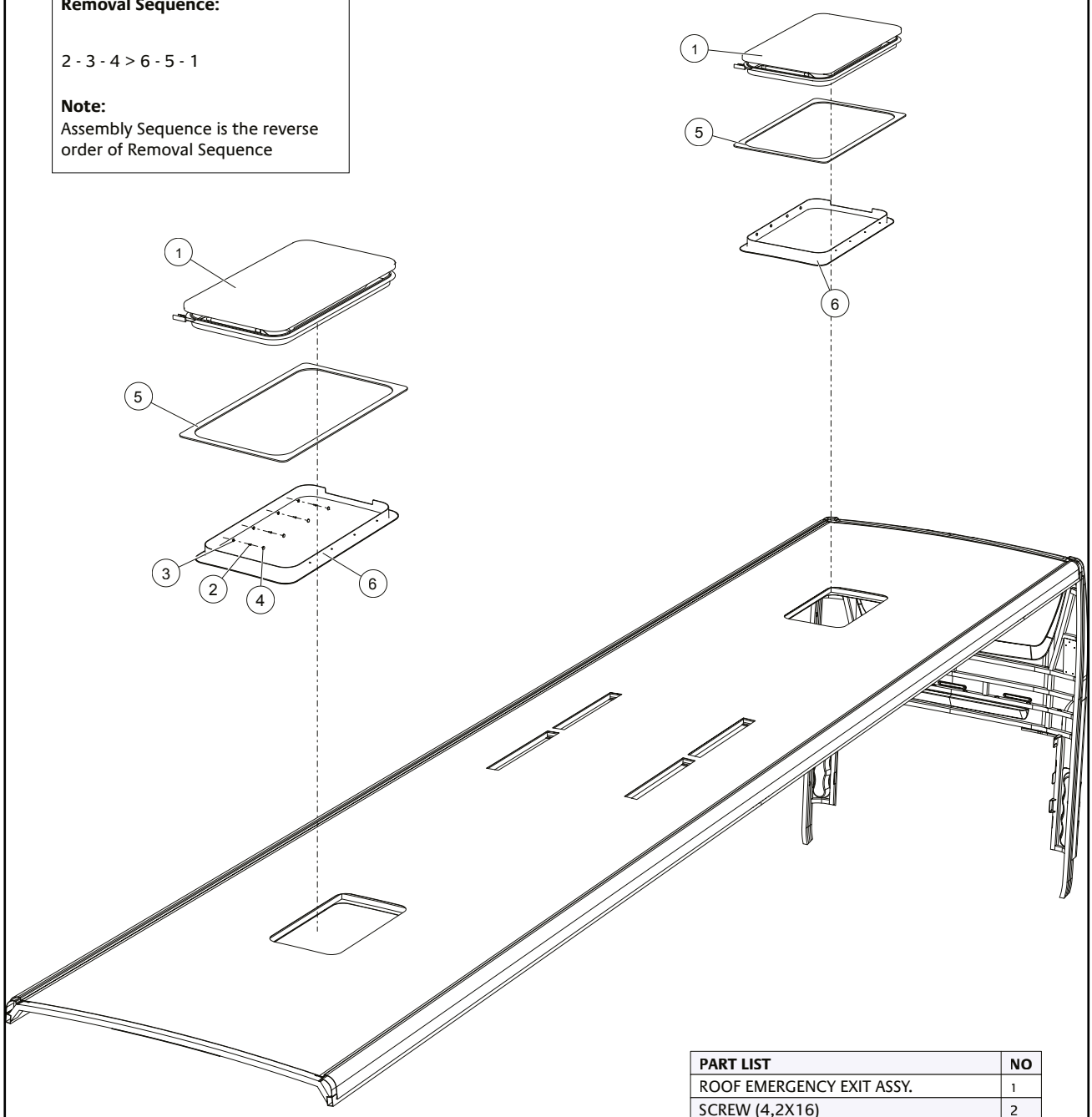

PART LIST	NO
ROOF EMERGENCY EXIT ASSY.	1
SCREW (4,2X16)	2
WASHER	3
SCREW COVER	4
ROOF EMERGENCY EXIT COVER,UPSIDE	5
ROOF EMERGENCY EXIT FRAME	6

10.2. REMOVAL OF EMERGENCY EXIT WINDOW

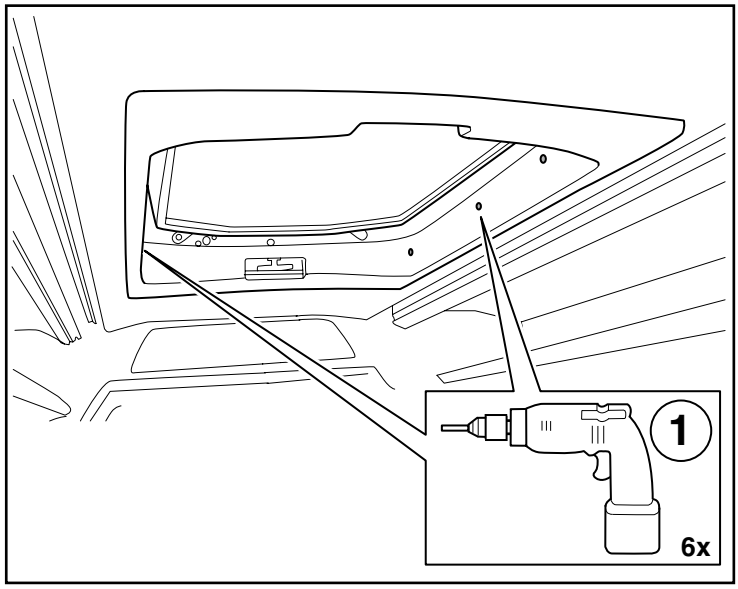

1. Loosen the screw of the cover of emergency exit door.

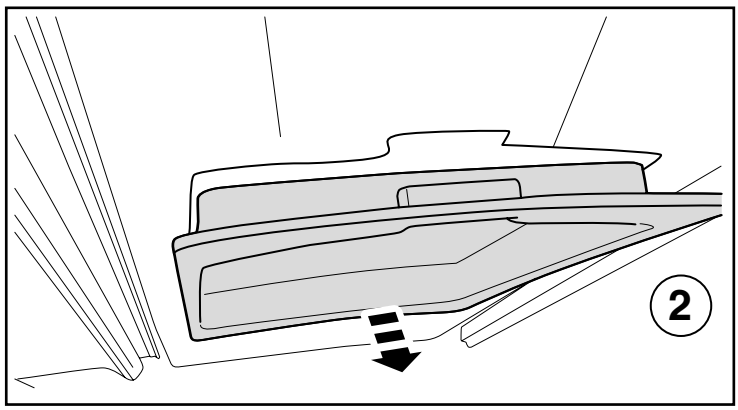

2. Remove cover of emergency exit door.

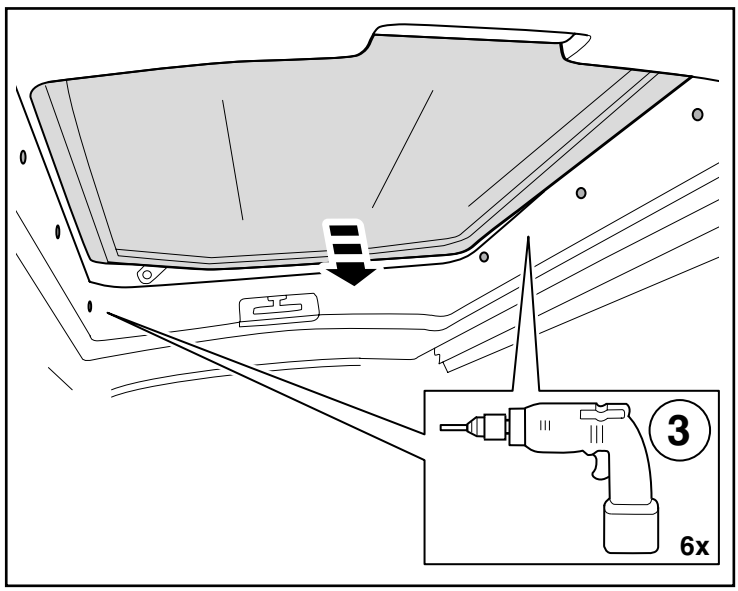

3. Loosen the screw of the frame and remove emergency exit door.

11. SIDE PANEL

11.1. EXPLODED VIEW OF SIDE PANEL

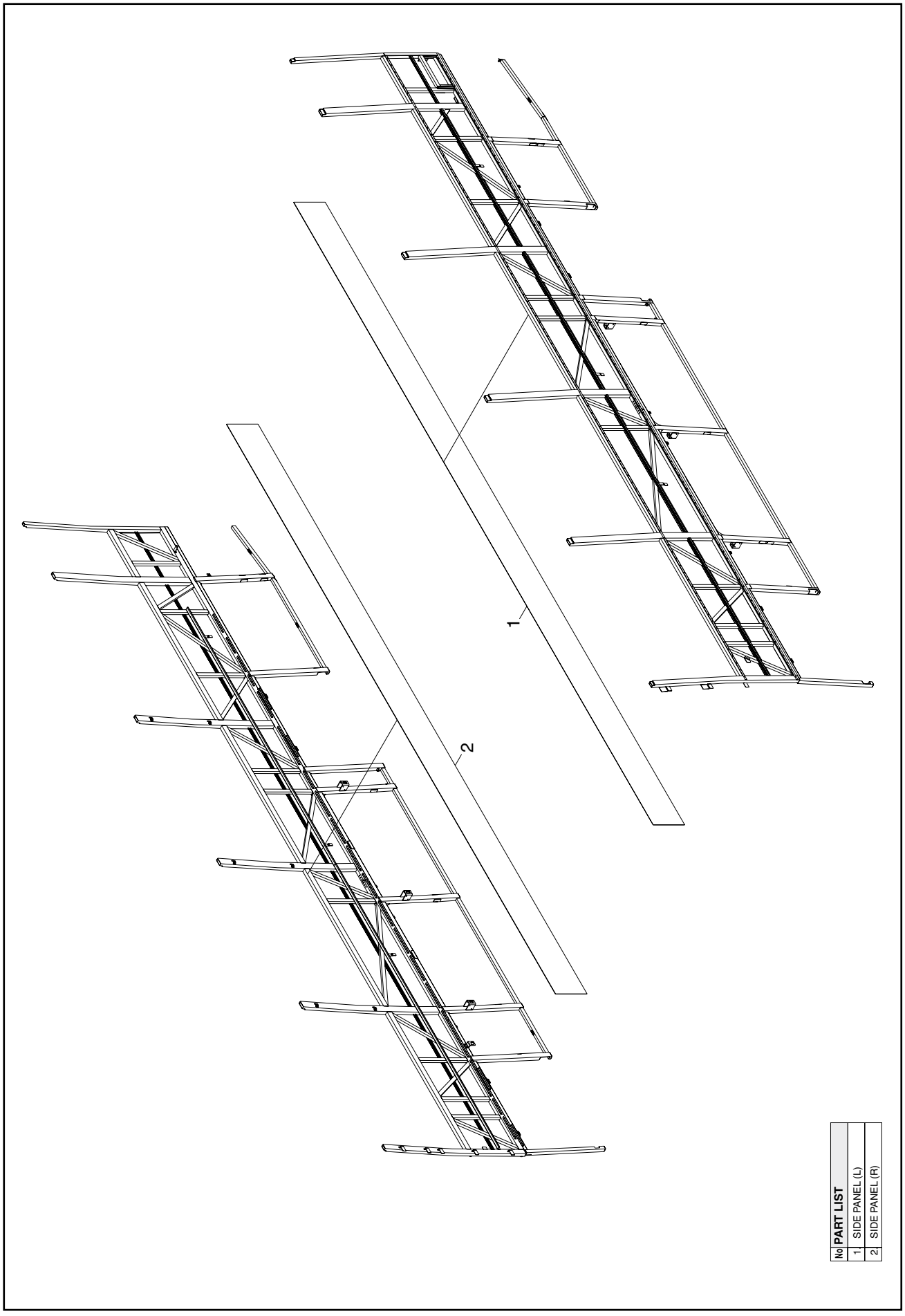

12. CURTAIN

12.1. EXPLODED VIEW OF CURTAIN

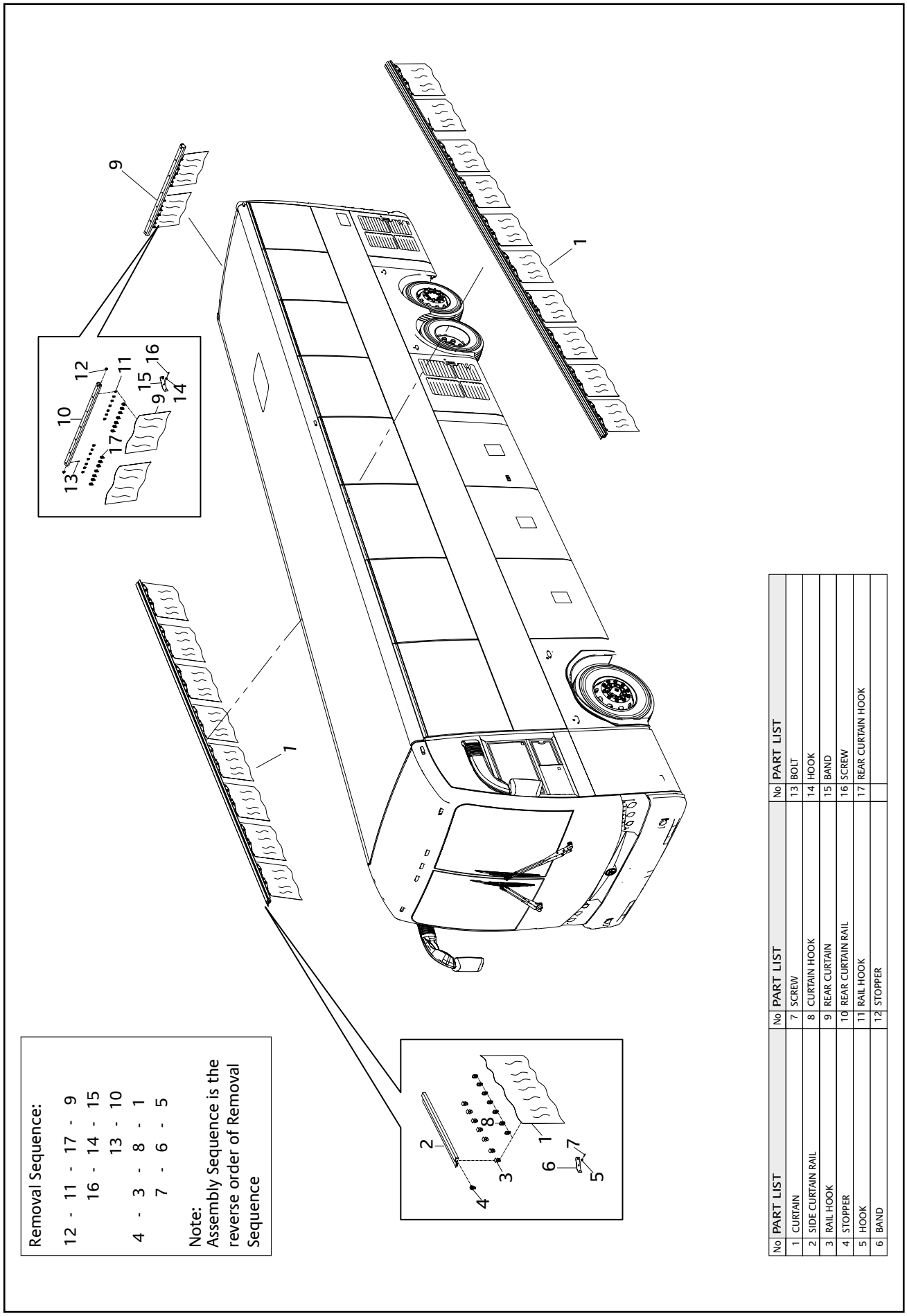

No	PART LIST	No	PART LIST	No	PART LIST
1	CURTAIN	7	SCREW	13	BOLT
2	SIDE CURTAIN RAIL	8	CURTAIN HOOK	14	HOOK
3	RAIL HOOK	9	REAR CURTAIN	15	BAND
4	STOPPER	10	REAR CURTAIN RAIL	16	SCREW
5	HOOK	11	RAIL HOOK	17	REAR CURTAIN HOOK
6	BAND	12	STOPPER		

13. INSIDE MIRROR

13.1. EXPLODED VIEW OF INSIDE MIRROR

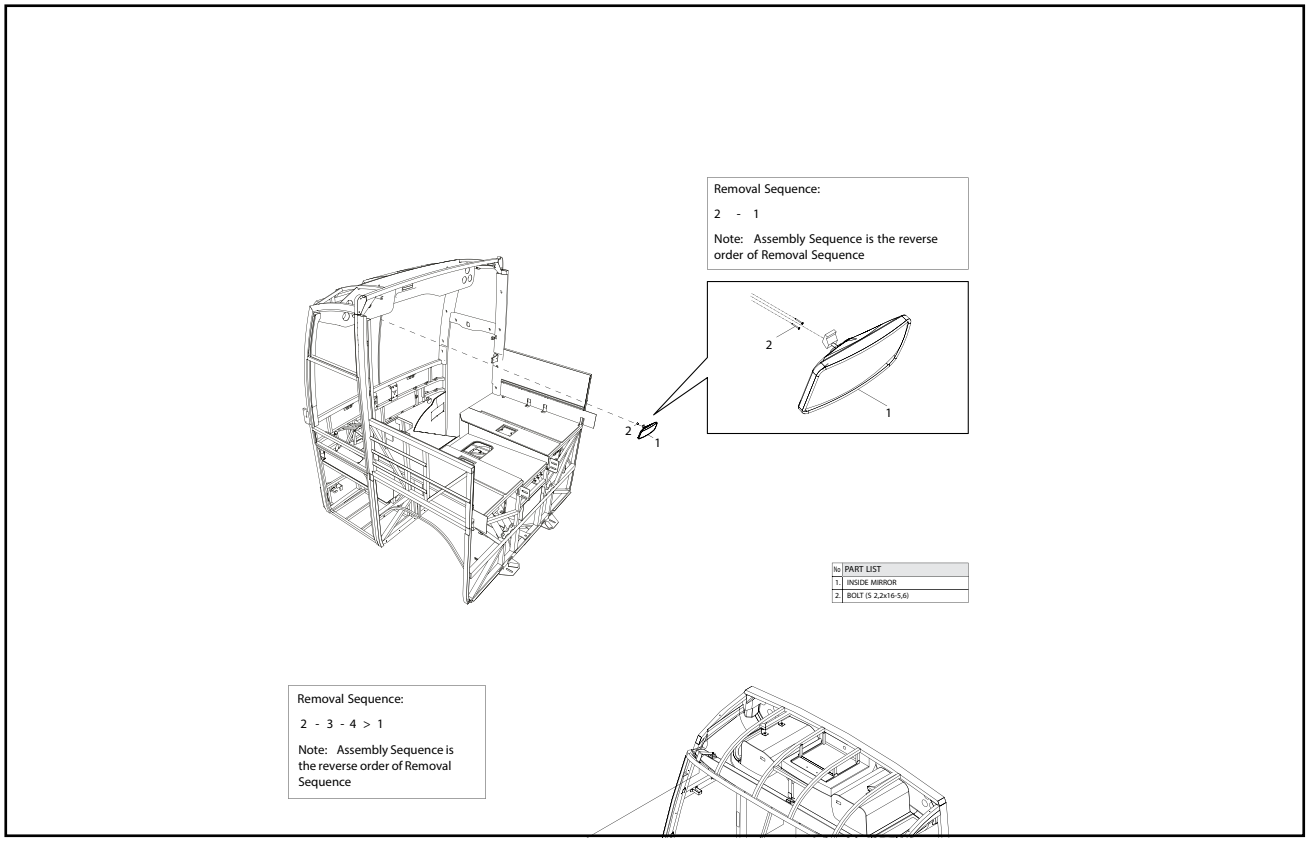

14. SUN VISOR

14.1. EXPLODED VIEW OF SUN VISOR

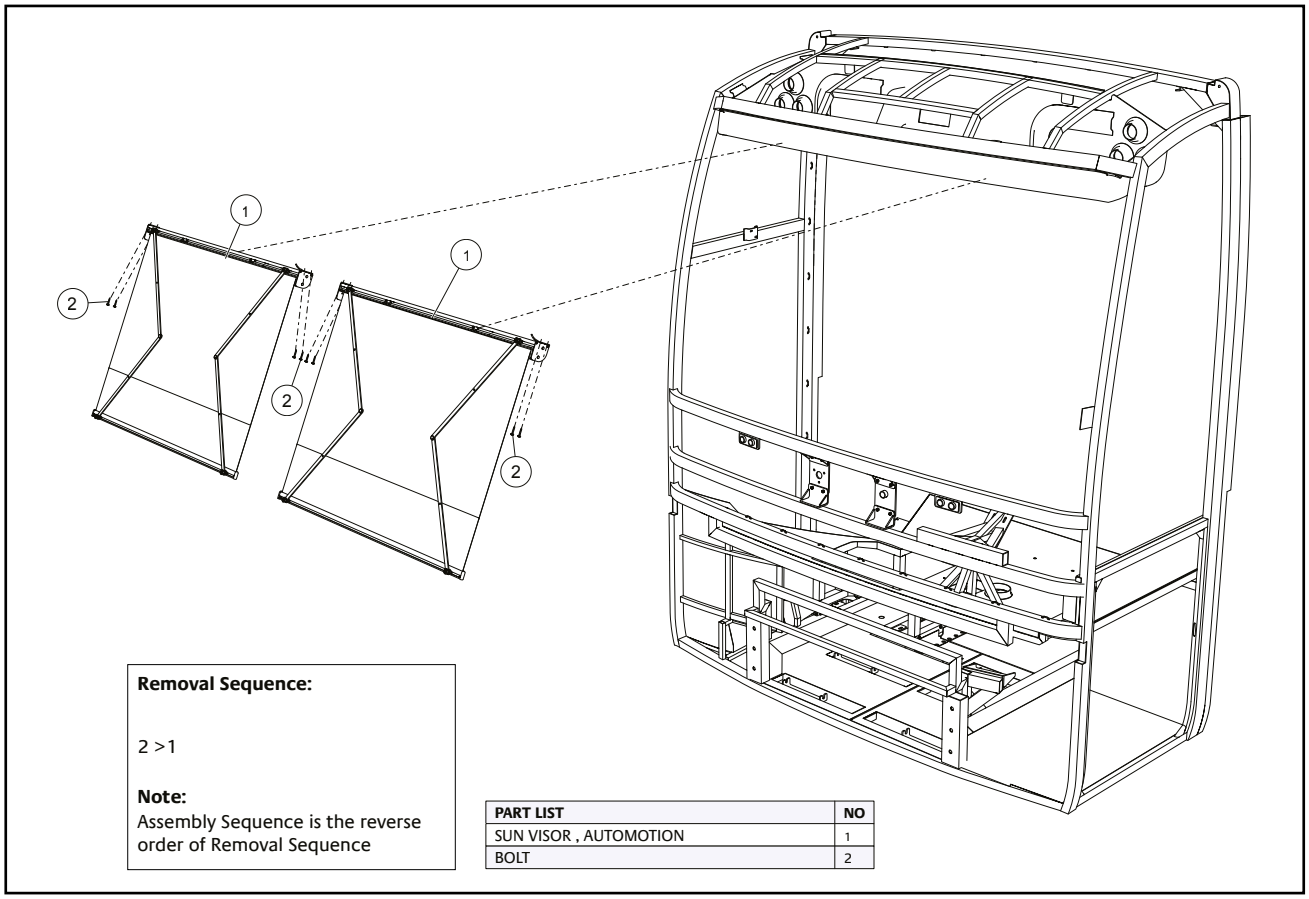

15. HANDLE

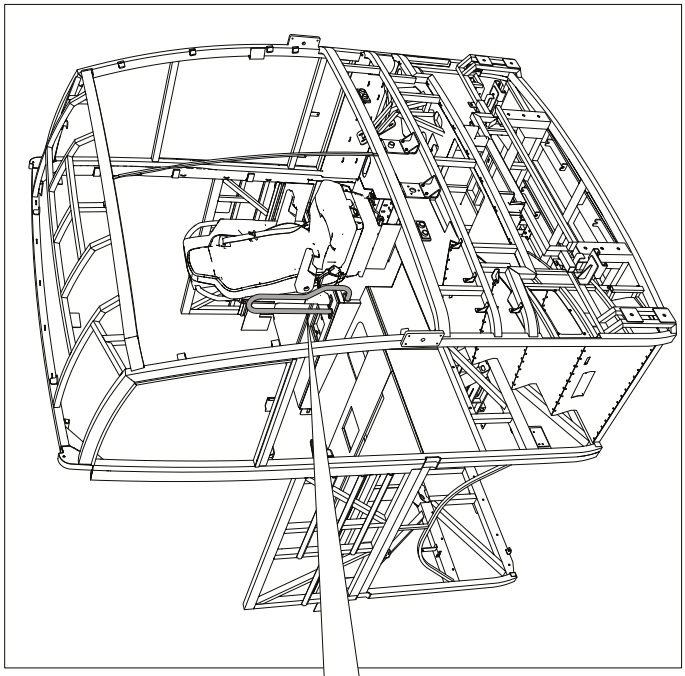

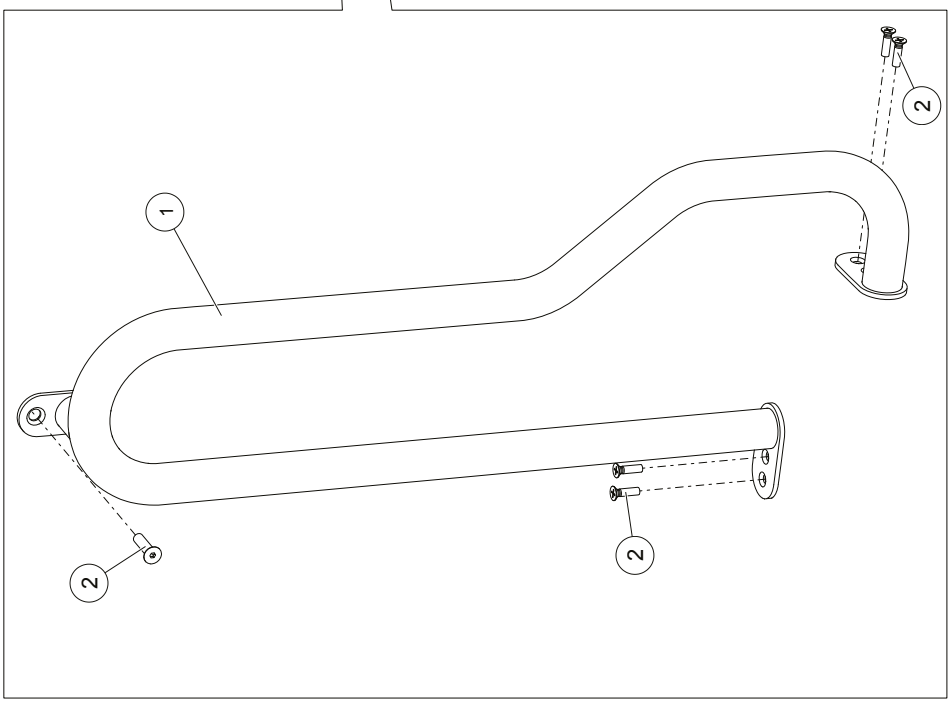

PART LIST	NO
HANDLE	1
BOLT	2

Removal Sequence:

2 >1

Note:
Assembly Sequence is the reverse order of Removal Sequence

16. LAVATORY

16.1. EXPLODED VIEW OF LAVATORY

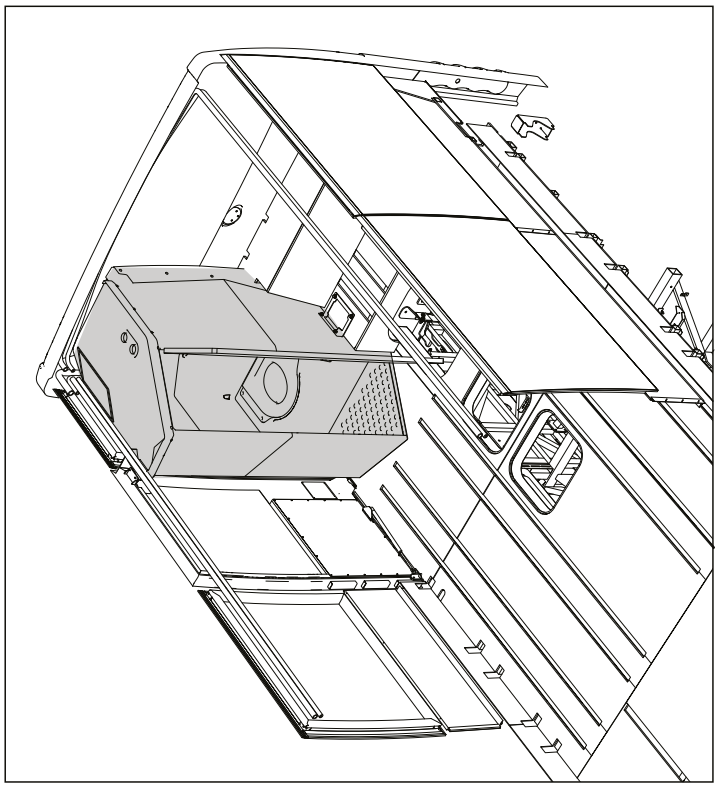

NO	PART LIST
1	TOILET , BRACKET
2	FLEXY HOSE
3	BRACKET
4	BOLT COVER (AKB AA13)
5	BOLT (M8x1.25x20)
6	BOLT (M6x1x16-8,8)
7	BOLT
8	NUT (M8X1.25)
9	WASHER,PLAIN (A 8.4)
10	WASHER
11	WASHER,SPRING (B 8)
12	SCREW (4,2X16)
13	WASHER

NO	PART LIST
14	SCREW COVER
15	T BOLT CLAMP
16	VALTERRA
17	TOILET
18	TOILET DOOR
19	CLOSET
20	TOILET SIDE COVER
21	TOILET SIDE COVER
22	VALVE
23	TOILET UPSIDE COVER
24	VENT

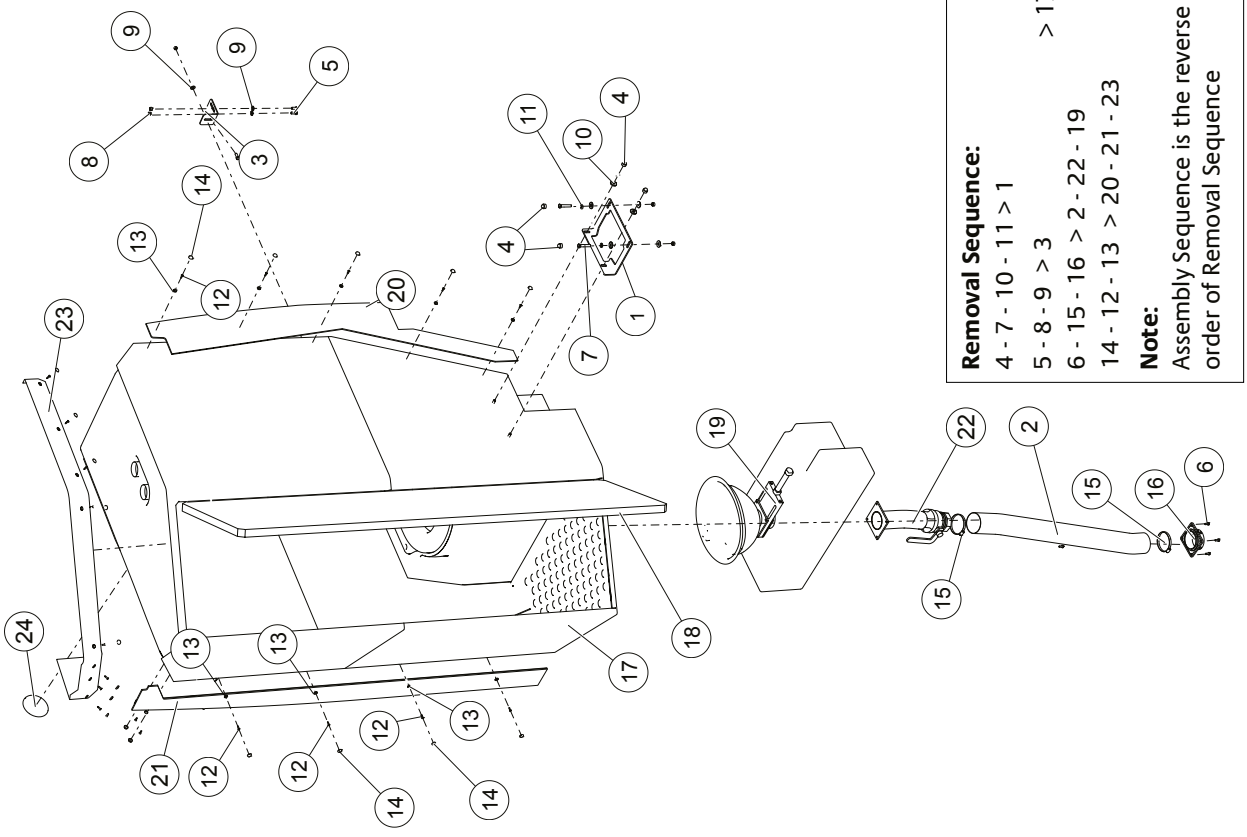

Removal Sequence:
4 - 7 - 10 - 11 > 1
5 - 8 - 9 > 3 > 17
6 - 15 - 16 > 2 - 22 - 19
14 - 12 - 13 > 20 - 21 - 23

Note:
Assembly Sequence is the reverse order of Removal Sequence

24 EXTERIOR TRIMMING

Rev.00 / 25.03.14

1. TOOLS 2

2. STRUCTURE AND OPERATION 3

2.1. Jacking Points 3

2.2. Removing Spare Wheel 4

2.3. Removing Wheels 6

2.4. Front Tire 11

2.5. Rear Tire 11

2.6. Front Mud Guard 12

2.7.Rear Mud Guard 12

2.8. Windscreen Wiper 13

2.8.1 Disassembly Of The Windscreen Wiper 14

2.9. Water Tank 15

2.10. Front Bumper 17

2.11. Rear Bumper 18

2.12. Rear Hook 19

2.13. Side Panels 20

3. TIGHTENING TORQUES LIST 21

4. TROUBLESHOOTING 22

GENERAL

- If work is performed by people who do not have the necessary training to carry out the work or if this information is handled carelessly or totally ignored, this may result in severe injury and/or death. Inaddition, serious damage to the vehicle may occur.
- Always read the safety instructions in full before starting certain operations. The safety instructions stipulate which aspects must be considered to achieve maximum safety. The information is given that is very important for health and safety.
- Always work in adequately ventilated rooms with sufficient lighting, free from dirt and clutter. Never leave tools or parts lying around, keep away from (high-) voltage sources that present a risk of short-circuiting. Always wear protective clothing. Do not wear any damaged or loose-fitting clothing and remove jewelry before starting the work. In case of long hair use hairnet.

1. TOOLS

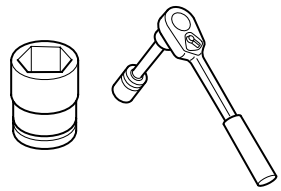 Impact Socket	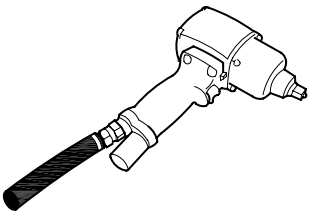 Impact Wrenches	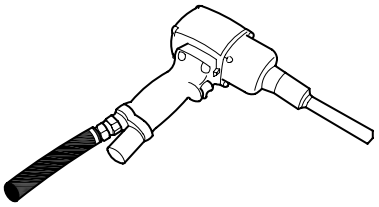 Drill
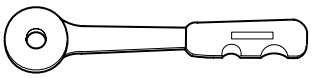 Drive Tools	 Sonic	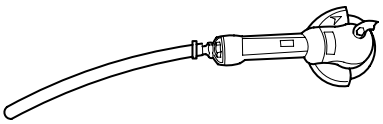 Grinders
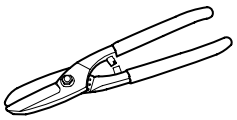 Metal Sheet Scissors	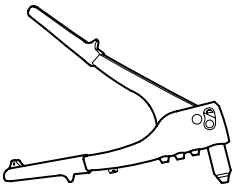 Rivet Machine	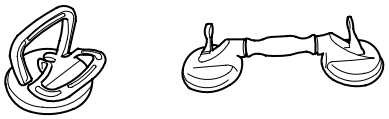 Rubber Suction
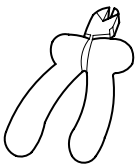 Stripping Plier	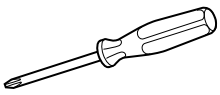 Screw Driver	 Adhesive Material Cup

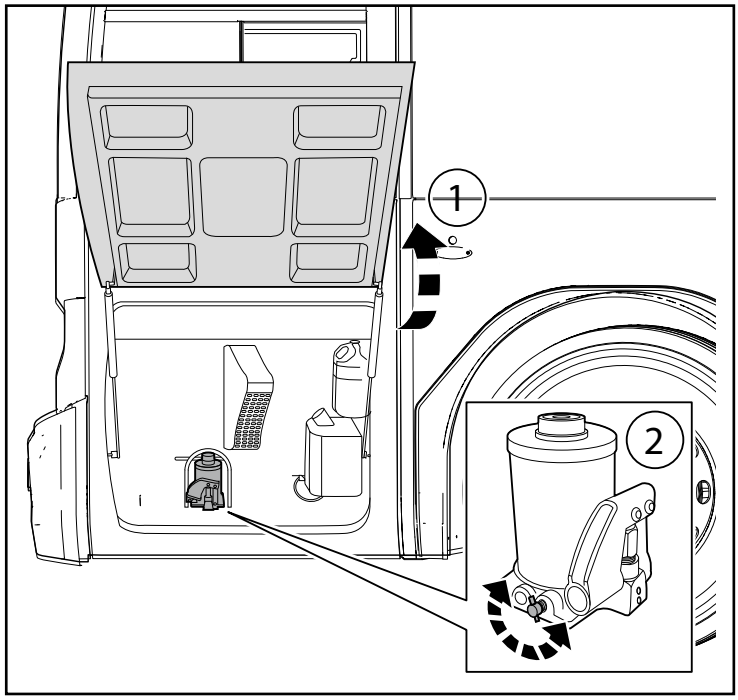

2. STRUCTURE AND OPERATION

2.1. JACKING POINTS

1. Open the front lid.
2. To realease the jack rotate the screw anti-clockwise and push the jack piston downwards. After removing jack, rotate the screw clockwise to tighten by using jack lever.

CAUTION

Never jack up the vehicle before checking that the jack screw is well tightened.

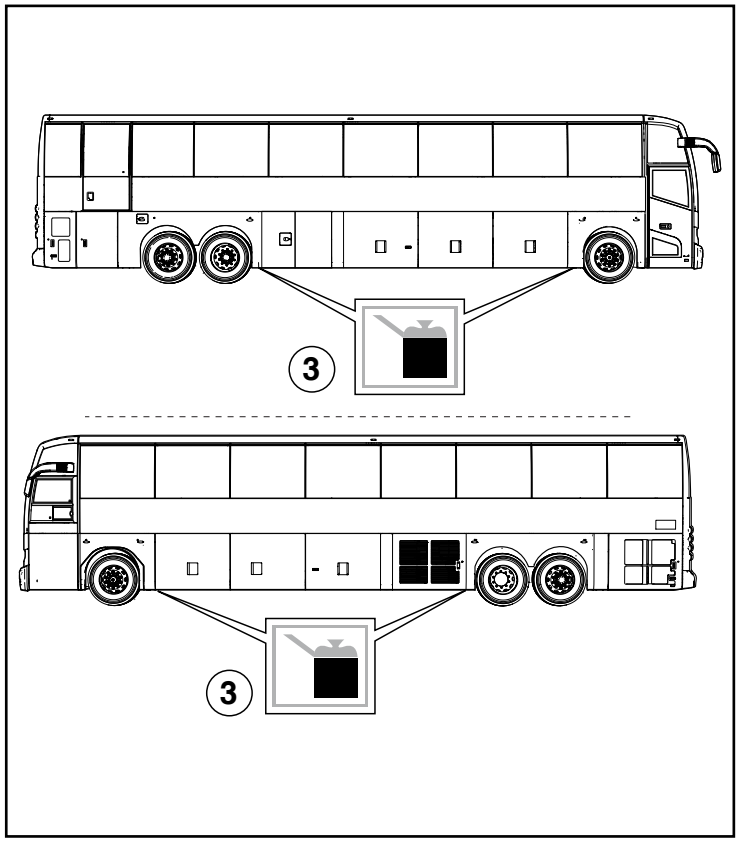

3. Always use the jack up points indicated on vehicle to jack up vehicle.

CAUTION

- Applying the jack on points other than specified as jack up points may damage the vehicle body.
- Check that all passengers are evacuated before the vehicle is jacked up.
- Never remove wheel nuts before the vehicle is lifted.

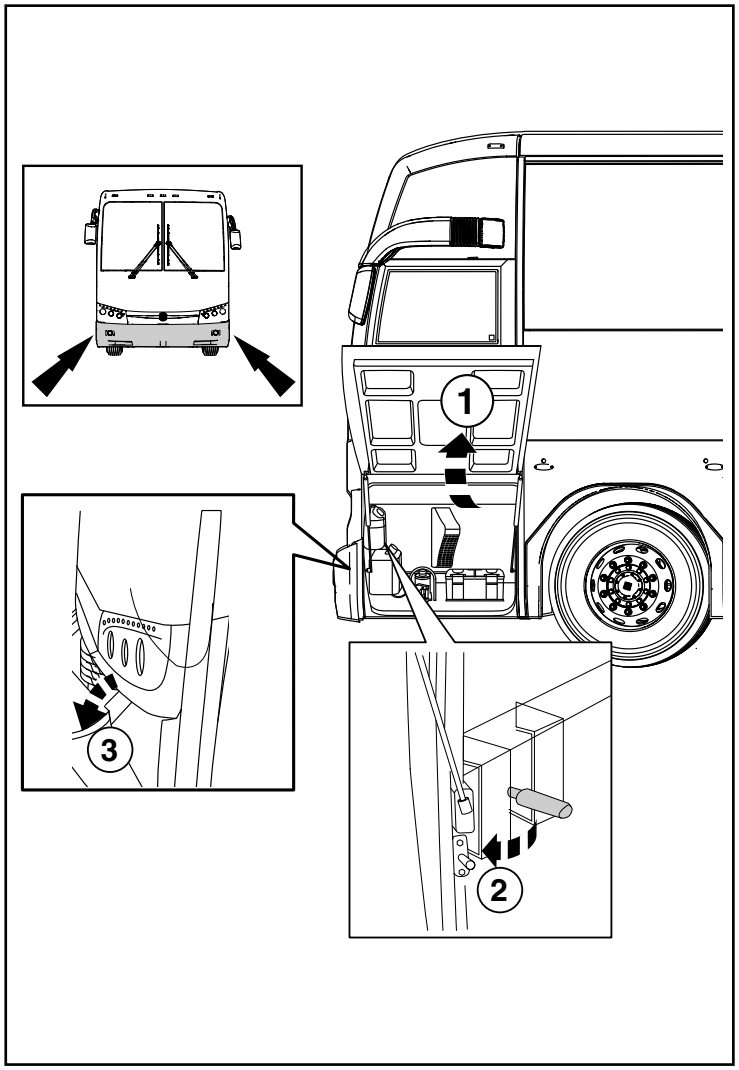

2.2. REMOVING SPARE WHEEL

1. Open the front lid.
2. Pull handle to release front bumper.
3. Lower front bumper

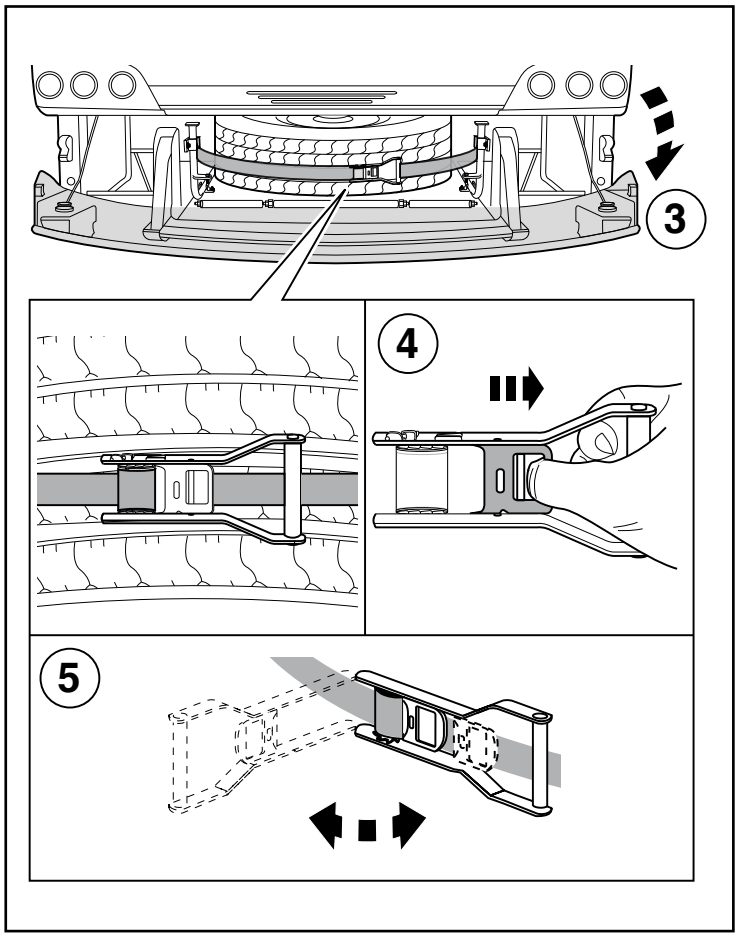

4. Spare tire belt has a locking mechanism. Hold the latch and pull in the direction of the arrow, as shown in the figure, to release the locking mechanism.
5. Moving the handle to the left and right several times loosens the belt.

2.2. REMOVING SPARE WHEEL

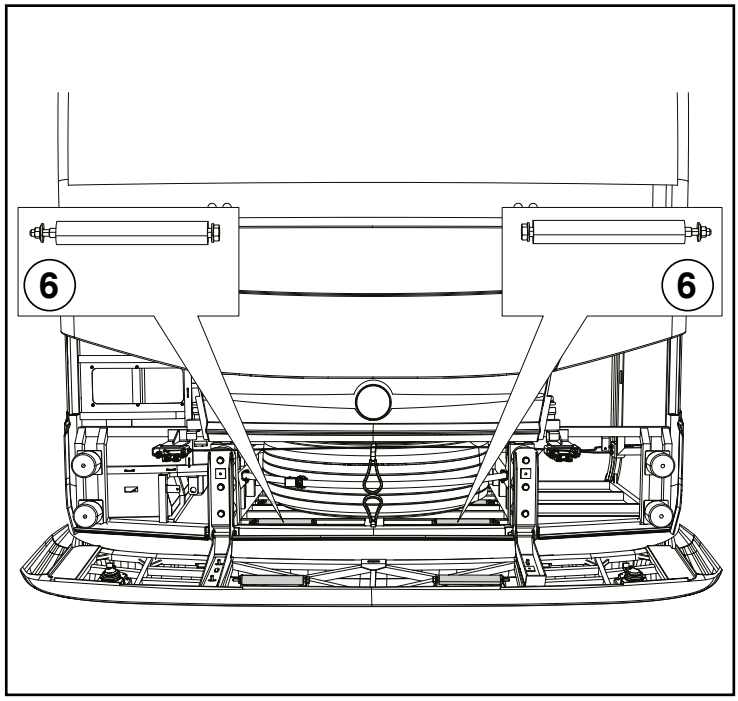

6. Auxiliary parts (two pipes, a rod, two screws) are located behind front bumper to land spare tire easily. The two pipes of the landing mechanism are located one to the left and one to the right of the spare tire. To release, hold the pipe and pull in the direction of the arrow.

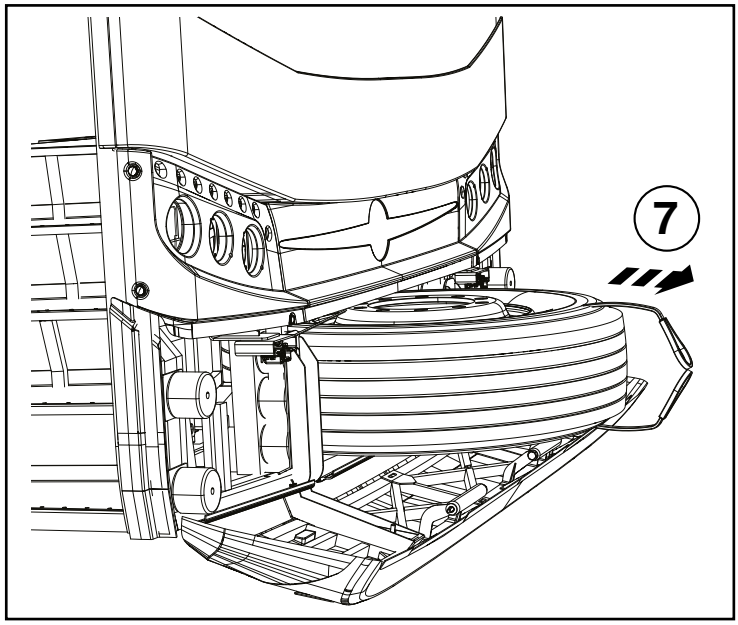

7. The pipe at the right hand side of the spare tire must be hooked at the left hand side of the tire. Pipe at the left hand side of the spare tire must be hooked at the right hand side of the tire.

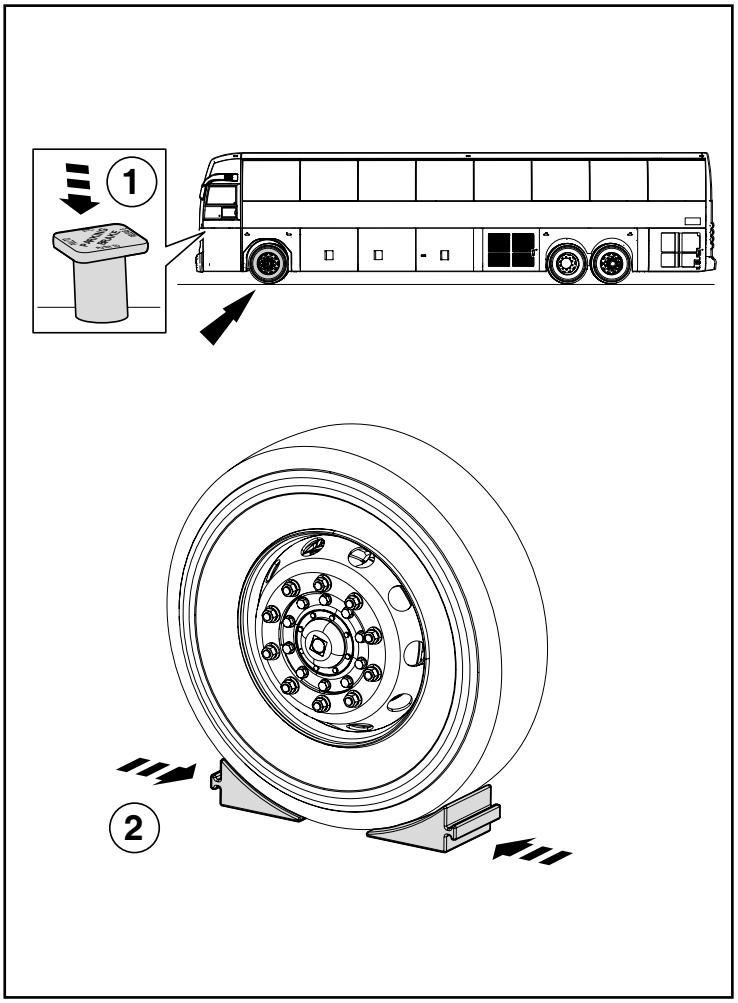

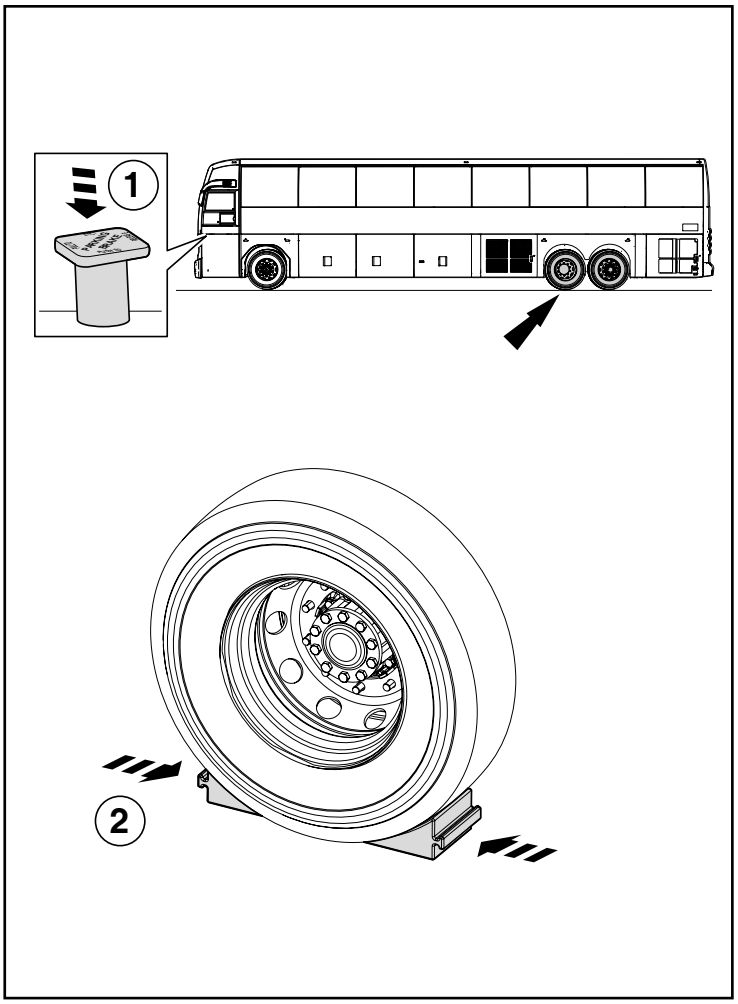

2.3. REMOVING WHEELS

CAUTION

Use gloves during removal or installation of tires to prevent injury to your hands.

1. Park the vehicle on level place and apply firmly the parking brake.
2. Apply chocks to the tires that will not be removed.

Note:

- If you will remove front tires apply chocks to the rear tires
- If you will remove rear tires apply chocks to the front tires.

WARNING

- Chock the wheels securely so the vehicle does not move.
- Do not remove the chocks until the entire operation is completed.
- Supporting a vehcile on a jack only is extremely dangerous, so always support the right and left frames on rigid racks.
- Leave the jack and rigid racks in place until the entire operation is completed.
- Never remove jack and rigid rack during the operation.
- Never jack up on soft ground.
- Never use undue force to remove the tires. This could cause the jack to slip, resulting in the vehicle falling.

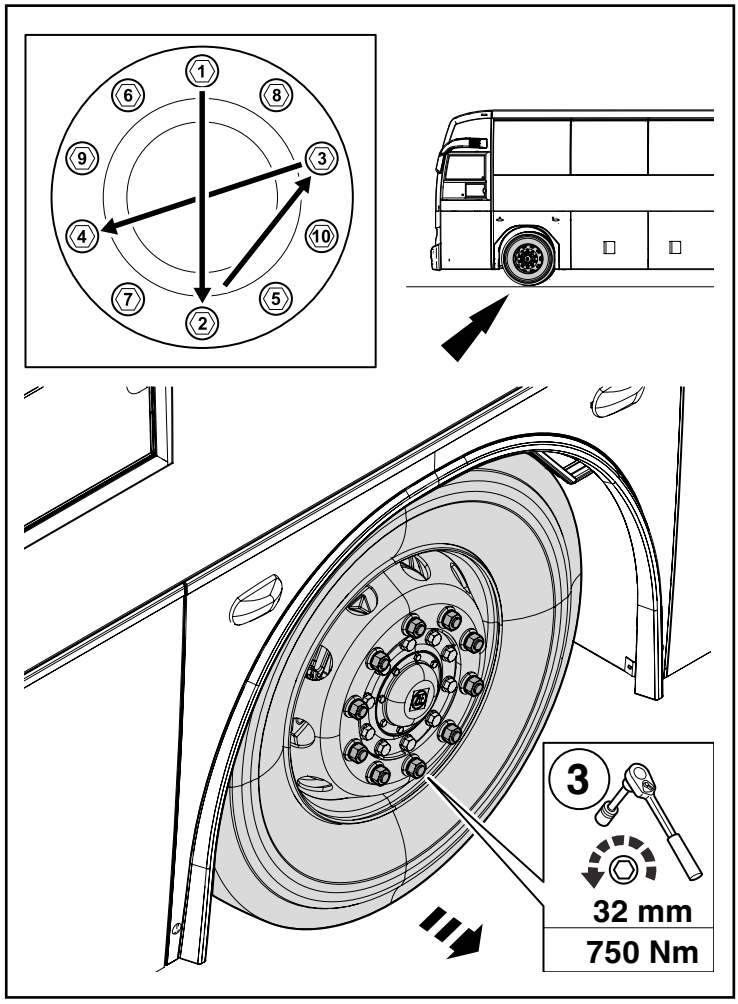

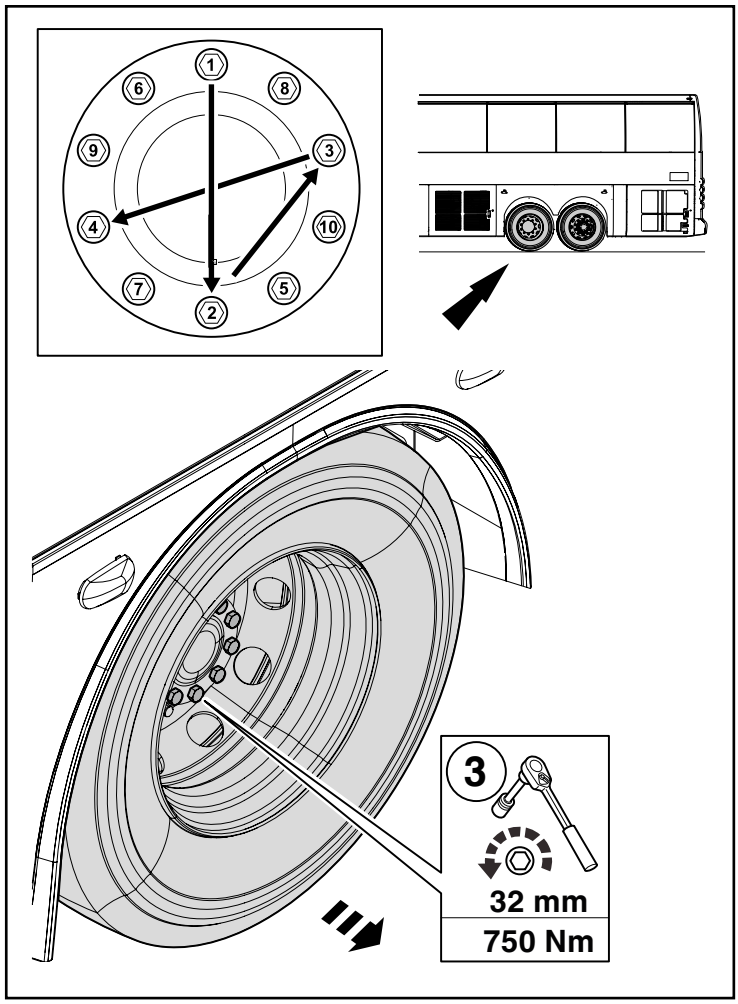

2.3. REMOVING WHEELS

WARNING

Set the socket wrench fully over the wheel nut, otherwise the wrench could disengage from the nut.

CAUTION

- Always perform the following procedure on flat surface!
- Check tire pressure.

3. Loosen the wheel nuts in a crosswise pattern using a socket wrench, but do not remove the wheel before the vehicle is jacked up. Take care not to damage the wheel stud threads.

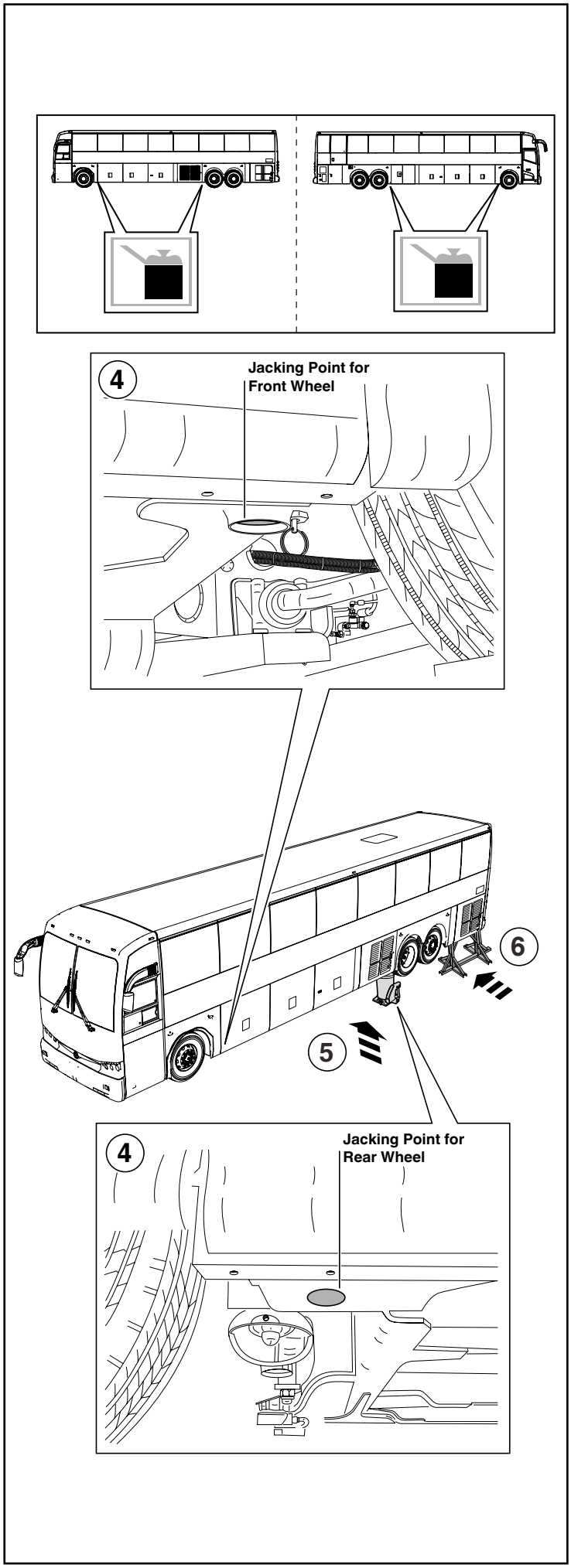

2.3. REMOVING WHEELS

4. Place the jack underneath the specified jacking point on the wheel to be changed, ensuring that the jack cannot slip.

CAUTION

- Supporting ground must be hard enough to support vehicle. Do not apply jacks to other points on the vehicle, it may cause damage to the vehicle or result in the vehicle falling.
- Jacking points are clearly marked on the front and rear of vehicle.

5. Raise the axle until the defective wheel lifts off the ground.
6. Support with rigid rack.

2.3. REMOVING WHEELS

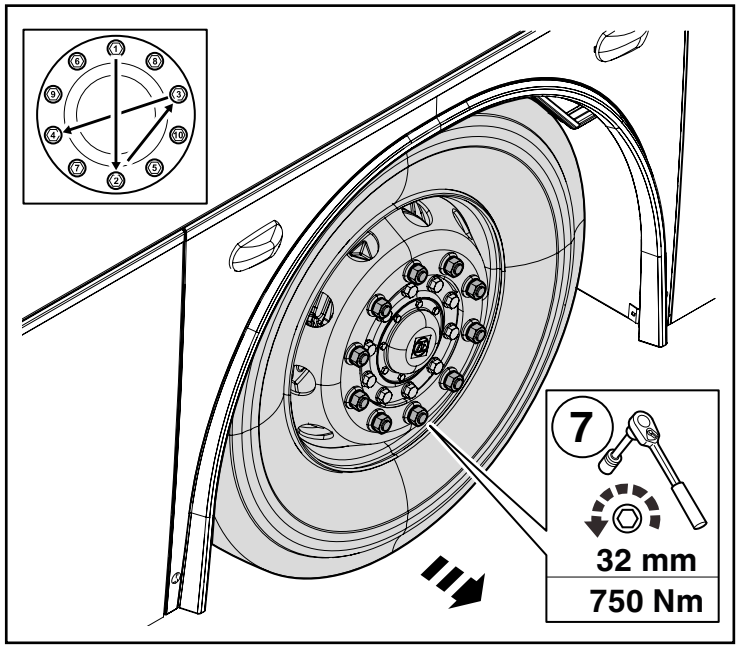

7. Remove the wheel nuts in a crosswise pattern using a socket wrench and take off the wheel. Take care not to damage the wheel stud threads.

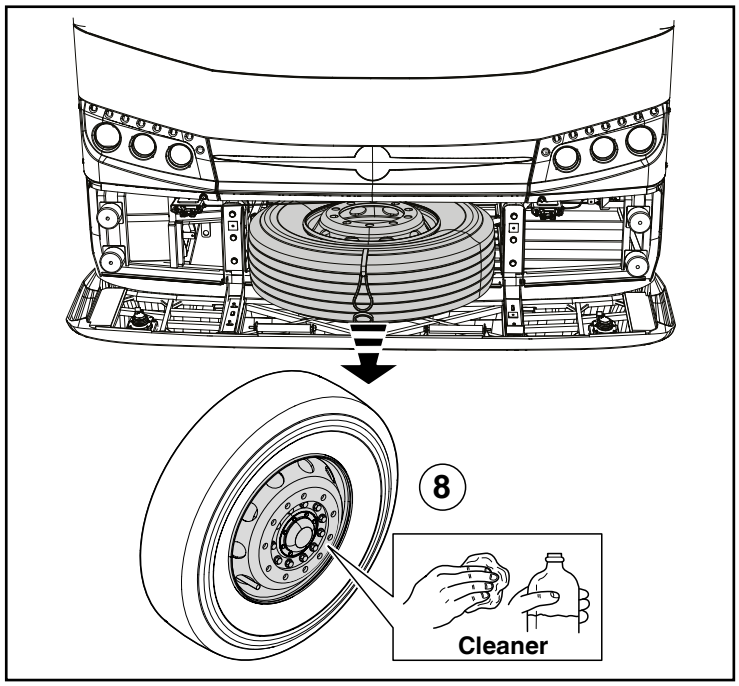

8. Before fitting the spare wheel (see 2.2. Removing Spare Wheel): Clean the contact surface on the rim and on the axle wheel section.

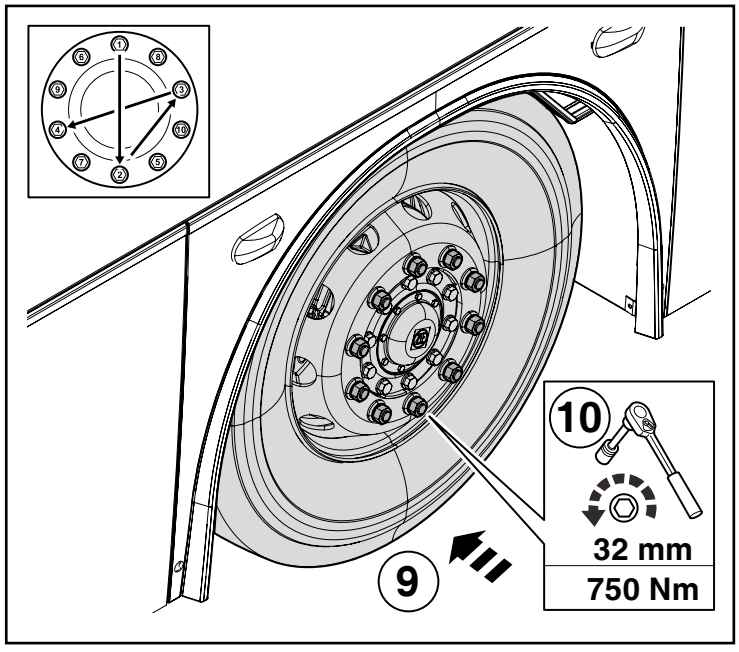

9. Fit the spare wheel, taking care not to damage the wheel stud threads
10. Screw on the wheel nuts and finger - tighten them then in a crosswise pattern using a socket wrench.

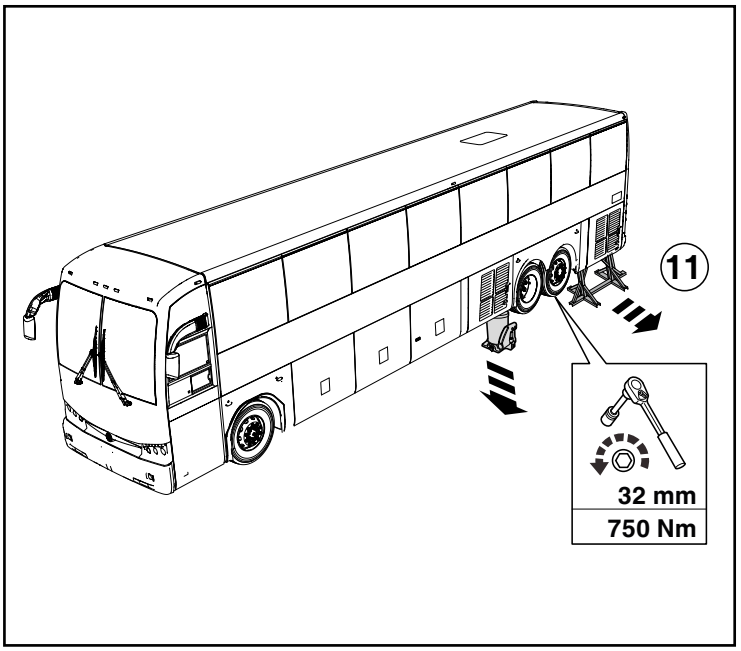

2.3. REMOVING WHEELS

11. Once the axle has been lowered, fully tighten the wheel nuts to mentioned torque tightening in a crosswise pattern – one after the other.
12. Retighten the wheel nuts after approximately 30 miles; Regularly check that the wheel nuts are firmly seated and tightened to the correct torques. Adjust accordingly (see 3. Tightening Torques List).

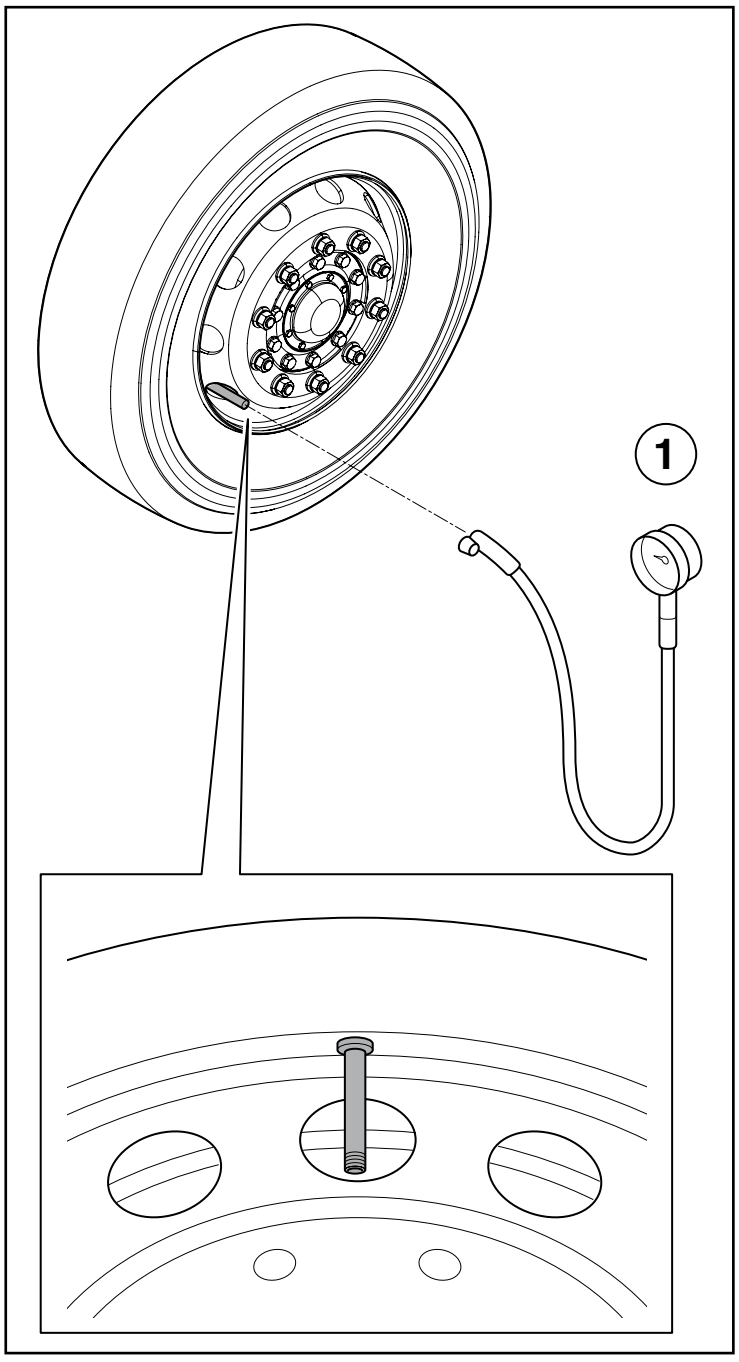

Tire conditions and inflation pressure

1. Check that the tires (incl. spare wheel) are inflated to the correct pressure.
2. Check the condition of the tires, tread wear and depth of tread (comply with country requirements).

CAUTION

Reguarly check wheel nuts and tire pressure and adjust accordingly.

CAUTION

Danger of accidents!

- The vehicle's road speed, safety and handling as well as the life expectancy of the tires depend on the correct tire inflation pressure.
- Inadequate tire inflation pressure reduces driving safety and means the tyre reaches the end of its service life more quickly.
- Tire inflation pressures may rise by as much as 1 bar if the tires have become hot after the vehicle has been driven at speed. Never deflate tires under these circumstances.

2.4. FRONT TIRE

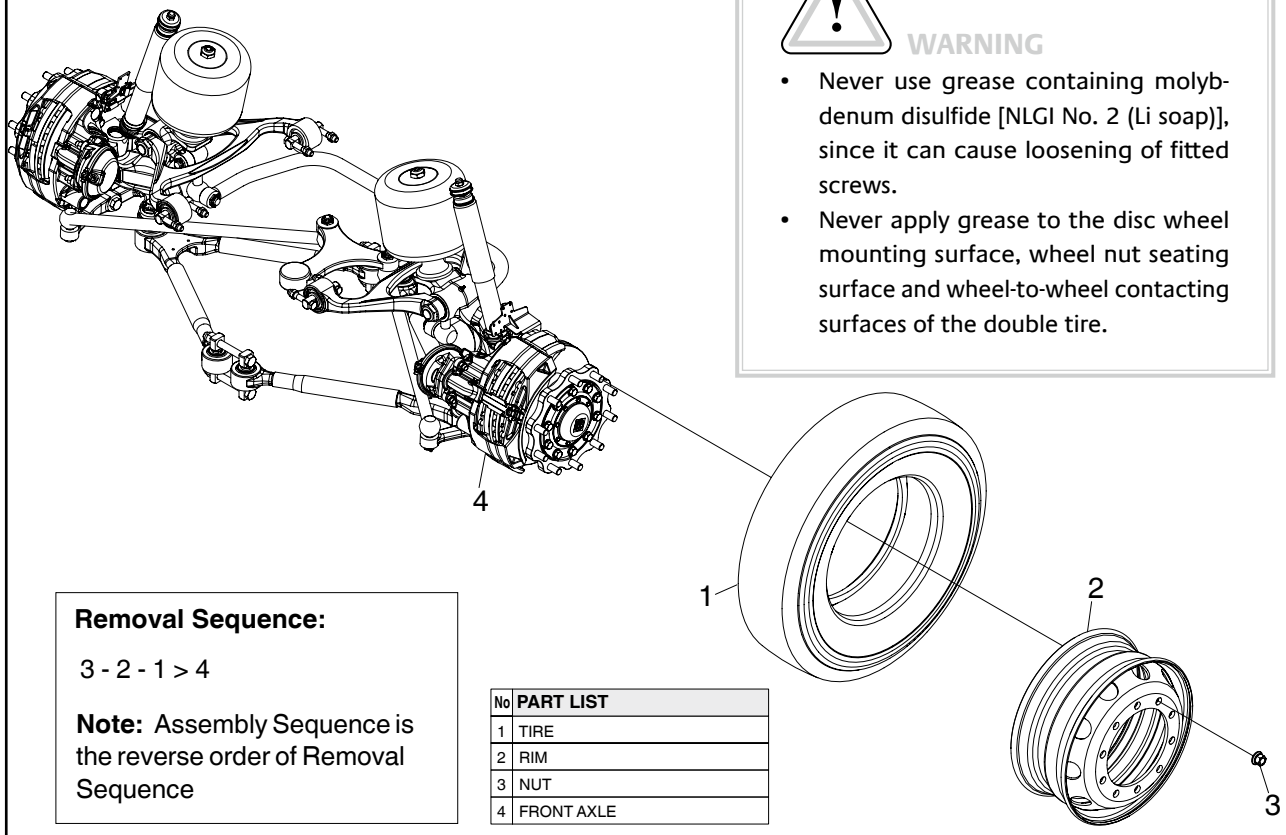

WARNING

- Never use grease containing molybdenum disulfide [NLGI No. 2 (Li soap)], since it can cause loosening of fitted screws.
- Never apply grease to the disc wheel mounting surface, wheel nut seating surface and wheel-to-wheel contacting surfaces of the double tire.

Removal Sequence:

3 - 2 - 1 > 4

Note: Assembly Sequence is the reverse order of Removal Sequence

No	PART LIST
1	TIRE
2	RIM
3	NUT
4	FRONT AXLE

2.5. REAR TIRE

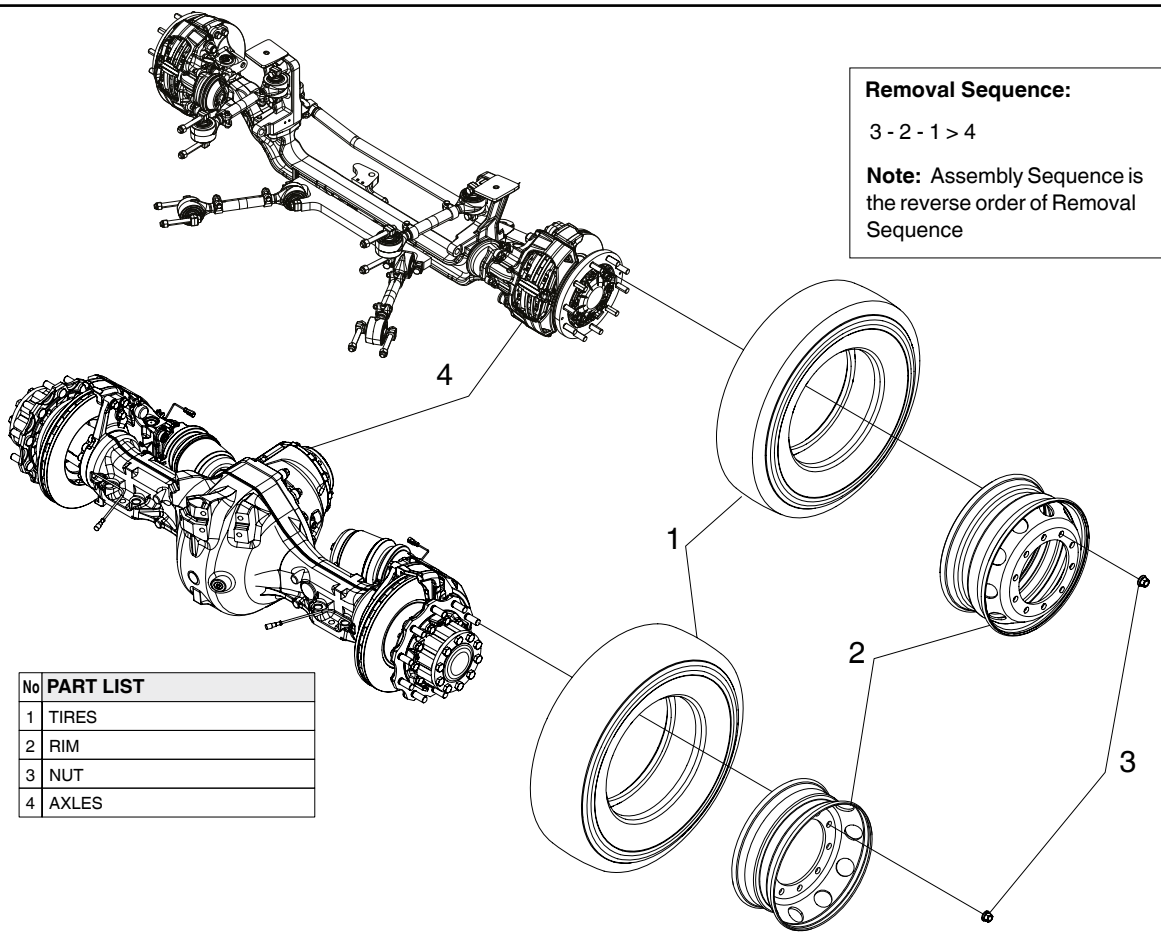

Removal Sequence:

3 - 2 - 1 > 4

Note: Assembly Sequence is the reverse order of Removal Sequence

No	PART LIST
1	TIRES
2	RIM
3	NUT
4	AXLES

2.6. FRONT MUD GUARD

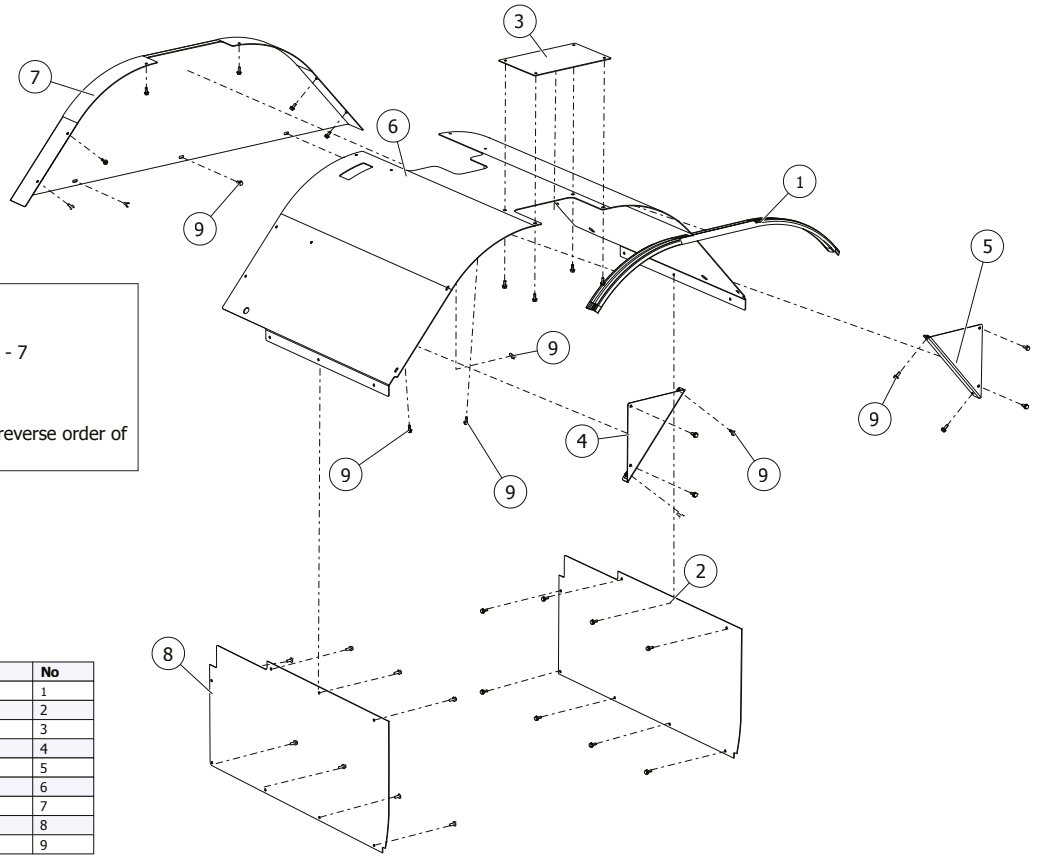

RemovalSequence:

9 - 4 - 1 - 3 - 2- 8 > 6 - 7

Note:
Assembly Sequence is the reverse order of Removal Sequence

Part List	No
ROVING	1
MUDGUARD	2
MUDGUARD	3
MUDGUARD	4
MUDGUARD	5
MUDGUARD	6
MUDGUARD	7
MUDGUARD	8
BOLT FLANGE	9

2.7.REAR MUD GUARD

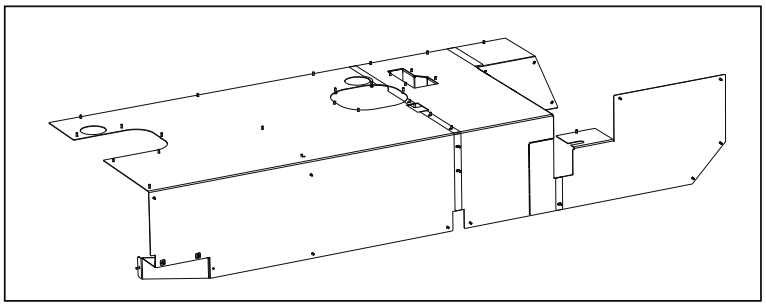

RemovalSequence:

9-3-2-5-6-8-7>1

Note:
Assembly Sequence is the reverse order of Removal Sequence

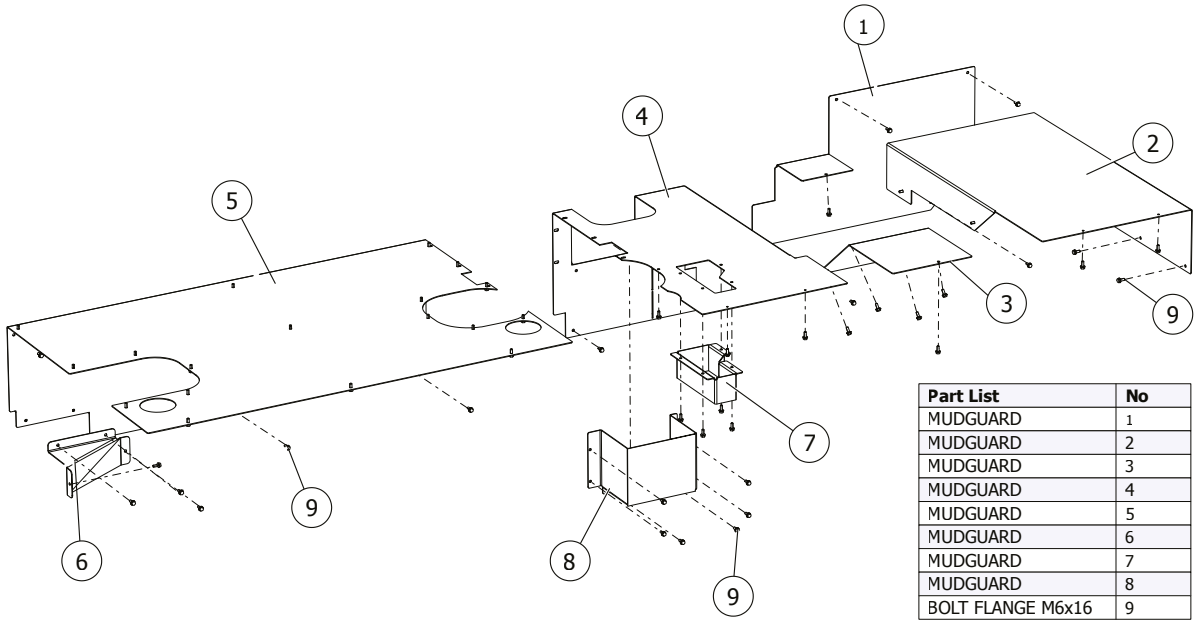

Part List	No
MUDGUARD	1
MUDGUARD	2
MUDGUARD	3
MUDGUARD	4
MUDGUARD	5
MUDGUARD	6
MUDGUARD	7
MUDGUARD	8
BOLT FLANGE M6x16	9

2.8. WINDSCREEN WIPER

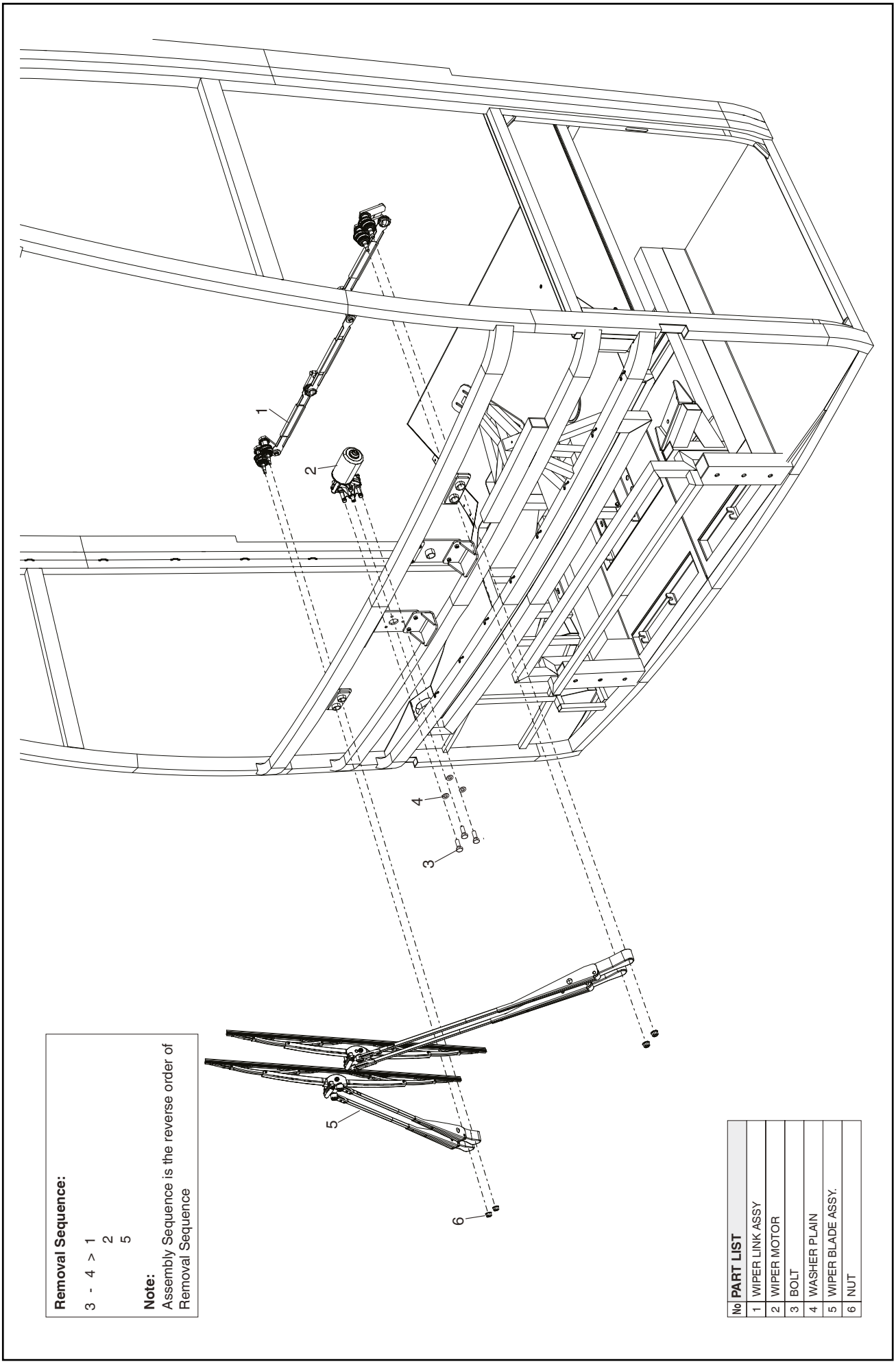

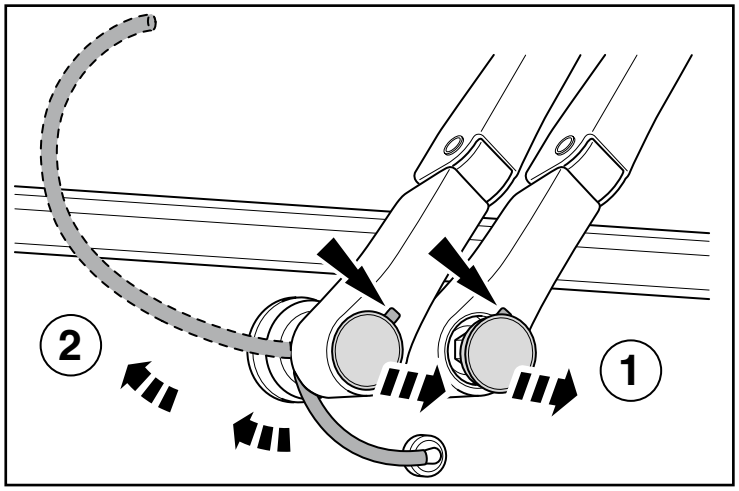

2.8.1 DISASSEMBLY OF THE WINDSCREEN WIPER

1. Remove the cover.
2. Remove hose and hoist it.

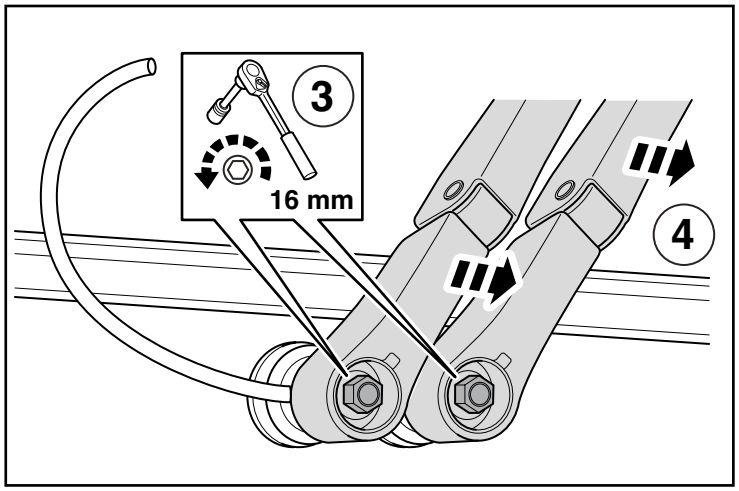

3. Unscrew the nuts.
4. Remove the wiper arms.

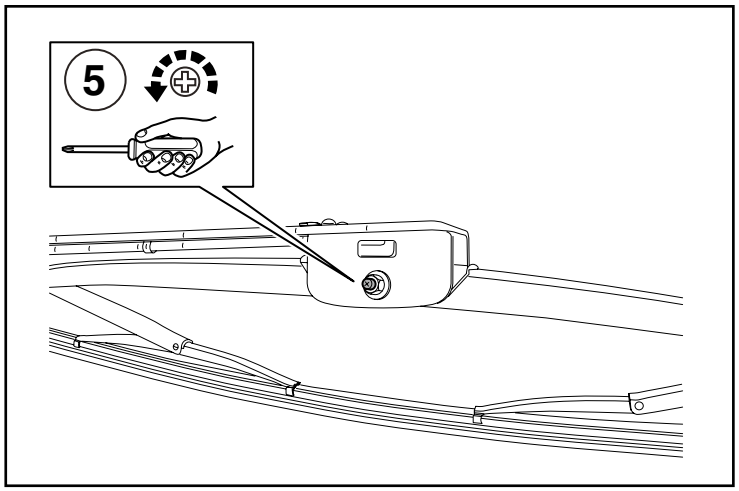

5. Unscrew the screw.

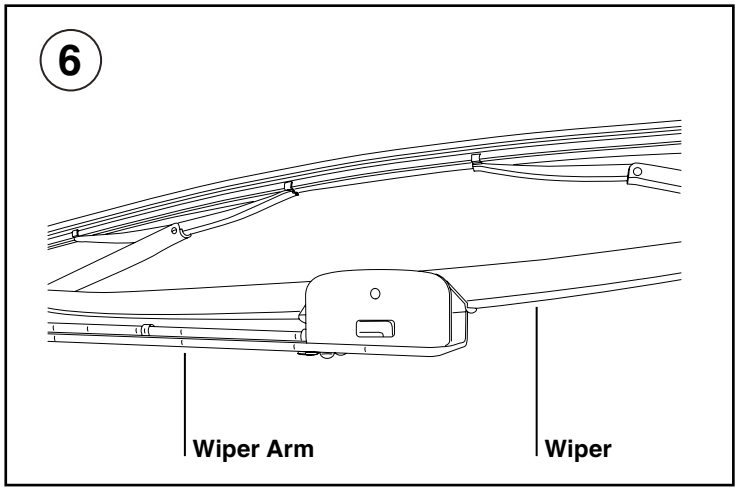

6. Remove the wiper blade assembly from the wiper arm.

2.9. WATER TANK

Removal Sequence:

2 - 3 - 4 - 5 - 6 - 7 > 1

Note:
Assembly Sequence is the reverse order of Removal Sequence

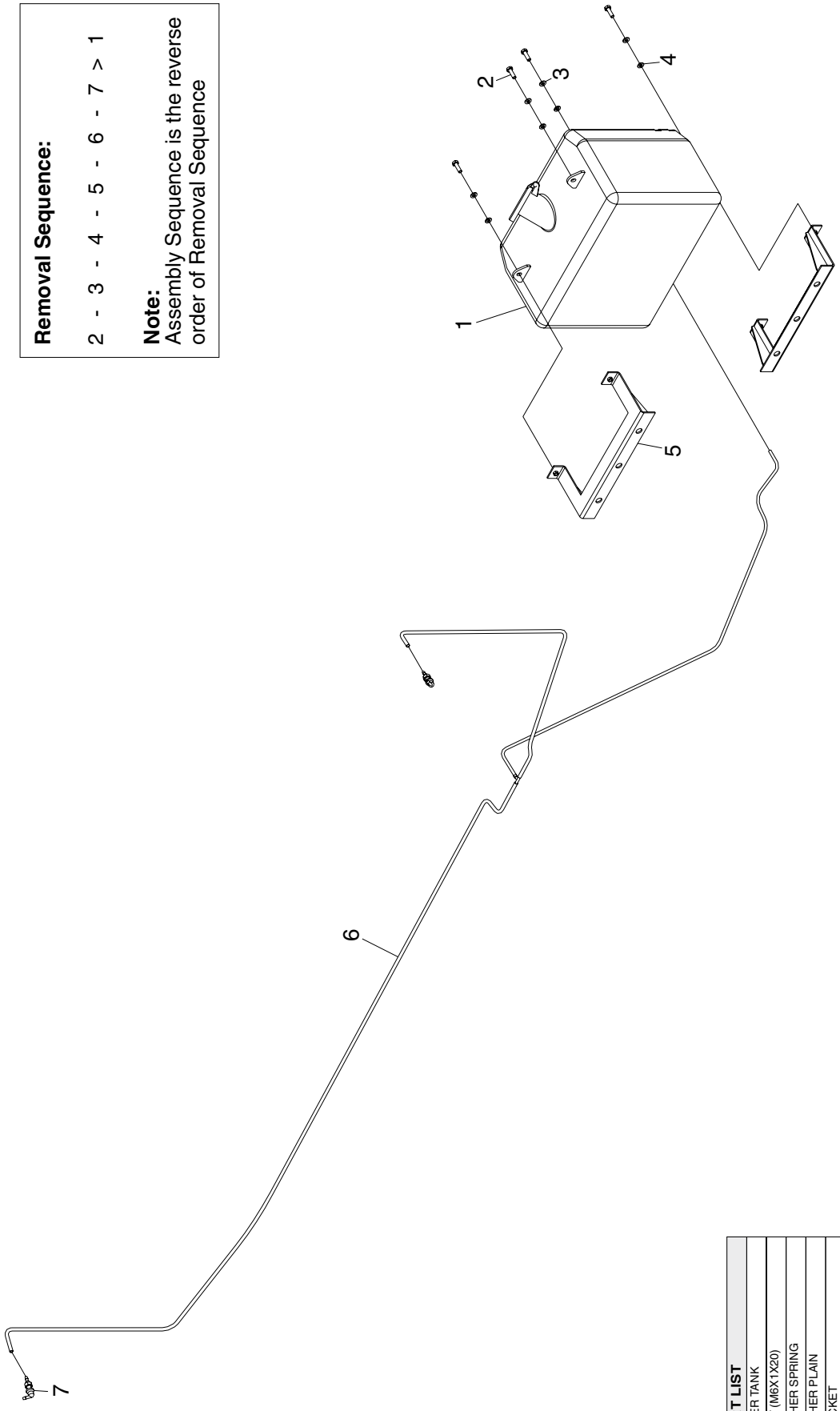

No	PART LIST
1	WATER TANK
2	BOLT (M6X1X20)
3	WASHER SPRING
4	WASHER PLAIN
5	BRACKET
6	HOSE
7	HOSE RAKOR

2.9. EXTERIOR MIRROR

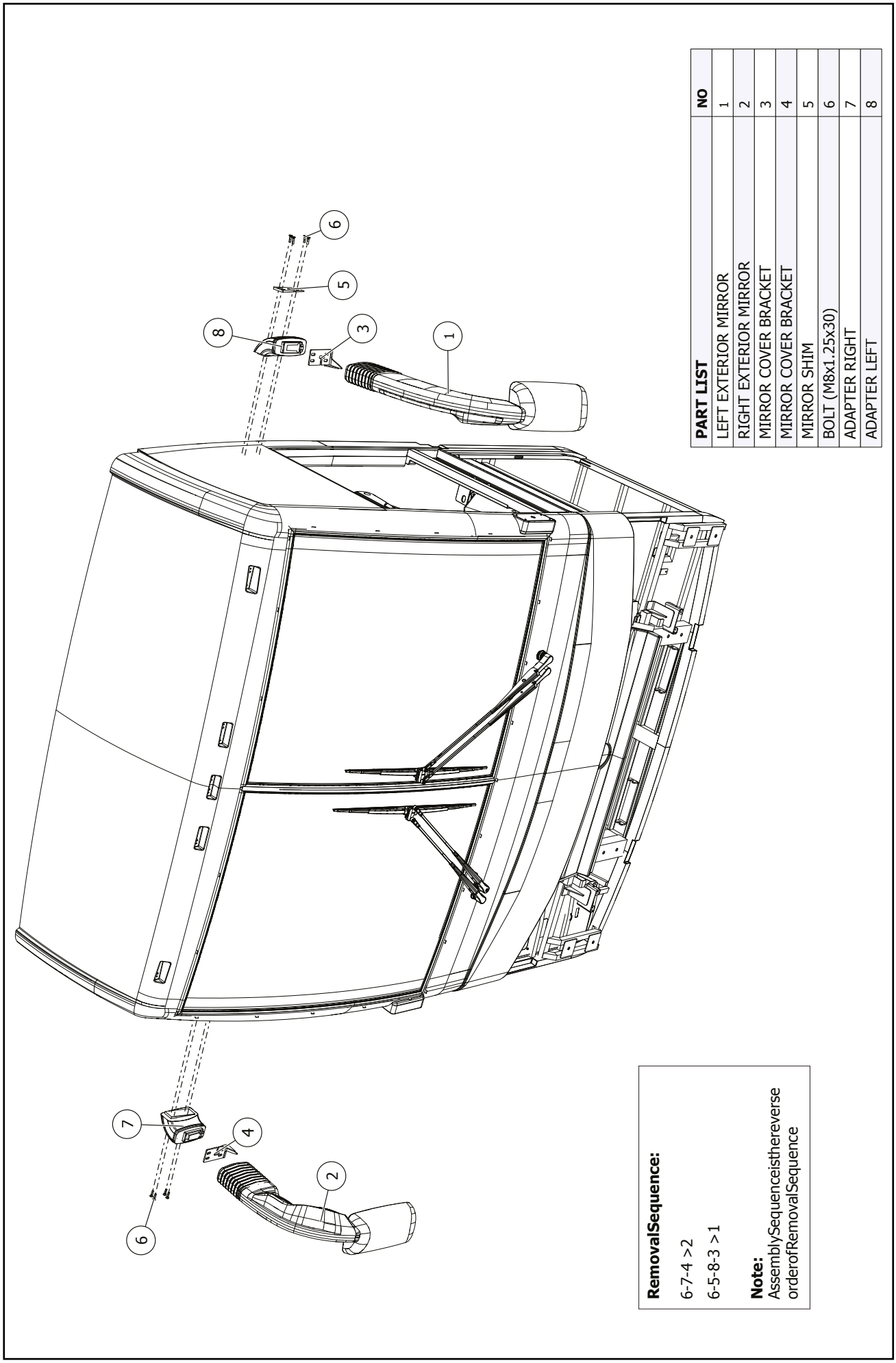

PART LIST	NO
LEFT EXTERIOR MIRROR	1
RIGHT EXTERIOR MIRROR	2
MIRROR COVER BRACKET	3
MIRROR COVER BRACKET	4
MIRROR SHIM	5
BOLT (M8x1.25x30)	6
ADAPTER RIGHT	7
ADAPTER LEFT	8

RemovalSequence:

6-7-4 >2

6-5-8-3 >1

Note:
AssemblySequenceisthereverse orderofRemovalSequence

2.10. FRONT BUMPER

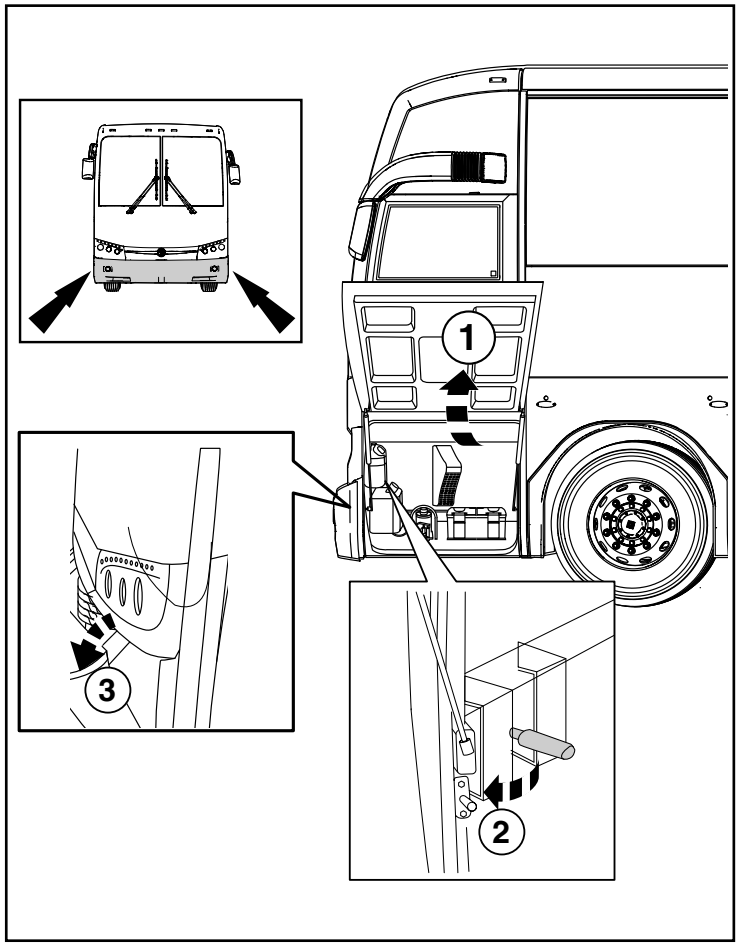

1. Open the front lid.
2. Pull handle to release front bumper.
3. Lower front bumper.

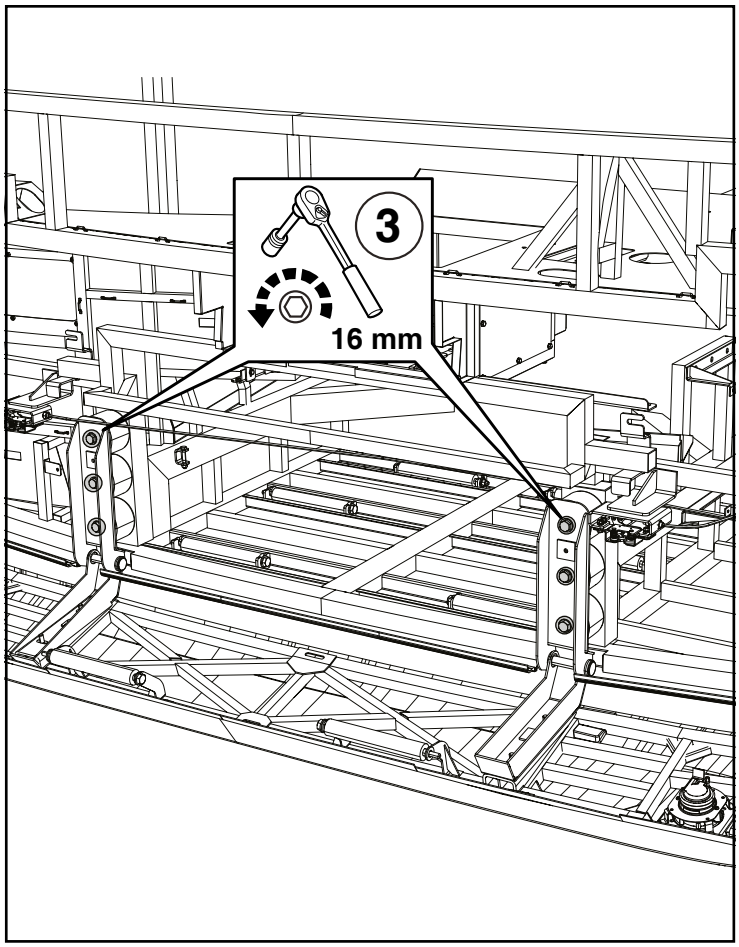

4. Unscrew the bolts and remove the bumper.

2.11. REAR BUMPER

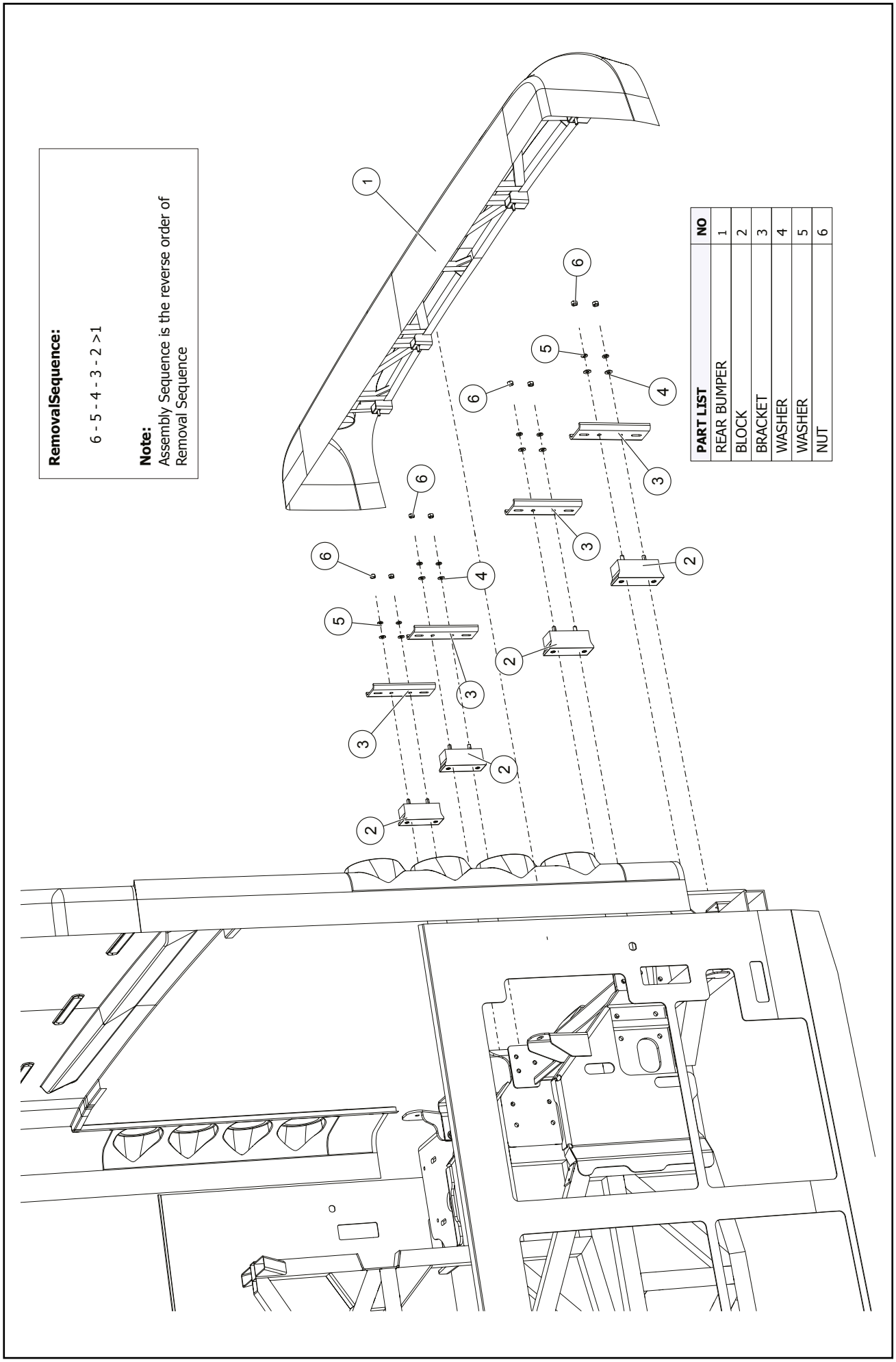

2.12. REAR HOOK

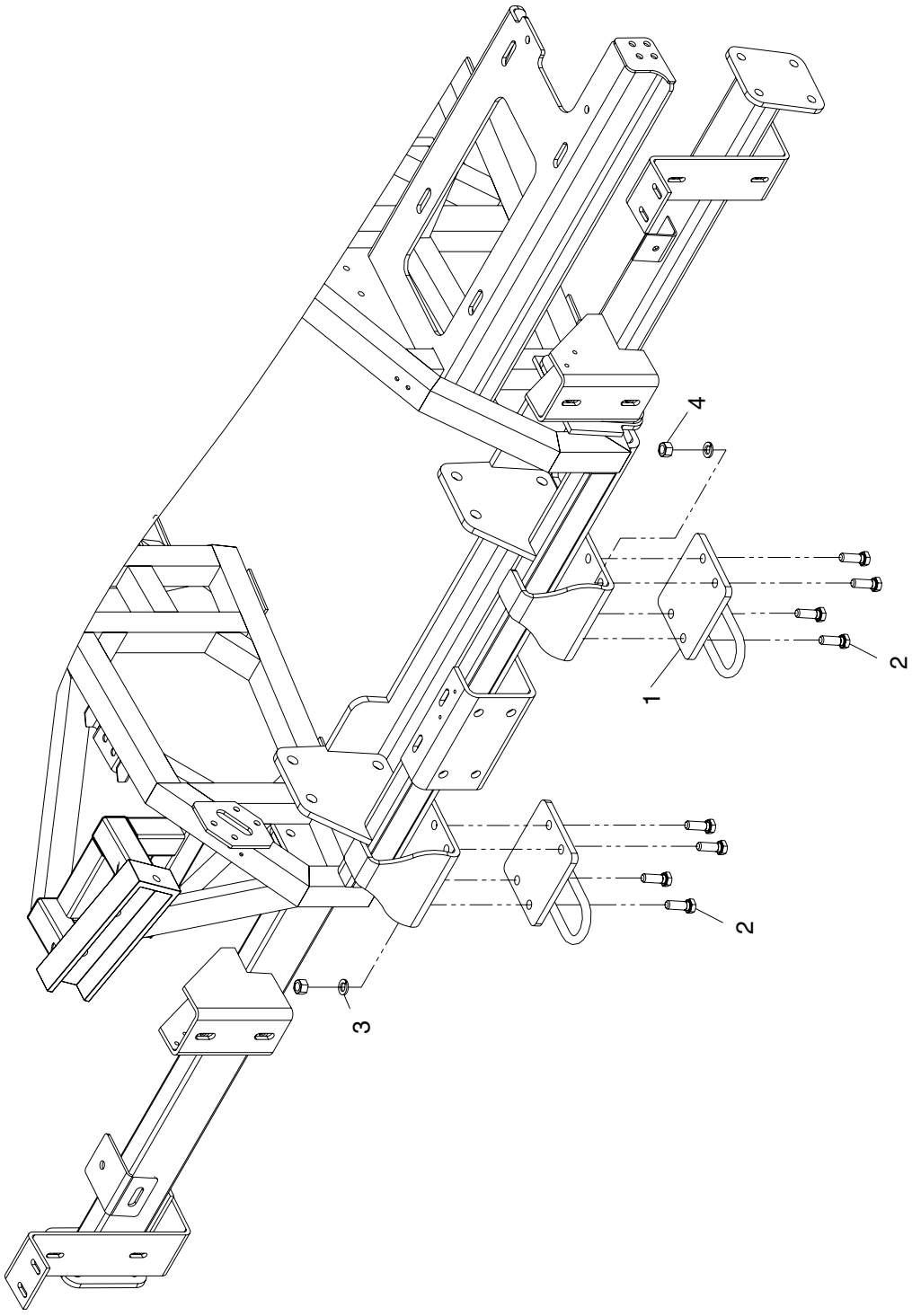

Removal Sequence:

2 - 3 - 4 > 1

Note:
Assembly Sequence is the reverse order of Removal Sequence

No	PART LIST
1	REAR HOOK
2	BOLT (M12X1.5X35)
3	WASHER PLAIN
4	NUT

2.13. SIDE PANELS

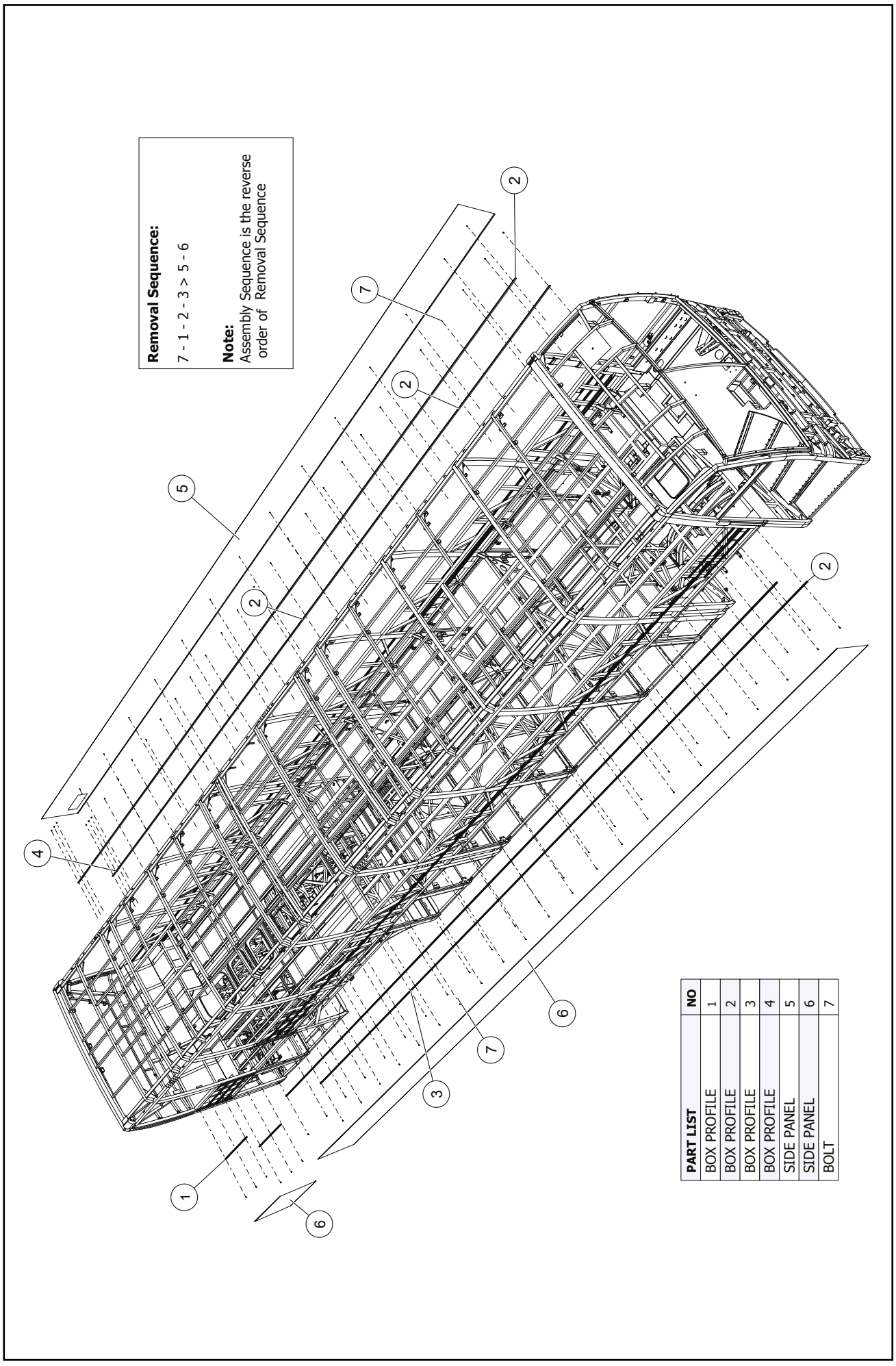

3. TIGHTENING TORQUES LIST

Quality	8.8		10.9		12.9	
	Nm	**Ft-Lbs**	**Nm**	**Ft-Lbs**	**Nm**	**Ft-Lbs**
M4	3	2.2	4,4	3.2	5	3.7
M5	5,9	4.4	8,7	6.4	10	7.4
M6	10	7.4	15	11.1	18	13.3
M8	25	18.4	36	26.6	43	31.7
M8 x 1,00	**22**	**16.2**	**30**	**22.1**	**36**	**26.6**
M10	49	36.1	72	53.1	84	62.0
M10 x 1,25	**42**	**31.0**	**59**	**43.5**	**71**	**52.4**
M12	85	62.7	125	92.2	145	107.0
M12 x 1,25	**76**	**56.1**	**105**	**77.4**	**130**	**95.9**
M14	135	99.6	200	147.5	235	173.3
M14 x 1,50	**120**	**88.5**	**165**	**121.7**	**200**	**147.5**
M16	210	154.9	310	228.7	365	269.2
M16 x 1,50	**180**	**132.8**	**250**	**184.4**	**300**	**221.3**
M18	300	221.3	430	317.2	500	368.8
M18 x 1,50	**260**	**191.8**	**365**	**269.2**	**435**	**320.9**
M20	425	313.5	610	449.9	710	523.7
M20 x 1,50	**360**	**265.5**	**510**	**376.2**	**610**	**449.9**
M22	580	427.8	820	604.8	960	708.1
M22 x 1,50	**480**	**354.0**	**680**	**501.6**	**810**	**597.5**
M24	730	538.4	1050	774.5	1220	899.9
M24 x 2,00	**610**	**449.9**	**860**	**634.3**	**1050**	**774.5**
M27	1100	811.4	1550	1143.3	1800	1327.7
M30	1450	1069.5	2100	1549.0	2450	1807.1
M33	1970	1453.1	2770	2043.1	3330	2456.2
M36	2530	1866.1	3560	2625.9	4280	3156.9

4. TROUBLESHOOTING

POSSIBLE CAUSES / SYMPTOMS			Tire tread worm									
				Jagged wear	Pitted wear (dented) all around	Dished wear (one or more spots)	Wavy wear	Feather-edged wear from inside to outside	Feather-edged wear from outside to inside	Inside worn	Outside worn	Center worn
Overloading			X									
Tire air pressure		Insufficient	X	X	X	X	X					
Excessive			X									X
Excessive	Toe-in	Wheel alignment L Gr26	X						X		X	
Insufficient			X							X		
Excessive	Camber		X								X	
Insufficient			X							X		
Toe-out excessive			X					X		X		
Overall misalignment			X		X	X	X	X	X	X	X	
Knuckle arm bent			X					X	X	X	X	
Left and right tie rod lengths different			X						X			
Wheel balance incorrect			X	X	X	X	X					
Wheel bearing loose			X	X	X	X	X					
Ball joint loose			X			X						
Tie rod end loose			X			X						
Brake drum eccentric			X		X	X						
Axle bent			X			X						
Sudden starting, hard braking or sharp turn			X		X	X						
Left and right front wheel turning radius incorrect			X	X								
Road surface influence			X							X	X	

25 BODY STRUCTURE

Rev.00 / 25.03.14

1. TOOLS **1**
2. STRUCTURE AND OPERATION **2**
2.1. Corrosion And Preventive 2
2.2. Underbody Coating 3

GENERAL

- If work is performed by people who do not have the necessary training to carry out the work or if this information is handled carelessly or totally ignored, this may result in severe injury and/or death. Inaddition, serious damage to the vehicle may occur.
- Always read the safety instructions in full before starting certain operations. The safety instructions stipulate which aspects must be considered to achieve maximum safety. The information is given that is very important for health and safety.
- Always work in adequately ventilated rooms with sufficient lighting, free from dirt and clutter. Never leave tools or parts lying around, keep away from (high-) voltage sources that present a risk of short-circuiting. Always wear protective clothing. Do not wear any damaged or loose-fitting clothing and remove jewelry before starting the work. In case of long hair use hairnet.

1. TOOLS

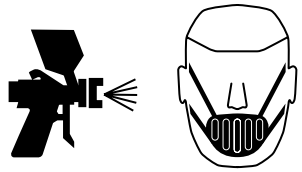 Spray Gun	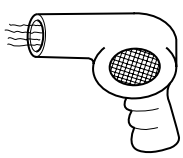 Dryer	

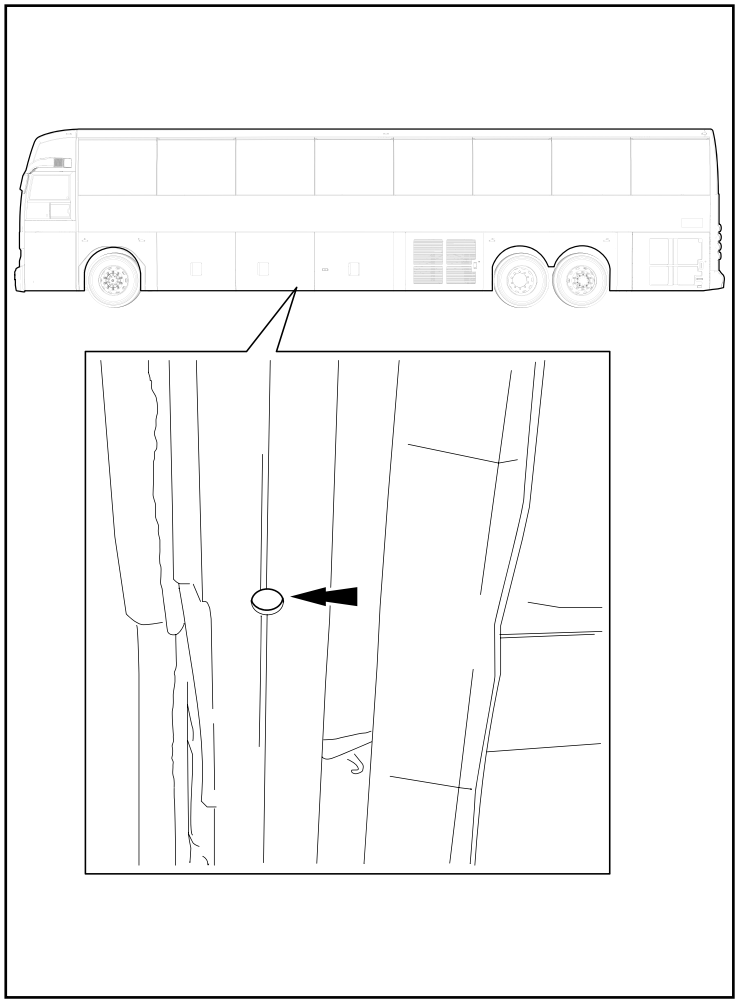

2. STRUCTURE AND OPERATION

2.1. CORROSION AND PREVENTIVE

As a corrosion preventive precaution in the top construction, the empty spaces listed below are filled with insulation material (wax):

- Doors
- All profiles
- All front and vertical pillars

Above preventive precautions should be applied with 3 years period. Under body of the vehicle there are some holes to apply wax.

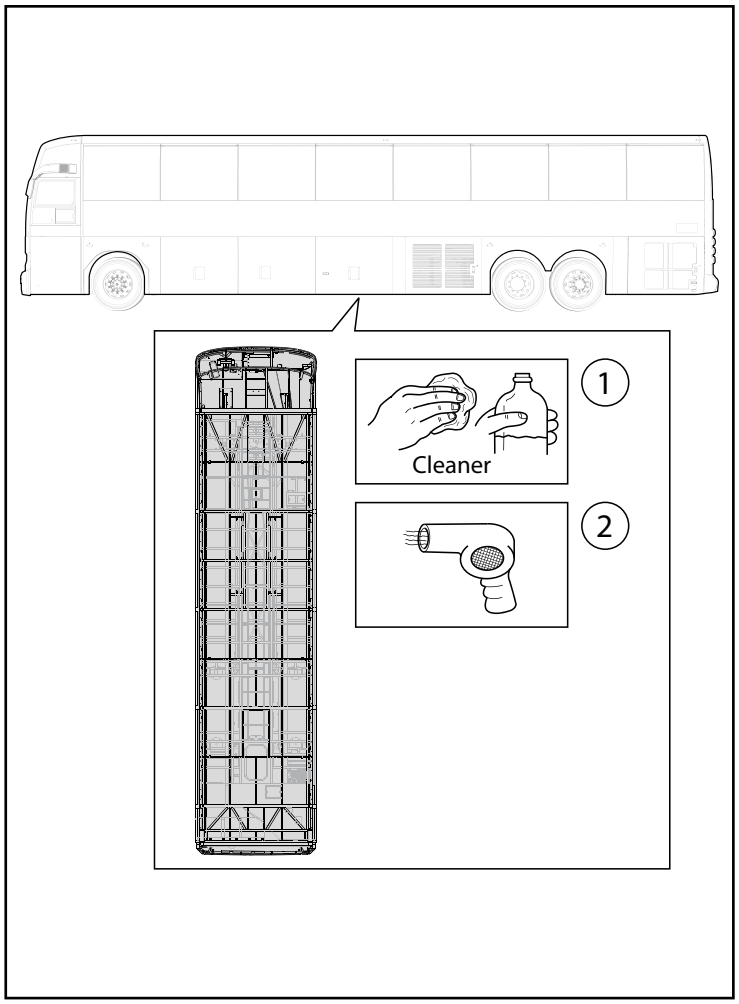

The prelimiary precautions defined below should be made as corrosion preventive precautions.

1. Clean the underbody of the vehicle.
2. Dry the underbody of the vehicle.

CAUTION

- Do not use cleaning material which can dissolve isolation materials e.g. gasoline.
- If it is possible dry the vehicle in the oven (about 104 °F).

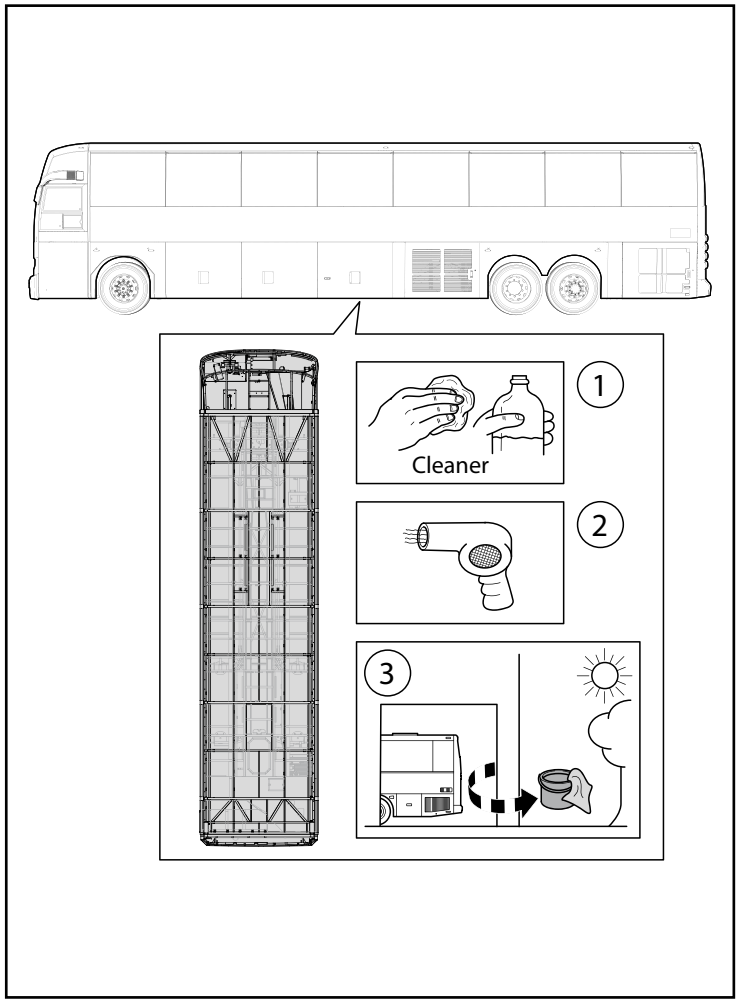

2.2. UNDERBODY COATING

Underbody of the vehicle is protected with underbody coating. The preventive precautions should be carried out every 3 years.
The preliminary precautations defined below should be made as corrosion preventive precautions:

1. Clean the bottom of the vehicle. Do not use cleaning precautions which can dissolve isolation materials e.g. gasoline, cold cleaner, etc.
2. Dry the bottom of vehicle.
3. Remove the cleaning material in empty spaces using air.

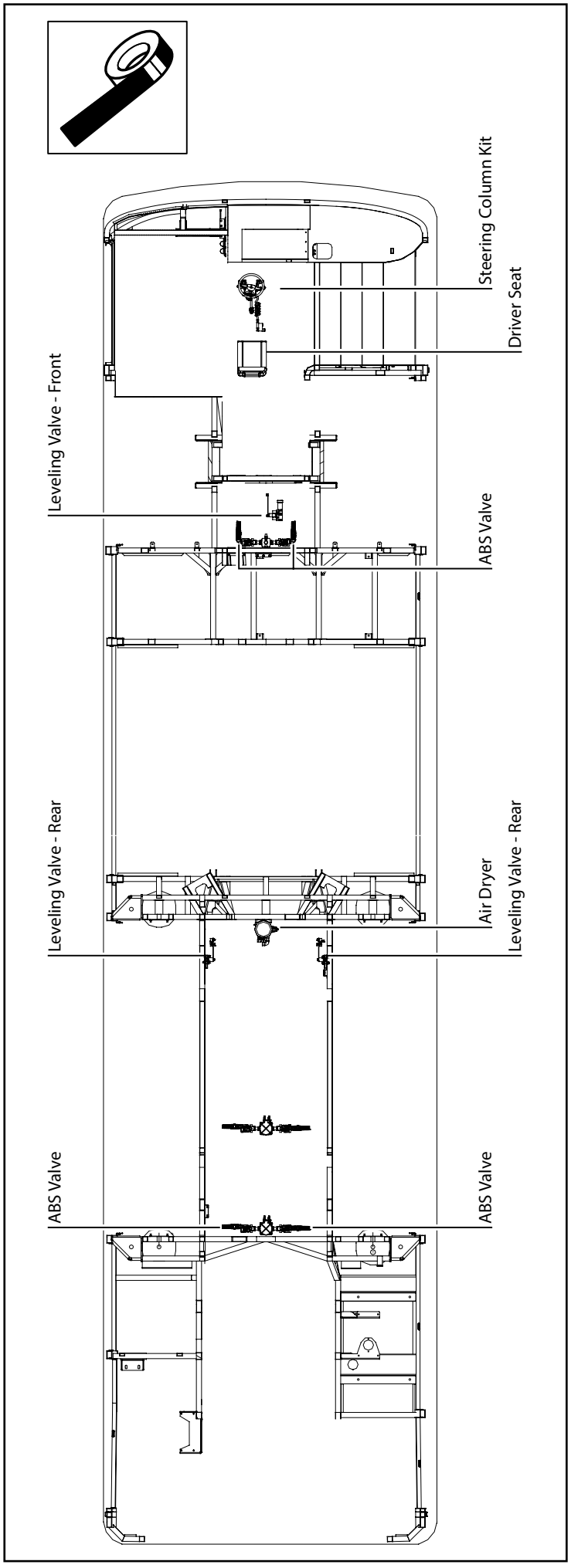

2.2. UNDERBODY COATING

If it is possible, before drying leave the vehicle in paint drying oven at average temperature (below 104 °F).

To prevent function failures cover the vehicle parts defined below with average tape Brake valves air outlet:

- Levelig valves air outlet
- ABS valves air outlet
- Leveling
- Steering
- Air dryer

CAUTION

Check underbody every year. If there is any damage on the underbody please rewax applying underbody coating again.

WARNING

- Danger of explosion and poison because of solvent material vapors and gases.
- Danger of injury for skin and eyes while working with corrosion preventive materials.

26 ENGINE ROOM FIRE EXTINGUISHER

Rev.00 / 25.03.14

1. TOOLS 1

2. SERVICE PROCEDURE 2

2.1. Removing The Fire Extinguisher For Engine Room 2

2.1.1 Installing The Fire Extinguisher For Engine Room 3

GENERAL

- If work is performed by people who do not have the necessary training to carry out the work or if this information is handled carelessly or totally ignored, this may result in severe injury and/or death. Inaddition, serious damage to the vehicle may occur.
- Always read the safety instructions in full before starting certain operations. The safety instructions stipulate which aspects must be considered to achieve maximum safety. The information is given that is very important for health and safety.
- Always work in adequately ventilated rooms with sufficient lighting, free from dirt and clutter. Never leave tools or parts lying around, keep away from (high-) voltage sources that present a risk of short-circuiting. Always wear protective clothing. Do not wear any damaged or loose-fitting clothing and remove jewelry before starting the work. In case of long hair use hairnet.

1. TOOLS

	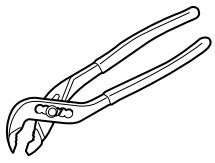	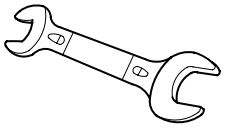
Allen Key	Adjustable Wrench	Open Wrench Double Ended

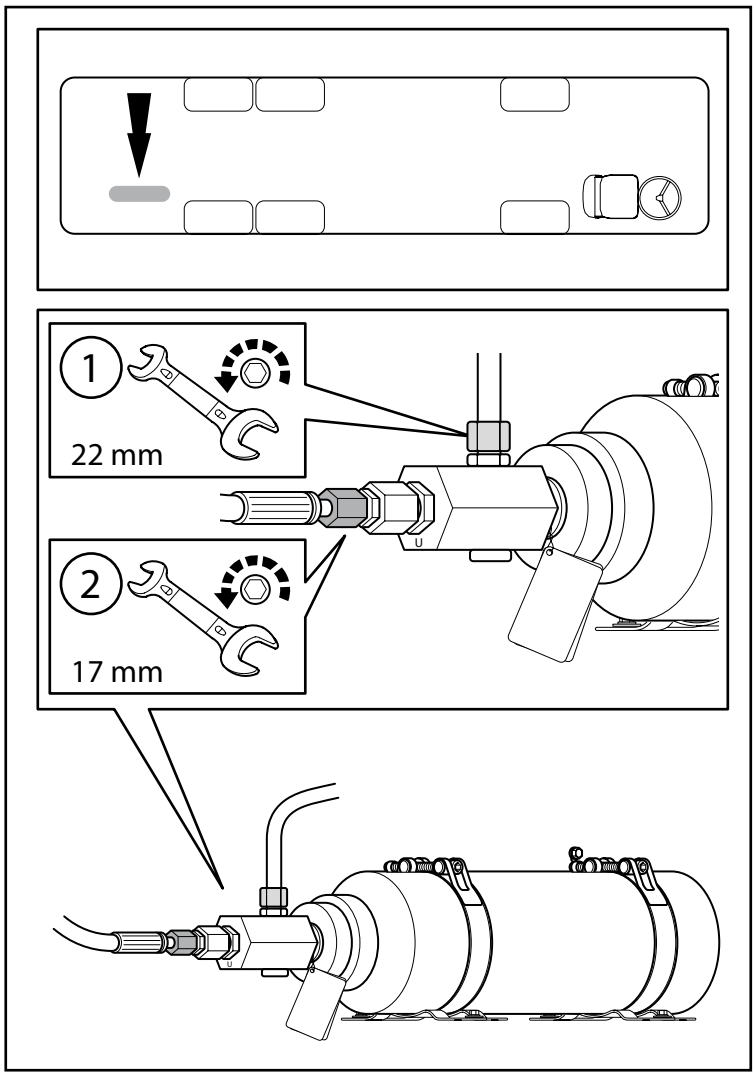

2. SERVICE PROCEDURE

2.1. REMOVING THE FIRE EXTINGUISHER FOR ENGINE ROOM

1. Remove top hose by unscrewing nut (tool size: 22mm).
2. Remove left pipe by unscrewing nut (tool size: 17 mm).

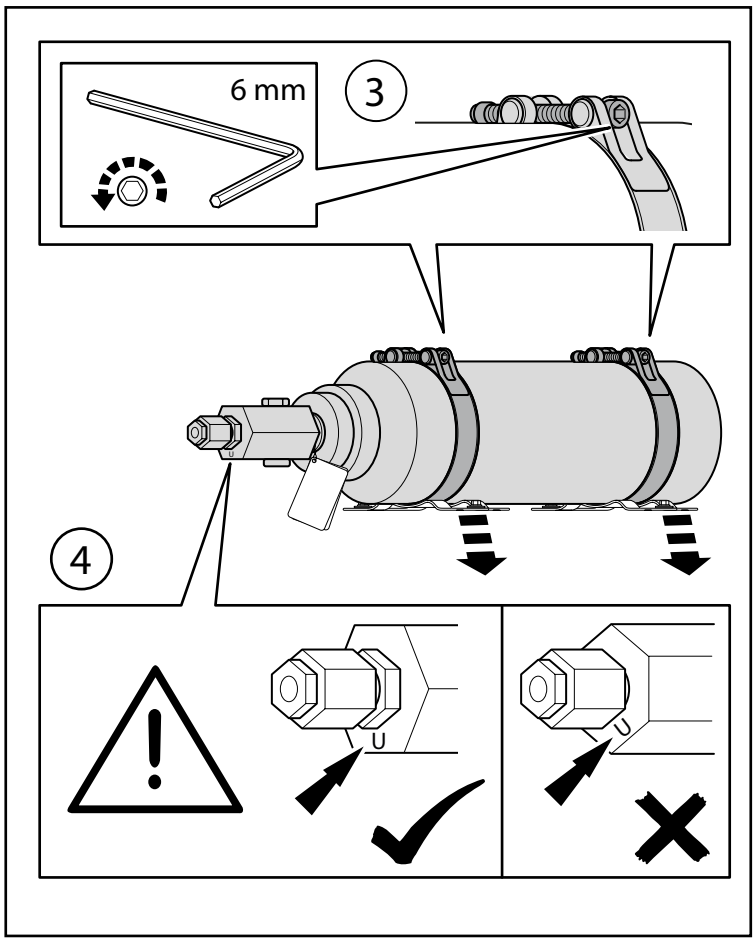

3. Remove 2 clamps with allen key (tool size: 6 mm).
4. Remove bottle, don't turn! Be aware that the letter U shows upwards, risk of leakage.

WARNING

Don't turn the bottle while removing! Be aware that the letter U shows upwards, risk of leakage.

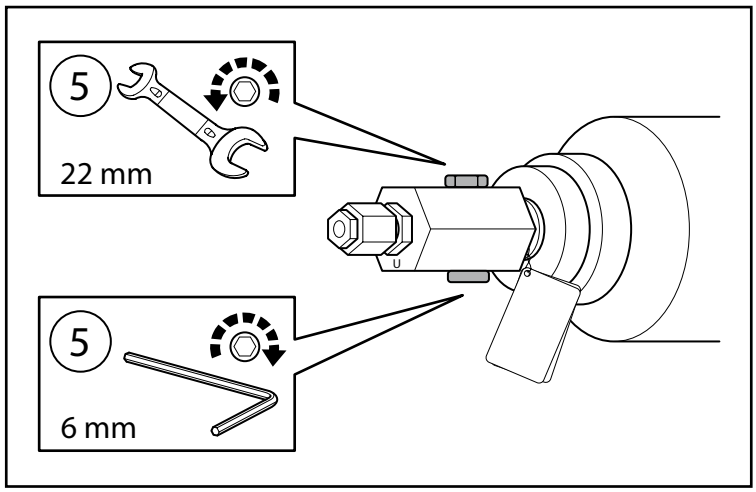

2.1. REMOVING THE FIRE EXTINGUISHER FOR ENGINE ROOM

5. For replacing the bottle remove top fitting-adapter for assembling by loosening the fixation in opposite direction (tool size: 22 mm / allen key: 6 mm).

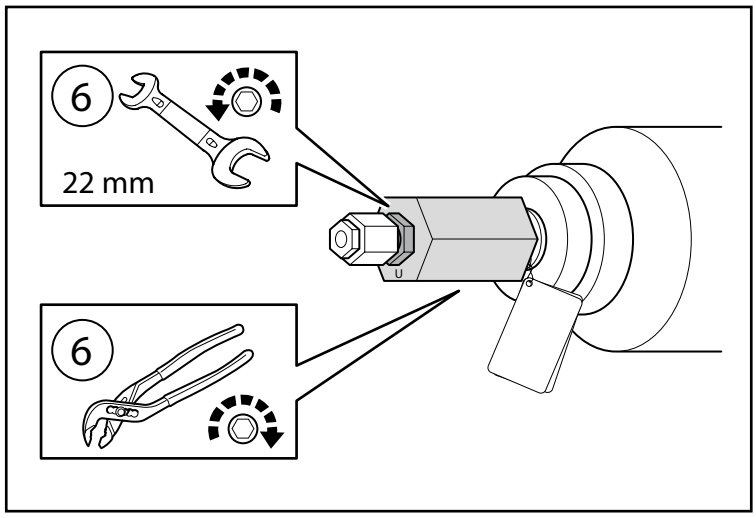

6. Remove left fitting-adapter for assembling by loosening the nuts in opposite direction (tool size: 22 mm).

CAUTION

Don't throw away any nuts, they will be reused for installing!

2.1.1 INSTALLING THE FIRE EXTINGUISHER FOR ENGINE ROOM

The installation sequence is the reverse order of the removal sequence.

CAUTION

The engine room fire extinguisher has to be annually checked. For more information see technical documentation supplied. This annual check must be performed by authorized personal.